Cat. No. W365-E1-02

SYSMAC
CQM1H Series

CQM1H-SCB41
Serial Communications Board

OPERATION MANUAL

OMRON

SYSMAC
CQM1H Series
CQM1H-SCB41
Serial Communications Board
Operation Manual

Revised April 2002

Notice:

OMRON products are manufactured for use according to proper procedures by a qualified operator and only for the purposes described in this manual.

The following conventions are used to indicate and classify precautions in this manual. Always heed the information provided with them. Failure to heed precautions can result in injury to people or damage to property.

⚠DANGER Indicates an imminently hazardous situation which, if not avoided, will result in death or serious injury.

⚠WARNING Indicates a potentially hazardous situation which, if not avoided, could result in death or serious injury.

⚠Caution Indicates a potentially hazardous situation which, if not avoided, may result in minor or moderate injury, or property damage.

OMRON Product References

All OMRON products are capitalized in this manual. The word “Unit” is also capitalized when it refers to an OMRON product, regardless of whether or not it appears in the proper name of the product.

The abbreviation “Ch,” which appears in some displays and on some OMRON products, often means “word” and is abbreviated “Wd” in documentation in this sense.

The abbreviation “PC” means Programmable Controller and is not used as an abbreviation for anything else.

Visual Aids

The following headings appear in the left column of the manual to help you locate different types of information.

Note Indicates information of particular interest for efficient and convenient operation of the product.

1,2,3... 1. Indicates lists of one sort or another, such as procedures, checklists, etc.

© OMRON, 1999

All rights reserved. No part of this publication may be reproduced, stored in a retrieval system, or transmitted, in any form, or by any means, mechanical, electronic, photocopying, recording, or otherwise, without the prior written permission of OMRON.

No patent liability is assumed with respect to the use of the information contained herein. Moreover, because OMRON is constantly striving to improve its high-quality products, the information contained in this manual is subject to change without notice. Every precaution has been taken in the preparation of this manual. Nevertheless, OMRON assumes no responsibility for errors or omissions. Neither is any liability assumed for damages resulting from the use of the information contained in this publication.

TABLE OF CONTENTS

PRECAUTIONS . . . . . **xi**

1 Intended Audience xii
2 General Precautions xii
3 Safety Precautions xii
4 Operating Environment Precautions xiii
5 Application Precautions xiii
6 Conformance to EC Directives xv

SECTION 1
Introduction **1**

1-1 Overview 2
1-2 Protocol Overview 4
1-3 Specifications 8
1-4 Basic Operating Procedure 8

SECTION 2
Board Components and Installation **9**

2-1 Component Names and Functions 10
2-2 Installation 14
2-3 Wiring 17

SECTION 3
Default Settings and Related Bits/Flags **27**

3-1 Overview 28
3-2 PC Setup Settings 28
3-3 Control Bits, Flags, and Status Information 30

SECTION 4
Host Link Communications **33**

4-1 Host Link Communications 34
4-2 Application Procedure 36
4-3 Connections 39
4-4 Host Link Communications 45
4-5 Changes from Previous Products 53

SECTION 5
Protocol Macros **57**

5-1 Overview of the Protocol Macro Functions 58
5-2 Restrictions in Using the CX-Protocol 65
5-3 Application Procedure 66
5-4 Connections 70
5-5 Protocol Structure 76
5-6 Control Bits, Flags, and Status Information 80
5-7 Using Protocol Macros 84

SECTION 6
No-protocol Communications **99**

6-1 Overview 100
6-2 Application Procedure 102
6-3 Connections 103
6-4 Using No-protocol Communications 104

TABLE OF CONTENTS

SECTION 7
Communications for 1:1 Data Links. 109

7-1 Overview 110
7-2 Application Procedure. 111
7-3 Connections. 112
7-4 Using 1:1 Data Links 113

SECTION 8
NT Link Communications 115

8-1 Overview of NT Links 116
8-2 Application Procedure. 118
8-3 Connections. 119

SECTION 9
Troubleshooting and Maintenance 121

9-1 Front-panel Indicator Error Displays 122
9-2 Troubleshooting 124
9-3 Cleaning and Inspection 133
9-4 Board Replacement. 135

Appendices

A Introduction 137
B CompoWay/F Master Protocol 139
C E5□K Digital Controller Read Protocol 155
D E5□K Digital Controller Write Protocol 173
E E5ZE Temperature Controller Read Protocol 189
F E5ZE Temperature Controller Write Protocol 211
G E5□J Temperature Controller Protocol 231
H ES100□ Digital Controller Protocol 245
I K3T□ Intelligent Signal Processor Protocol 285
J V500/V520 Bar Code Reader Protocol 307
K 3Z4L Laser Micrometer Protocol 319
L Visual Inspection System Protocol 349
M V600/V620 ID Controller Protocol 367
N Hayes Modem AT Command Protocol 403

Index 411

Revision History 419

About this Manual:

This manual describes the installation and operation of the SYSMAC CQM1H-series CQM1H-SCB41 Serial Communications Board and includes the sections described below.

The Serial Communications Board is classified as an Inner Board.

Read this manual and all related manuals listed in the following table carefully and be sure you understand the information provided before attempting to install and operate a Serial Communications Board.

Name	Cat. No.	Contents
SYSMAC CQM1H-series CQM1H-SCB41 Serial Communications Board Operation Manual	W365-E1-1	Describes the use of the Serial Communications Board to perform serial communications with external devices, including hardware and the usage of standard system protocols for OMRON products. Host Link communications commands are described in the *SYSMAC CQM1H-series Programmable Controllers Programming Manual (W364)*. Creating protocol macros is described in the *CX-Protocol Operation Manual (W344)*.
SYSMAC CQM1H-series Programmable Controllers Operation Manual	W363-E1-1	Describes the installation and operation of the CQM1H-series PCs.
SYSMAC CQM1H-series Programmable Controllers Programming Manual	W364-E1-1	Describes the ladder diagram programming instructions supported by CQM1H-series PCs, Host Link commands, and other programming information.
SYSMAC WS02-PSTC1-E CX-Protocol Operation Manual	W344-E1-1	Describes the use of the CX-Protocol to create protocol macros as communications sequences to communicate with external devices.

Section 1 introduces the hardware and software functions of the Serial Communications Board, including the serial communications modes, system configurations, and specifications.

Section 2 describes the components of the Serial Communications Board, how to connect it in the CPU Unit, and how to connect it to external devices.

Section 3 describes the settings, control bits, flags, and status information available in the CPU Unit for use with the Serial Communications Board.

Section 4 describes the procedure and other information required to use Host Link communications.

Section 5 describes the procedure and other information required to use protocol macros.

Section 6 provides information required to use no-protocol communications on a Serial Communications Board port.

Section 7 provides information required to create 1:1 data links through a Serial Communications Board port.

Section 8 describes the procedure and other information required to use 1:N-mode and 1:1-mode NT Links to Programmable Terminals (PTs).

Section 9 describes the troubleshooting and maintenance procedures for the Serial Communications Boards.

Appendix A to ***Appendix N*** provide the specifications of the standard system protocols.

> ⚠ **WARNING** Failure to read and understand the information provided in this manual may result in personal injury or death, damage to the product, or product failure. Please read each section in its entirety and be sure you understand the information provided in the section and related sections before attempting any of the procedures or operations given.

PRECAUTIONS

This section provides general precautions for using the Serial Communications Boards.

The information contained in this section is important for the safe and reliable application of the Serial Communications Boards and the PC in general. You must read this section and understand the information contained before attempting to set up or operate a PC system containing a Serial Communications Board.

1 Intended Audience xii
2 General Precautions xii
3 Safety Precautions xii
4 Operating Environment Precautions xiii
5 Application Precautions xiii
6 Conformance to EC Directives xv
6-1 Applicable Directives xv

1 Intended Audience

This manual is intended for the following personnel, who must also have knowledge of electrical systems (an electrical engineer or the equivalent).

- Personnel in charge of installing FA systems.
- Personnel in charge of designing FA systems.
- Personnel in charge of managing FA systems and facilities.

2 General Precautions

The user must operate the product according to the performance specifications described in the operation manuals.

Before using the product under conditions which are not described in the manual or applying the product to nuclear control systems, railroad systems, aviation systems, vehicles, combustion systems, medical equipment, amusement machines, safety equipment, and other systems, machines, and equipment that may have a serious influence on lives and property if used improperly, consult your OMRON representative.

Make sure that the ratings and performance characteristics of the product are sufficient for the systems, machines, and equipment, and be sure to provide the systems, machines, and equipment with double safety mechanisms.

This manual provides information for programming and operating the Unit. Be sure to read this manual before attempting to use the Unit and keep this manual close at hand for reference during operation.

⚠WARNING It is extremely important that a Serial Communications Board and all related units be used for the specified purpose and under the specified conditions, especially in applications that can directly or indirectly affect human life. You must consult with your OMRON representative before applying a Serial Communications Board to the above mentioned applications.

3 Safety Precautions

⚠WARNING Never attempt to disassemble any Units while power is being supplied. Doing so may result in electric shock.

⚠WARNING The CPU Unit refreshes I/O even when the program is stopped (i.e., even in PROGRAM mode). Confirm safety thoroughly in advance before changing the status of any part of memory allocated to I/O Units, Inner Boards, or Dedicated I/O Units. Any changes to the data allocated to any Unit may result in unexpected operation of the loads connected to the Unit. Any of the following operation may result in changes to memory status.

- Transferring I/O memory data to the CPU Unit from a Programming Device.
- Changing present values in memory from a Programming Device.
- Force-setting/-resetting bits from a Programming Device.
- Transferring I/O memory files from a Memory Card or EM file memory to the CPU Unit.
- Transferring I/O memory from a host computer or from another PC on a network.

⚠WARNING Never touch any of the terminals while power is being supplied. Doing so may result in electric shock.

⚠Caution Execute online edit only after confirming that no adverse effects will be caused by extending the cycle time. Otherwise, input signals may not be read properly.

4 Operating Environment Precautions

⚠ **Caution** Do not operate the control system in the following locations:

- Locations subject to direct sunlight.
- Locations subject to temperatures or humidity outside the range specified in the specifications.
- Locations subject to condensation as the result of severe changes in temperature.
- Locations subject to corrosive or flammable gases.
- Locations subject to dust (especially iron dust) or salts.
- Locations subject to exposure to water, oil, or chemicals.
- Locations subject to shock or vibration.

⚠ **Caution** Take appropriate and sufficient countermeasures when installing systems in the following locations:

- Locations subject to static electricity or other forms of noise.
- Locations subject to strong electromagnetic fields.
- Locations subject to possible exposure to radioactivity.
- Locations close to power supplies.

⚠ **Caution** The operating environment of the PC System can have a large effect on the longevity and reliability of the system. Improper operating environments can lead to malfunction, failure, and other unforeseeable problems with the PC System. Be sure that the operating environment is within the specified conditions at installation and remains within the specified conditions during the life of the system.

5 Application Precautions

Observe the following precautions when using the PC.

⚠ **WARNING** Failure to abide by the following precautions could lead to serious or possibly fatal injury. Always heed these precautions.

- Always ground the system to 100 Ω or less when installing the system to protect against electrical shock.
- Always turn OFF the power supply to the PC before attempting any of the following. Not turning OFF the power supply may result in malfunction or electric shock.
  - Mounting or dismounting a Power Supply Unit, I/O Unit, CPU Unit, or Memory Cassette.
  - Assembling the Units or mounting the Serial Communications Board.
  - Setting DIP switches or rotary switches.
  - Connecting or wiring the cables.
  - Connecting or disconnecting the connectors.

⚠ **Caution** Failure to abide by the following precautions could lead to faulty operation or the PC or the system or could damage the PC or PC Units. Always heed these precautions.

- Do not turn OFF the power supply while transferring protocol macro data.

- Fail-safe measures must be taken by the customer to ensure safety in the event of incorrect, missing, or abnormal signals caused by broken signal lines, momentary power interruptions, or other causes.
- Always discharge static electricity by touching a grounded metal part before mounting the Serial Communications Board.
- Always discharge static electricity by touching a grounded metal part before connecting cable connectors to RS-232C or RS-422A/485 port of the Serial Communications Board.
- Be sure that the connectors, terminal blocks, expansion cables, and other items with locking devices are properly locked into place. Improper locking may result in malfunction.
- Confirm that no adverse effect will occur in the system before attempting any of the following. Not doing so may result in an unexpected operation.
  - Changing the operating mode of the PC.
  - Force-setting/force-resetting any bit in memory.
  - Changing the present value of any word or any set value in memory.
- Take appropriate measures to ensure that the specified power with the rated voltage and frequency is supplied. Be particularly careful in places where the power supply is unstable. An incorrect power supply may result in malfunction.
- Leave the label attached to the Unit when wiring. Removing the label may result in malfunction if foreign matter enters the Unit.
- Remove the label after the completion of wiring to ensure proper heat dissipation. Leaving the label attached may result in malfunction.
- Confirm polarities before connecting RS-422A/485 cables. Some devices require that SDA/B and RDA/B or signal polarities be reversed.
- Double-check all wiring and switch settings before turning ON the power supply. Incorrect wiring may result in burning.
- Check the user programming (ladder program, protocol macro data, etc.) for proper execution before actually running it on the Unit. Not checking the program may result in an unexpected operation.
- Resume operation only after transferring to the new CPU Unit the contents of the DM Area, HR Area, and other data required for resuming operation. Not doing so may result in an unexpected operation.
- Circuit boards have sharp or pointed edges, such as those on the leads of electrical parts. Do not touch the back of printed boards or mounted sections with your bare hands.
- Connect or set terminating resistance correctly when using RS-422A/485 cables.
- During transportation and storage, cover the circuit boards with conductive materials to prevent them from being damaged by static electricity caused by LSIs or ICs and keep them within the specified storage temperature.
- Refer to *Section 2 Board Components and Installation* and correctly wire and install the Units.
- Do not attempt to take any Units apart, to repair any Units, or to modify any Units in any way.
- Disconnect the functional ground terminal when performing withstand voltage tests. Not disconnecting the functional ground terminal may result in burning.

6 Conformance to EC Directives

6-1 Applicable Directives

- EMC Directives
- Low Voltage Directive

6-1-1 Concepts

EMC Directives

OMRON devices that comply with EC Directives also conform to the related EMC standards so that they can be more easily built into other devices or machines. The actual products have been checked for conformity to EMC standards (see the following note). Whether the products conform to the standards in the system used by the customer, however, must be checked by the customer.

EMC-related performance of the OMRON devices that comply with EC Directives will vary depending on the configuration, wiring, and other conditions of the equipment or control panel in which the OMRON devices are installed. The customer must, therefore, perform final checks to confirm that devices and the overall machine conform to EMC standards.

Note Applicable EMC (Electromagnetic Compatibility) standards are as follows:

EMS (Electromagnetic Susceptibility): EN61131-2
EMI (Electromagnetic Interference): EN50081-2
(Radiated emission: 10-m regulations)

Low Voltage Directive

Always ensure that devices operating at voltages of 50 to 1,000 VAC or 75 to 1,500 VDC meet the required safety standards for the PC (EN61131-2).

6-1-2 Conformance to EC Directives

The CQM1H-series PCs comply with EC Directives. To ensure that the machine or device in which a CQM1H-series PC is used complies with EC directives, the PC must be installed as follows:

1,2,3...

1. The PC must be installed within a control panel.
2. Reinforced insulation or double insulation must be used for the DC power supplies used for the I/O power supplies.
3. PCs complying with EC Directives also conform to the Common Emission Standard (EN50081-2). When a PC is built into a machine, however, noise can be generated by switching devices using relay outputs and cause the overall machine to fail to meet the Standards. If this occurs, surge killers must be connected or other measures taken external to the PC.

   The following methods represent typical methods for reducing noise, and may not be sufficient in all cases. Required countermeasures will vary depending on the devices connected to the control panel, wiring, the configuration of the system, and other conditions.

6-1-3 EMI Measures

The CQM1H-series PCs conform to the Common Emission Standards (EN50081-2) of the EMC Directives. However, the noise generated from Serial Communications Board communications cables may not satisfy these standards. In such a case, commercially available ferrite cores must be placed on the communications cable or other appropriate countermeasures must be provided external to the PC.

Recommended Ferrite Cores

The following ferrite core (data line noise filter) is recommended:
0443-164151 by Fair-Rite Products Corp.
Low impedance, 25 MHz: 90 Ω, 100 MHz: 160 Ω

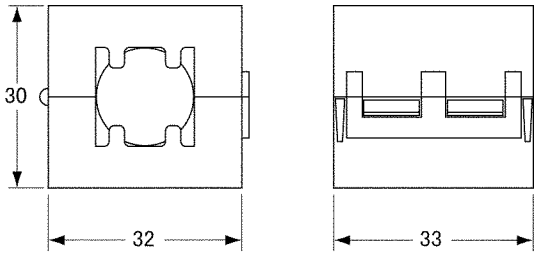

Recommended Mounting Method

Mount the core on one turn of the communications cable, as shown in the following illustration.

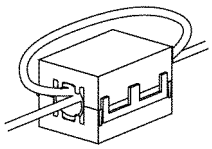

Mount the cores as closely to the end of the communications cable as possible, as shown in the following illustration.

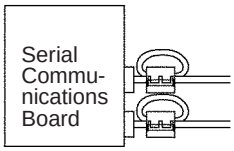

SECTION 1
Introduction

This section introduces the hardware and software functions of the Serial Communications Board, including the serial communications modes, system configurations, and specifications.

1-1 Overview 2
1-1-1 Model Number 2
1-1-2 Serial Communications Boards 2
1-1-3 Features 2
1-1-4 System Configuration. 3
1-1-5 Mounting Location. 4
1-2 Protocol Overview 4
1-2-1 Host Link Mode 5
1-2-2 Protocol Macros 5
1-2-3 No-protocol Communications 6
1-2-4 PC 1:1 Data Links 6
1-2-5 NT Links — 1:N Mode 7
1-2-6 NT Links — 1:1 Mode. 7
1-3 Specifications 8
1-3-1 Serial Communications Board 8
1-3-2 General Specifications 8
1-4 Basic Operating Procedure 8

1-1 Overview

1-1-1 Model Number

Name	Model	Specifications
Serial Communications Board	CQM1H-SCB41	One RS-232 port One RS-422A/485 port

1-1-2 Serial Communications Boards

The Serial Communications Board is an Inner Board for the CQM1H-series PCs. One Board can be installed in Inner Board slot 1 of a CQM1H-series CPU Unit. The Board cannot be installed in slot 2.

The Board provides two serial communications ports for connecting host computers, Programmable Terminals (PTs), general-purpose external devices, and Programming Devices (excluding Programming Consoles). This makes it possible to easily increase the number of serial communications ports for a CQM1H-series PC.

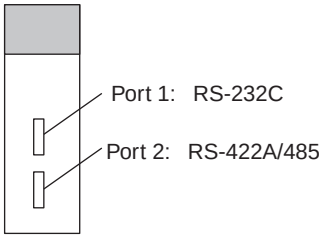

1-1-3 Features

The Serial Communications Board is an option that can be mounted in the CPU Unit to increase the number of serial ports without using an I/O slot. It supports protocol macros (which are not supported by the ports built into the CPU Units), allowing easy connection to general-purpose devices that have a serial port.

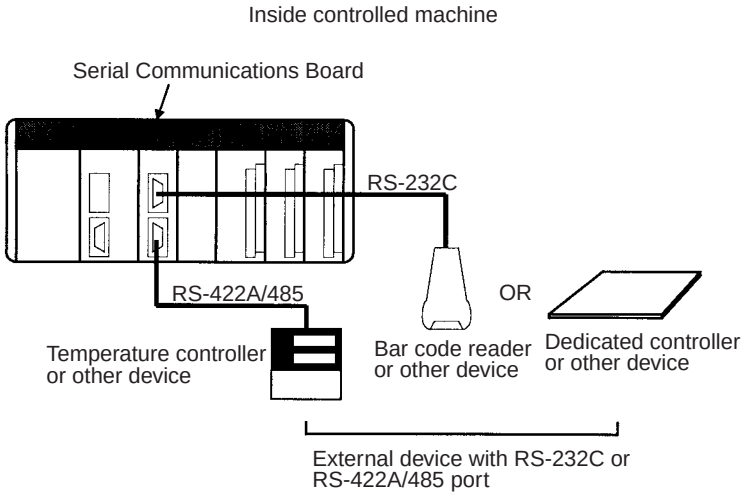

Both RS-232C and RS-422A/485 ports are provided. The RS-422A/485 port enables 1:N connections to general-purpose external devices without going through Converting Link Adapters. The 1:N connections can be used with protocol macros or 1:N-mode NT Links.

1-1-4 System Configuration

The following serial communications modes are supported by the Serial Communications Board: Host Link (SYSMAC WAY), protocol macro, no-protocol, 1:1 Data Links, 1:N-mode NT Link, and 1:1-mode NT Link modes. The devices shown in the following diagram can be connected.

Note The 1:1-mode NT Link and 1:N-mode NT Link communications modes use different protocols that are not compatible with each other.

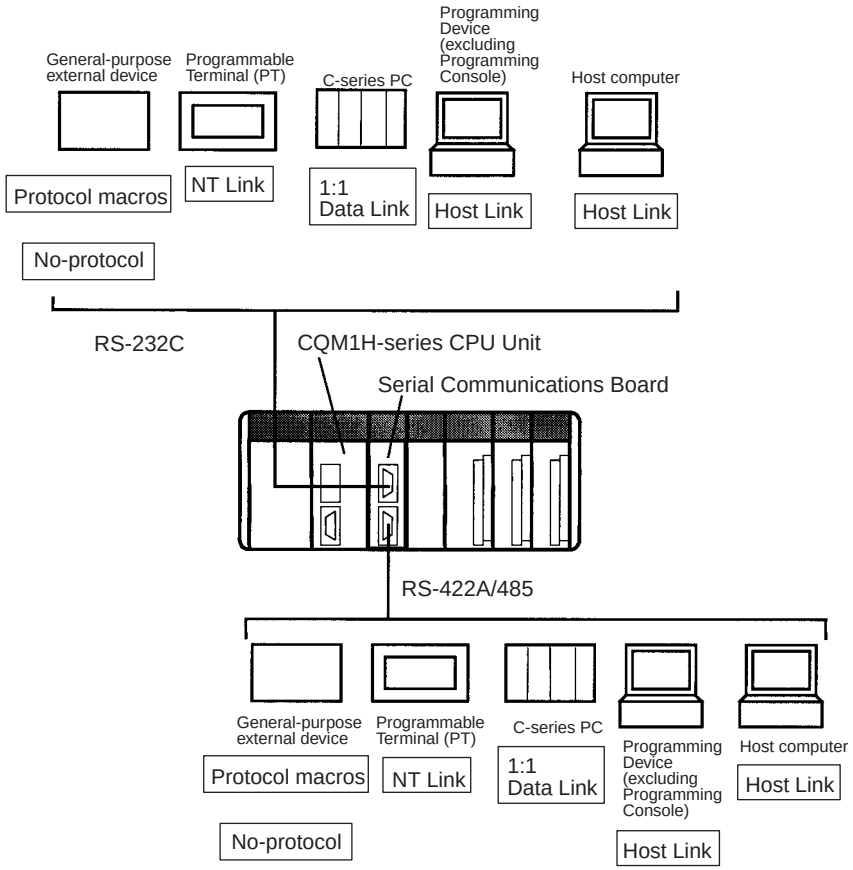

Note An NT-AL001-E Converting Link Adapter can be used to convert between RS-232C and RS-422A/485. This Link Adapter requires a 5-V power supply. Power is provided by the RS-232C port on the Serial Communications Board when the Link Adapter is connected to it, but must be provided separately when connecting the Link Adapter to other devices.

1-1-5 Mounting Location

The Serial Communications Board can be installed in Inner Board slot 1 of a CQM1H-series CPU Unit. The Board cannot be installed in slot 2.

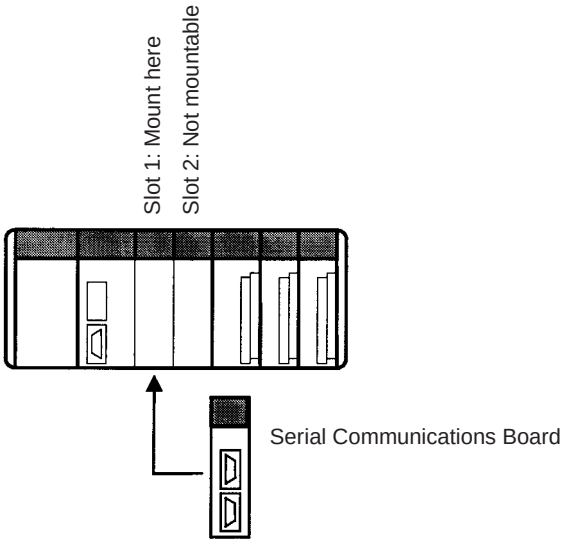

1-2 Protocol Overview

The following six serial communications modes can be used as required for each serial communications port on the Serial Communications Board.

- **Host Link:**
  For connections to host computers, personal computer peripheral devices, or Programmable Terminals
- **Protocol Macros:**
  For communications with general-purpose external devices using protocols
- **No-protocol:**
  For connections to general-purpose devices for no-protocol communications using TXD(—) and RXD(—) instructions
- **1:1 Data Links:**
  For 1:1 data links with a C-series PC, including another CQM1H
- **1:N-mode NT Link:**
  For communications with one or more Programmable Terminals (PTs)
- **1:1-mode NT Link:**
  For communications with one PT

Communications Ports and Serial Communications Modes

Board	Port	Serial communications mode						
		Peripheral bus or Programming Console bus	Host Link (SYSMAC WAY)	Protocol macro	No-protocol	1:1 Data Link	1:N-mode NT Link	1:1-mode NT Link
Serial Communications Boards	RS-232C (port 1)	No	OK	OK	OK	OK	OK (See note 2.)	OK (See note 2.)
	RS-422A/485 (port 2)	No	OK (See note 1.)	OK	OK (See note 1.)	OK (See note 1.)	OK (See note 2.)	OK (See note 2.)

Note
1. A 4-wire connection must be used when using Host Link, no-protocol, or 1:1 Data Link communications with an RS-422A/485 connector.
2. The PT Programming Control functions are not supported.

Connection examples for the serial communications modes are shown in the following sections.

1-2-1 Host Link Mode

In Host Link Mode, C-mode Host Link commands can be sent from a computer, PT, or other host to read or write I/O memory in the PC or to control the PC's operating modes.

The TXD(—) instruction can be used to send ASCII data to the host. This is called slave-initiated communications or unsolicited communications.

Note
1. Programming Devices can also be connected in Host Link mode.
2. A 4-wire connection must be used when using an RS-422A/485 port.

Sending C-mode Host Link Commands

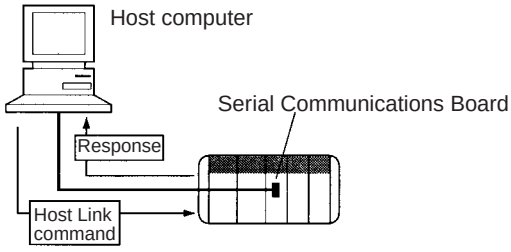

Slave-initiated Communications

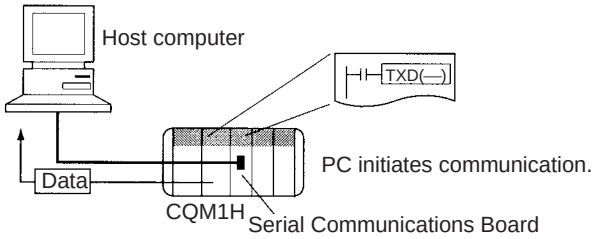

1-2-2 Protocol Macros

Data transfer procedures (called protocols) with general-purpose external devices can be created as macros using the CX-Protocol to match the communications specifications of the external device (but, half-duplex communications and start-stop synchronization must be used).

These protocols are stored in the Serial Communications Boards from the CX-Protocol, and enable data to be exchanged with general-purpose external devices simply by executing the PMCR(—) instruction in the CPU Unit.

Standard system protocols for exchanging data with OMRON devices (such as Temperature Controllers, Intelligent Signal Processors, Bar Code Readers, and Modems) are provided as a standard feature in the Serial Communications Boards and the CX-Protocol. The CX-Protocol can also be used to change the standard system protocols according to user requirements.

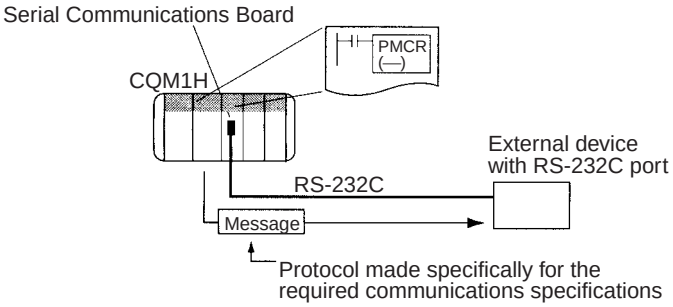

Note There are some restrictions in using the CX-Protocol to manipulate protocols or perform other operations for the CQM1H-series Serial Communications Board. These restrictions are described below.

- Pin 8 on the DIP switch on the front of the CQM1H-series CPU Unit must be turned ON to use the CX-Protocol. While pin 8 is ON, you will not be able to use any of the CPU Unit or Board ports for the CX-Programmer, SYSMAC-CPT, or SYSMAC Support Software.
- The model of PC must be set to the C200HG and the model of CPU Unit must be set to the CPU43.
- Refer to *5-2 Restrictions in Using the CX-Protocol* for further details.

1-2-3 No-protocol Communications

The TXD(—) and RXD(—) instructions can be used in the ladder program to send and receive data without conversion through the RS-232C port to and from an external device.

A start code can be sent before the data and an end code can be sent after it. Alternately, the amount of data being sent can be specified. A communications frame, however, cannot be created according to the specifications of the partner device, providing less flexibility than protocol macros. Retry processing, data form conversions, controlling processing based on a response, and other communications procedures cannot be performed.

No-protocol communications are suitable for communications with bar code readers and other devices that only send data or printers and other devices that only receive data.

Note A 4-wire connection must be used when using an RS-422A/485 port.

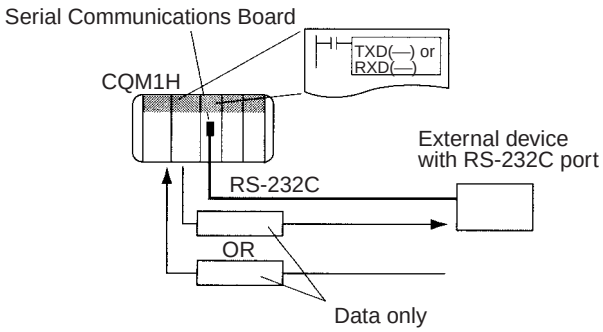

1-2-4 PC 1:1 Data Links

Two PCs can be connected via RS-232C cable to create a data link between them of up to 64 words in the LR area. The link words written by one PC are automatically transferred to the other PC for reading.

One of the following three ranges of words can be set to be linked:
LR 00 to LR 63, LR 00 to LR 31, or LR 00 to LR 15

A 1:1 Data Link communications system can be created between the CQM1H and another CQM1H, or between the CQM1H and the CQM1, C200HX/HG/HE, C200HS, CPM1, CPM1A, CPM2A, CPM2C, or SRM1(-V2).

Note A 4-wire connection must be used when using an RS-422A/485 port.

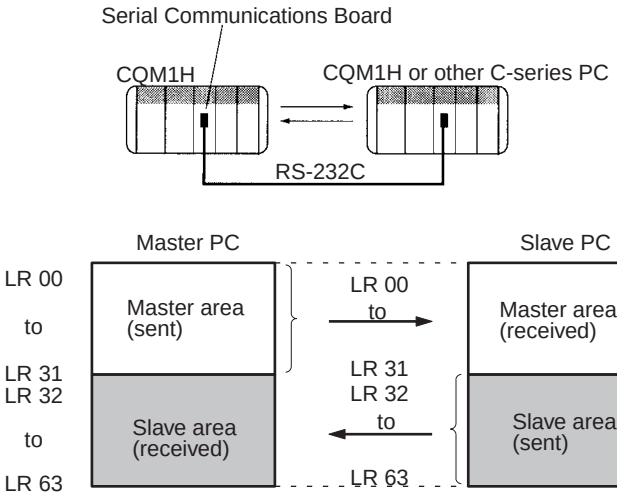

1-2-5 NT Links — 1:N Mode

A PC can be connected to one or more Programmable Terminals (PTs) using an RS-232C or RS-422A/485 port. The I/O memory of the PC is allocated to the Status Control Areas and the Status Notification Areas used by the PTs, as well as to display objects, such as touch switches, lamps, and memory tables. This enables the status of the I/O memory in the PC to be controlled and monitored by operations from the PTs, without the use of a ladder diagram programming in the PC. Up to eight PTs can be connected to a PC.

Note The user does not need to be aware of NT Link commands. The user only has to allocate the PC memory to the PTs.

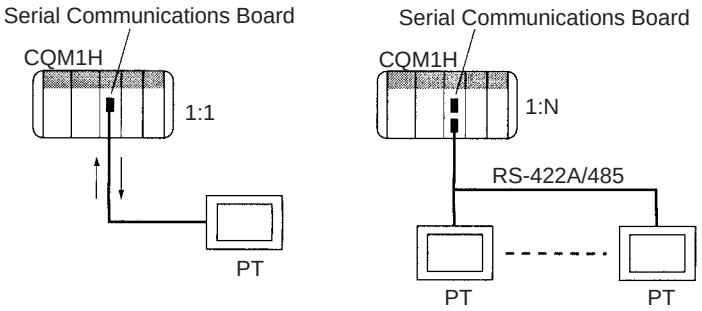

1-2-6 NT Links — 1:1 Mode

The functionality of the 1:1 mode is the same as that of the 1:N mode, but only a 1:1 connection is possible. The 1:1 and 1:N modes are not compatible as protocols.

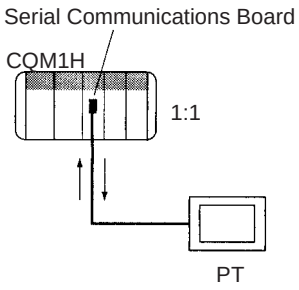

1-3 Specifications

1-3-1 Serial Communications Board

Device name		Serial Communications Board
Model number		CQM1H-SCB41
Classification		CQM1H-series Inner Board
Supporting CPU Units		CQM1H-CPU51/61
Number of mountable Boards/PC and mounting location		One Board per PC maximum, must be in Inner Board slot 1
Serial communications ports	**Port 1**	RS-232C
	Port 2	RS-422A/485
Protocols	**Port 1**	Host Link, protocol macro, no-protocol, 1:1 Data Link, 1:N-mode NT Link or 1:1-mode NT Link can be selected for each port.
	Port 2	
Software interface with CPU Unit		IR 200 to IR 207 (words for Inner Board slot 1)
PC Setup settings		DM 6550 to DM 6559 (in read-only DM area in CPU Unit) Set from Programming Device
Current consumption (See note.)		200 mA max. at 5 V DC
Dimensions		25 × 110 × 107 (mm) (W × H × D)
Weight		90 g max.
Standard accessories		Socket: XM2SA-0901 (OMRON) (two included) Hood: XM2SA-0911-E (OMRON) (two included, ESD compatible)

Note The current consumption is for one Serial Communications Board. Power is supplied from the CQM1H

When an NT-AL001-E Link Adapter is connected to the Serial Communications Board, power is supplied to the Link Adapter from the Board. A current consumption of 150 mA must be added for each Link Adapter that is connected. In the above specifications, “x” indicates that 150 mA must be added for each port to which an NT-AL001-E Link Adapter is connected to provide the required 5-V power supply.

1-3-2 General Specifications

Conform to SYSMAC CQM1H-series CPU Unit specifications.

1-4 Basic Operating Procedure

An overview of the basic operating procedure is provided here. Details are provided in sections 4 to 8 of this manual according to the serial communications mode.

1,2,3...

1. Turn OFF the power supply to the PC.
2. Mount the Board.
3. Connect the Board and the external device(s).
4. Turn ON the power supply to the PC.
5. Set the PC Setup settings from a Programming Device (e.g., Programming Console or CX-Protocol).
6. Execute communications.

   Use the control bits, flags, and words allocated in the IR area in the ladder program to control communications.

SECTION 2
Board Components and Installation

This section describes the components of the Serial Communications Board, how to connect it in the CPU Unit, and how to connect it to external devices.

2-1 Component Names and Functions 10
2-1-1 Indicators 10
2-1-2 RS-232C Port 11
2-1-3 RS-422A/485 Port 12
2-1-4 Switches 13
2-2 Installation 14
2-2-1 Mounting the Board 14
2-2-2 External Dimensions 15
2-2-3 Mounting Height and Connector Cover Dimensions 15
2-2-4 Precautions in Handling the Board 16
2-3 Wiring 17
2-3-1 Connectors 17
2-3-2 Wiring Precautions 18
2-3-3 Reducing Electrical Noise for External Wiring 18
2-3-4 Port Applicability and Restrictions for 2-Wire/4-Wire Connections 19
2-3-5 Recommended RS-232C Wiring Examples 20
2-3-6 Recommended RS-422A/485 Wiring Examples 21
2-3-7 Wiring Connectors 23
2-3-8 Soldering 25
2-3-9 Assembling Connector Hood 26
2-3-10 Connecting to the Board 26

2-1 Component Names and Functions

The components of the Serial Communications Board are described in this section.

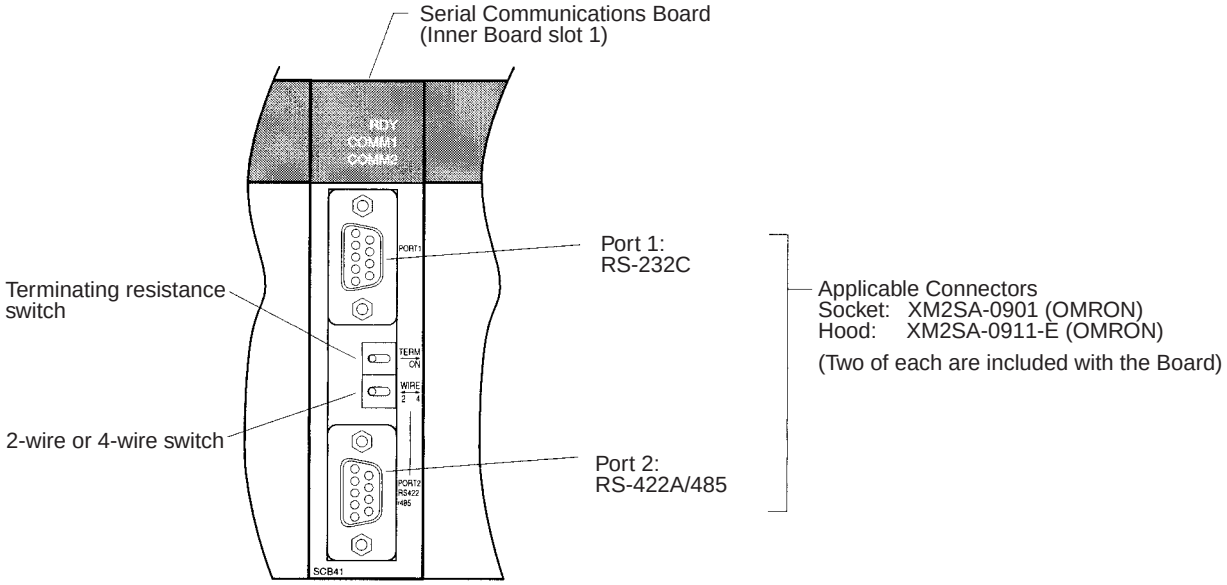

2-1-1 Indicators

Board Indicators

There are three LED indicators on the Board, as described below.

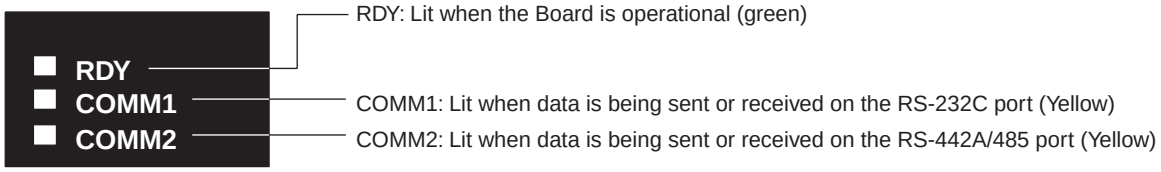

Indicator	Color	Status	Meaning
RDY	Green	Lit	Operating normally, and protocol macro preparations have been completed.
		Flashing	There is an error in the PC Setup settings for the Board or in the protocol macros contained in the Board.
		Not lit	A hardware error has occurred in the Board.
COMM1	Yellow	Flashing	Port 1 is being used for sending or receiving.
		Not lit	Port 1 is not being used for sending or receiving.
COMM2	Yellow	Flashing	Port 2 is being used for sending or receiving.
		Not lit	Port 2 is not being used for sending or receiving.

CPU Unit Indicators

A Serial Communications Board is mounted as an Inner Board in the CPU Unit and thus affects the CPU Unit ERR/ALM indicator.

Indicator	Color	Status	Meaning	
ERR/ALM	Red	Lit	Fatal error	If a fatal error occurs, the CPU Unit will stop operation in either RUN or MONITOR mode.
		Flashing	Non-fatal error	If a non-fatal error occurs, the CPU Unit will continue operation in either RUN or MONITOR mode.
		Not lit	Normal operation	The CPU Unit is operating normally. This indicator will also not be lit when a watchdog timer error occurs.

If an error in the Inner Board is the cause of the error indicated on the ERR/ALM indicator, the Inner Board Error Flag (SR 25415) will turn ON and information on the error will be stored in AR 0400 to AR 0407. Refer to *SECTION 9 Troubleshooting and Maintenance* for details.

2-1-2 RS-232C Port

Protocol	Host Link	No-protocol	Protocol macros	1:1 Data Links	1:N NT Links	1:1 NT Links
Communications method	Half-duplex					
Synchronization	Start-stop synchronization (asynchronous)					
Baud rate	1,200/2,400/4,800/9,600/ 19,200 bps			19,200 bps	38,400 bps	19,200 bps
Connections	1:1 (1:N possible using Converting Link Adapters)			1:1	1:1 (1:N possible using Link Adapters)	1:1
Transmission distance	15 m max. (See note.)					
Interface	Complies with EIA RS-232C					

Note The maximum cable length for RS-232C is 15 m. The RS-232C standard, however, does not cover baud rates above 19.2 Kbps. Refer to the manual for the device being connected to confirm support.

Connector Pin Layout

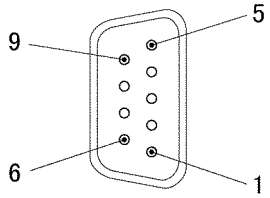

Pin No.	Abbreviation	Signal name	I/O
1 (See note 1.)	FG	Shield	---
2	SD	Send data	Output
3	RD	Receive data	Input
4	RTS (RS)	Request to send	Output
5	CTS (CS)	Clear to send	Input
6 (See note 2.)	5V	Power supply	---
7	DSR (DR)	Data set ready	Input
8	DTR (ER)	Data terminal ready (See note 4.)	Output
9	SG	Signal ground	---
Shell (See note 1.)	FG	Shield	---

Note

1. Pin No. 1 and the shell are connected to the ground terminal (GR) of the Power Supply Unit inside the Serial Communications Board. Therefore, the cable shield can be grounded by grounding GR of the Power Supply Unit.
2. Pin 6 (5 V) is required when the NT-AL001-E Link Adapter is connected. For details on connection methods, refer to *2-3 Wiring*.

⚠ **Caution** Do not connect the 5-V power supply of pin 6 to any external device other than an NT-AL001-E Link Adapter. Otherwise, the external device and the Serial Communications Board may be damaged.

The following cables are provided for connection to NT-AL001-E Link Adapters. We recommend that these cables be used.
NT-AL001-E connecting cables: XW2Z-070T-1 (0.7 m)
XW2Z-200T-1 (2 m)

Applicable Connectors

Socket: XM2A-0901 (OMRON) or equivalent
Hood: XM2S-0911-E (OMRON, conforms to ESD) or equivalent
One Socket and one Hood are provided for each port.

Recommended Cables

UL2464 AWG28×5P IFS-RVV-SB (UL-approved, Fujikura Ltd.)
AWG28×5P IFVV-SB (not UL-approved, Fujikura Ltd.)
UL2464-SB (MA) 5P×28AWG (7/0.127) (UL-approved, Hitachi Cable, Ltd.)
CO-MA-VV-SB 5P×28AWG (7/0.127) (not UL-approved, Hitachi Cable, Ltd.)
Cable length: 15 m max.

2-1-3 RS-422A/485 Port

Protocol	Host Link	No-protocol	Protocol macros	1:1 Data Links	1:N NT Links	1:1 NT Links
Communications method	Half-duplex					
4-wire, 1:1	OK	OK	OK	OK	OK	OK
4-wire, 1:N	OK	OK	OK	No	OK	No
2-wire, 1:1	No	No	OK	No	OK	No
2-wire, 1:N	No	No	OK	No	OK	No
Synchronization	Start-stop synchronous (asynchronous)					
Baud rate	1,200/2,400/4,800/9,600/ 19,200 bps			19,200 bps	38,400 bps	19,200 bps
Connections	1:N (N: 32 Units max.)			1:1	1:N (N: 8 Units max.)	1:1
Transmission distance	500 m max. (The total combined cable length is 500 m max. T-branch lines must be a maximum of 10 m long.)					
Interface	Complies with EIA RS-485					

Connector Pin Layout

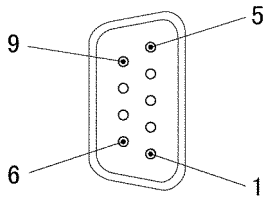

Pin No.	Abbreviation	Signal name	I/O
1 (See note 1.)	SDA	Send data –	Output
2 (See note 1.)	SDB	Send data +	Output
3	NC	Not used	---
4	NC	Not used	---
5	NC	Not used	---
6 (See note 1.)	RDA	Receive data –	Input
7	NC	Not used	---
8 (See note 1.)	RDB	Receive data +	Input
9	NC	Not used	---
Shell (See note 2.)	FG	Shield	---

Note

1. When 2-wire connections are used, use pins 1 and 2, or pins 6 and 8.
2. The shell is connected to the ground terminal (GR) of the Power Supply Unit inside of the Serial Communications Board. Therefore, the cable shield can be grounded by grounding the GR of the Power Supply Unit.

Internal Circuits

The internal circuits for port 2 are shown below.

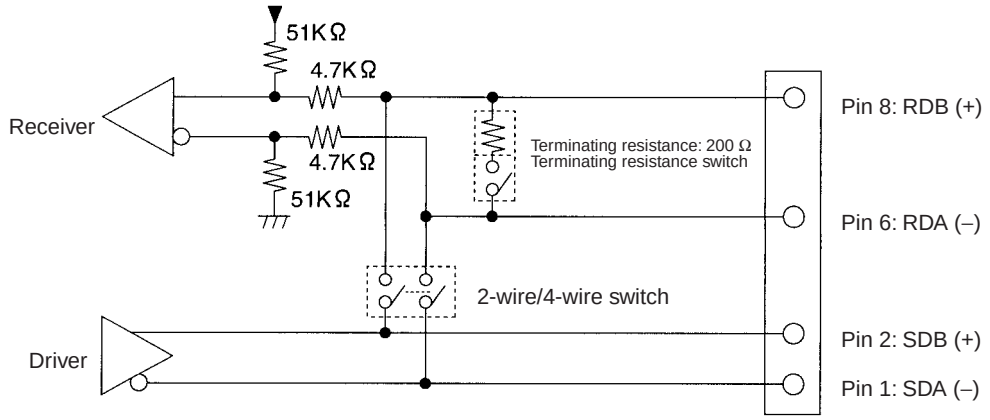

⚠ **Caution** Confirm polarities before connecting RS-422A/485 cables. Some devices require that SDA/B and RDA/B or signal polarities be reversed.

Applicable Connectors

Socket: XM2A-0901 (OMRON) or equivalent
Hood: XM2S-0911-E (OMRON, conforms to ESD) or equivalent
One Socket and one Hood are provided for each port.

Recommended Cables

CO-HC-ESV-3P×7/0.2 (Hirakawa Hewtech Corp.)
Cable length: 500 m max.
(The total combined cable length is 500 m max. T-branch lines must be a maximum of 10 m long.)

2-1-4 Switches

The TERM and WIRE switches are on the front panel of the Serial Communications Board. Refer to page page 10 for a diagram of the Board.

Terminating Resistance Switch

When an RS-422/485 port is used, turn ON the switch if the Serial Communications Board is on the end of the transmission line. Refer to information on specific serial communications modes for the ON/OFF settings.

Label	Name	Settings	Factory setting
TERM	Terminating resistance switch	OFF: Terminating resistance OFF ON: Terminating resistance ON	OFF: Terminating resistance OFF

2-Wire or 4-Wire Switch

When an RS-422/485 port is used, set the switch to 2 when 2-wire connections are used, and set the switch to 4 when 4-wire connections are used.

Label	Name	Settings	Factory setting
WIRE	2-wire or 4-wire switch	2: 2-wire 4: 4-wire	2: 2-wire

Note Host Link, no-protocol, and 1:1 Data Link modes cannot use 2-wire RS-422A/485 communications. Always use 4-wire connections when using RS-422A/485 communications for these serial communications modes. Refer to *2-3 Wiring* for connections.

2-2 Installation

2-2-1 Mounting the Board

This section describes how to mount a Serial Communications Board in Inner Board slot 1 of a CPU Unit. Slot 1 is the slot on the left. Only one Serial Communications Board can be installed in each CPU Unit.

Note

1. The Serial Communications Board cannot be mounted in Inner Board slot 2.
2. Always turn OFF the power before installing or removing the Serial Communications Board. Installing or removing the Serial Communications Board with the power ON can cause the CPU Unit to malfunction, damage internal components, or cause communications errors.
3. Before handling the Serial Communications Board, touch a grounded metallic object in order to discharge any static build-up from your body.

1,2,3...

1. Press the catches at the top and bottom of the Inner Board slot 1 compartment cover.

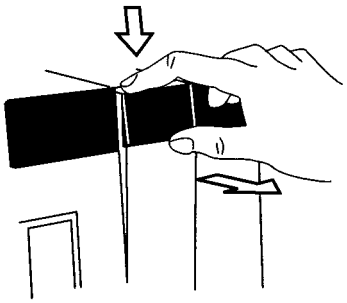

Press the top catch.

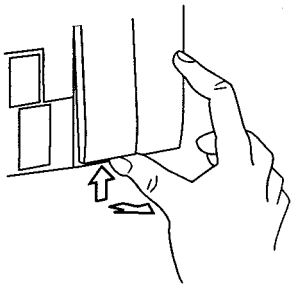

Press the bottom catch.

2. Remove the compartment cover.

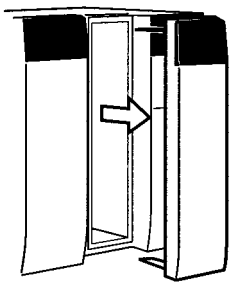

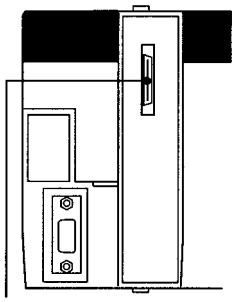

Inner Board Connector

3. Insert the Serial Communications Board.

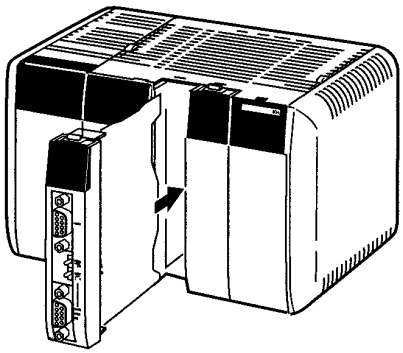

2-2-2 External Dimensions

Unit: mm

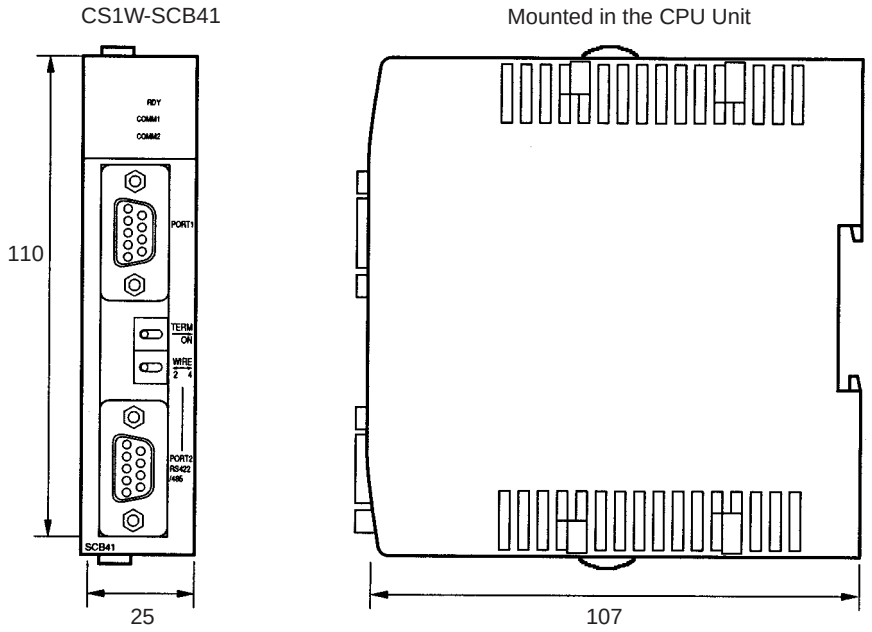

2-2-3 Mounting Height and Connector Cover Dimensions

When mounting the Serial Communications Board, make sure to provide space for the mounting height and connector cover dimensions shown below.

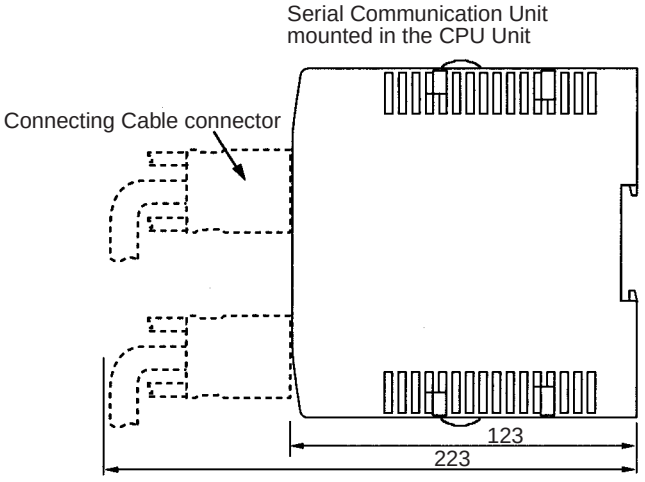

Note The mounting heights shown above are applicable when the attached connectors, connector covers, and recommended cables are used. The mounting height may differ when other connectors, connector covers, and cables are used. Determine the mounting height, taking into account the connectors, connector covers, and the minimum bending radius of the cables.

2-2-4 Precautions in Handling the Board

- Turn OFF the power supply to the CPU Unit before mounting or removing the Board.
- Turn OFF the power supply to the CPU Unit before connecting or disconnecting Board connectors or wiring.
- Separate the port connector lines from the high-tension or power lines to reduce external noise.
- Leave the port cover attached when not using a communications port.

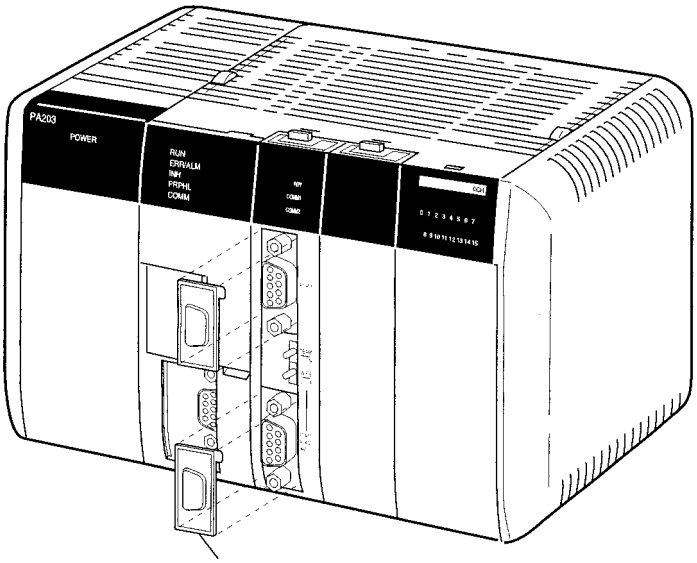

2-3 Wiring

2-3-1 Connectors

Prepare connecting cables for port 1 (RS-232C) and port 2 (RS422A/485) using the Sockets and Hoods provided with the Board and the recommended cables.

Connection methods vary with the serial communications mode that is being used. Refer to the following sections for connection examples.

Host Link:	*SECTION 4 Host Link Communications*
Protocol macros:	*SECTION 5 Protocol Macros*
No-protocol:	*SECTION 6 No-protocol Communications*
1:1 Data Links:	*SECTION 7 Communications for 1:1 Data Links*
NT Links:	*SECTION 8 NT Link Communications*

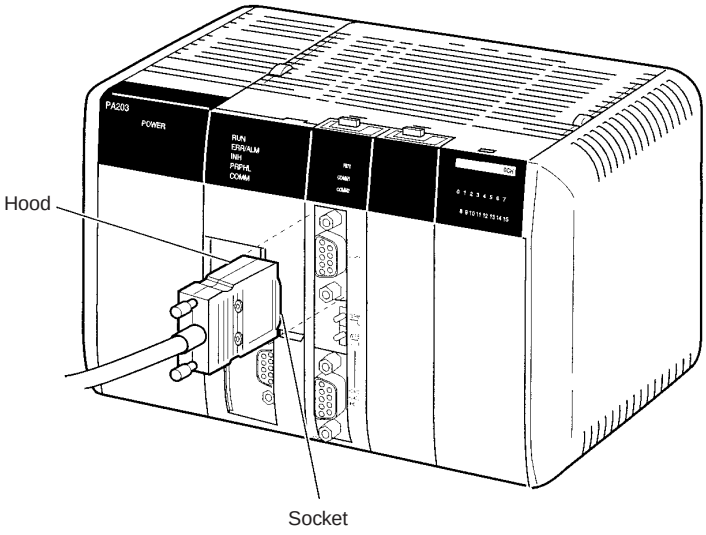

Standard Connectors (for Both RS-232C and RS-422A/485)

Name	Model	Specifications	
Socket	XM2A-0901	9-pin male	Used together (provided with Serial Communications Board).
Hood	XM2S-0911-E	For 9-pin, metric screws, conforms to ESD	

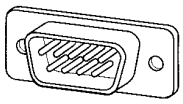

Socket:
XM2A-0901

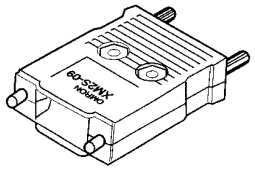

Hood:
XM2S-0911-E

Recommended Cables

RS-232C Cables

Model	Manufacturer
UL2464 AWG28×5P IFS-RVV-SB (UL-approved) AWG28×5P IFVV-SB (not UL-approved)	Fujikura Ltd.
UL2464-SB (MA) 5P×AWG28 (7/0.127) (UL-approved) CO-MA-VV-SB 5P×AWG28 (7/0.127) (not UL-approved)	Hitachi Cable, Ltd.

RS422A/485 Cable

Model	Manufacturer
CO-HC-ESV-3P×7/0.2	Hirakawa Hewtech Corp.

Refer to pages 11 and 12 for the connector pin layouts. Refer to *2-3-5 Recommended RS-232C Wiring Examples* and *2-3-6 Recommended RS-422A/485 Wiring Examples* for wiring examples, and to *2-3-7 Wiring Connectors* for wiring methods.

Standard cables are available for connection to personal computers and PTs. Refer to *SECTION 4 Host Link Communications* for personal computer cables and to your PT user's manual for PT cables.

2-3-2 Wiring Precautions

- Before connecting or disconnecting the communications cables, always make sure that the PC is turned OFF.
- Tighten the communications connector screws firmly with your fingers.
- Serial Communications Boards can be connected to various devices. For compatibility, refer to the operation manuals for the devices to which they are to be connected.

2-3-3 Reducing Electrical Noise for External Wiring

Observe the following precautions for external wiring.

- When multi-conductor signal cable is being used, avoid using I/O wires and other control wires in the same cable.
- If wiring racks are running in parallel, allow at least 300 mm between the racks.

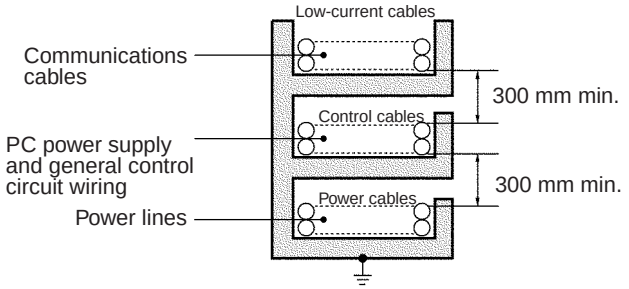

Ground to 100 Ω or less.

- If the I/O wiring and power cables must be placed in the same duct, they must be shielded from each other using grounded steel sheet metal.

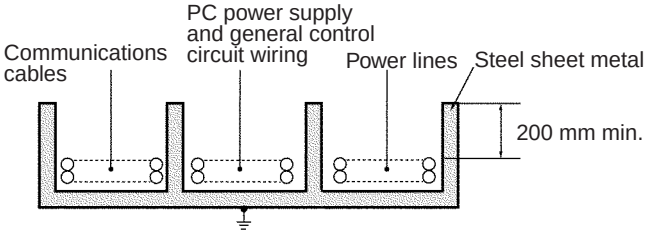

Ground to 100 Ω or less.

2-3-4 Port Applicability and Restrictions for 2-Wire/4-Wire Connections

The following table shows the port connections that can be used for each serial communications mode.

Serial communications mode	RS-232C port		RS-422A/485 port			
	1:1	1:N	4-wire		2-wire	
			1:1	1:N	1:1	1:N
Host Link	OK	OK (See note 2.)	OK	OK	No	No
Protocol macros	OK		OK	OK	OK	OK
No-protocol	OK		OK	OK	No	No
1:1 Data Links	OK	No	OK	No	No	No
1:N-mode NT Links	OK		OK	OK	OK	OK
1:1-mode NT Links	OK	No	OK	No	No	No

Note

1. The 1:N connection method can be used by converting between RS-232C and RS-422A/485 through NT-AL001-E Converting Link Adapters.
2. Use 4-wire connections between the Converting Link Adapters.
3. The 2-wire RS-422A/485 connections cannot be used for Host Link communications. Use 4-wire connections.

The transmission circuits for 2-wire and 4-wire connections are different, as shown in the following diagram.

Example of 4-Wire Connections

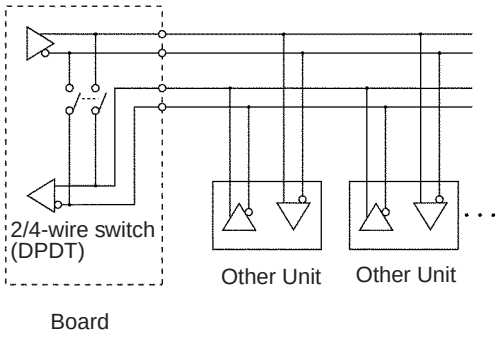

Example of 2-Wire Connections

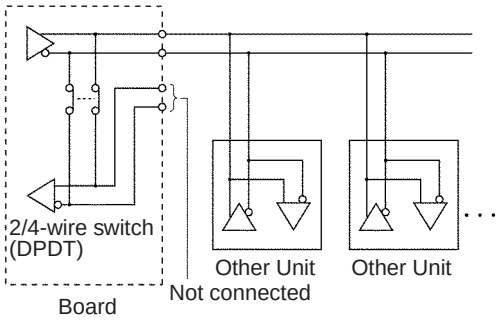

Note

1. Use the same transmission circuit (2-wire or 4-wire) for all nodes.
2. Do not use 4-wire connections when the 2/4-wire switch on the Board is set to 2-wire.

NT-AL001-E Link Adapter Settings

The NT-AL001-E Link Adapter has a DIP switch for setting RS-422A/485 communications conditions. When connecting the Board, refer to the DIP switch settings shown in the following table.

Pin	Function	Factory setting
1	Not used. Always set this pin to ON.	ON
2	Built-in terminating resistance setting ON: Connects terminating resistance. OFF: Disconnects terminating resistance.	ON
3	2/4-wire setting	OFF
4	2-wire: Set both pins to ON. 4-wire: Set both pins to OFF.	OFF
5	Transmission mode (See note.) Constant transmission: Set both pins to OFF. Transmission performed when CTS signal in RS-232C interface is at high level: Set pin 5 to OFF and pin 6 to ON. Transmission performed when CTS signal in RS-232C interface is at low level: Set pin 5 to ON and pin 6 to OFF.	ON
6		OFF

Note When connecting to a CQM1H-series CPU Unit, turn OFF pin 5 and turn ON pin 6.

2-3-5 Recommended RS-232C Wiring Examples

It is recommended that RS-232C cables be connected as described below, especially when the Serial Communications Board is used in an environment where it is likely to be subject to electrical noise.

1,2,3... 1. Always use shielded twisted-pair cables as communications cables.

Model	Manufacturer
UL2464 AWG28x5P IFS-RVV-SB (UL-approved) AWG28x5P IFVV-SB (not UL-approved)	Fujikura Ltd.
UL2464-SB (MA) 5Px28AWG (7/0.127) (UL-approved) CO-MA-VV-SB 5Px28AWG (7/0.127) (not UL-approved)	Hitachi Cable, Ltd.

2. Combine signal wires and SG (signal ground) wires in a twisted-pair cable. At the same time, bundle the SG wires to the connectors on the Serial Communications Board and the remote device.
3. Connect the shield of the communications cable to the Hood (FG) terminal of the RS-232C connector on the Serial Communications Board. At the same time, ground the ground (GR) terminal of the Power Supply Unit to 100 Ω or less.
4. A connection example is shown below.

   Example: Twisted-pair Cable Connecting SD-SG, RD-SG, RTS-SG, and CTS-SG Terminals

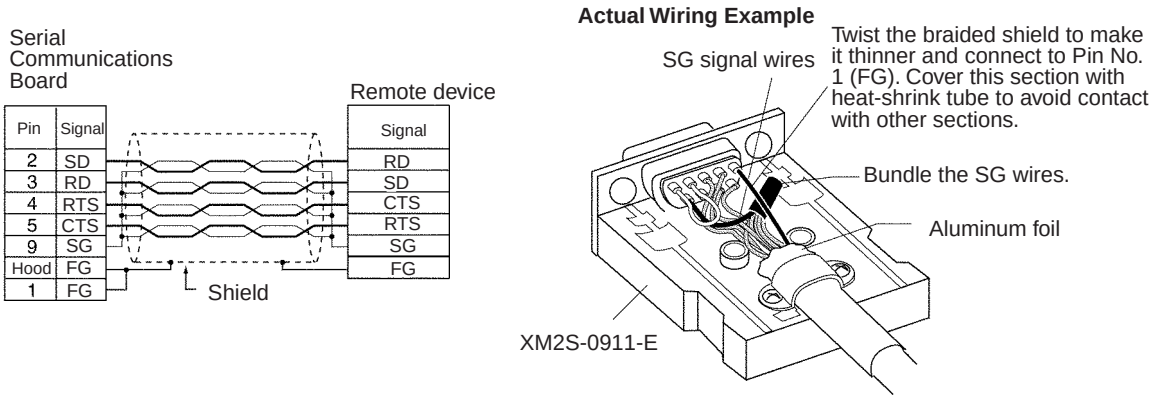

Note The Hood (FG) is internally connected to the ground terminal (GR) on the Power Supply Unit. Therefore, FG is grounded by grounding the ground terminal (GR) on the Power Supply Unit. Although there is conductivity between the Hood (FG) and pin 1 (FG), connect the Hood (FG) to the shield because the Hood (FG) has smaller contact resistance with the shield than pin 1 (FG), and thus provides better noise resistance.

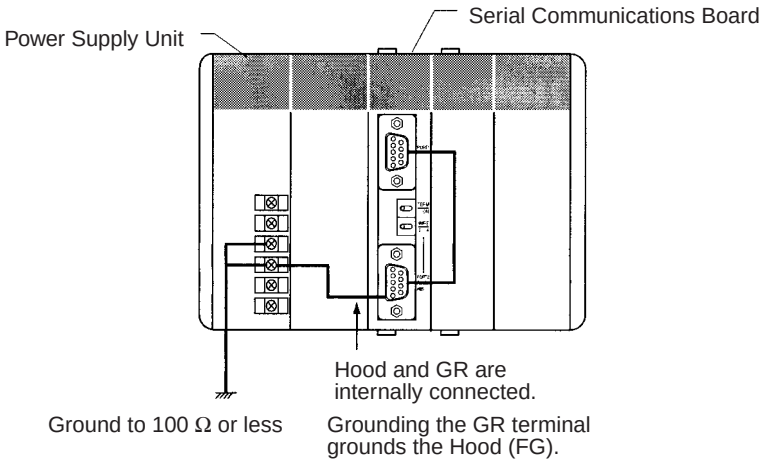

2-3-6 Recommended RS-422A/485 Wiring Examples

Recommended RS-422A/485 Cable

We recommend the following wiring methods to ensure quality transmissions for RS-422A/485 communications.

1,2,3... 1. Always use shielded twisted-pair cables for the communications cables.

Model	Manufacturer
CO-HC-ESV-3Px7/0.2	Hirakawa Hewtech Corp.

2. Connect the shield of the communications cable to the Hood (FG) of the RS-422A/485 connector on the Serial Communications Board. At the same time, ground the ground (GR) terminal of the Power Supply Unit to 100 Ω or less.

Note Always ground the shield only at the Board end. Grounding both ends of the shield may damage the device due to the potential difference between the ground terminals.

Connection examples are shown below.

2-Wire Connections

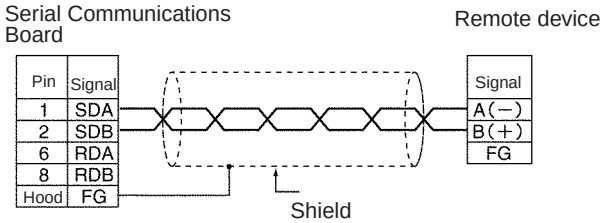

4-Wire Connections

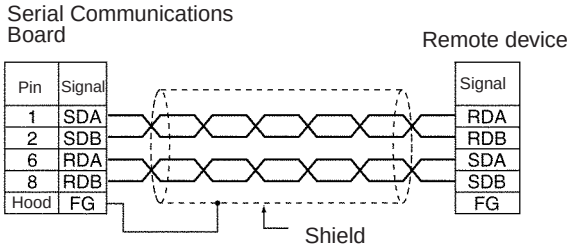

Using a 3G2A9-AL001 Link Adapter

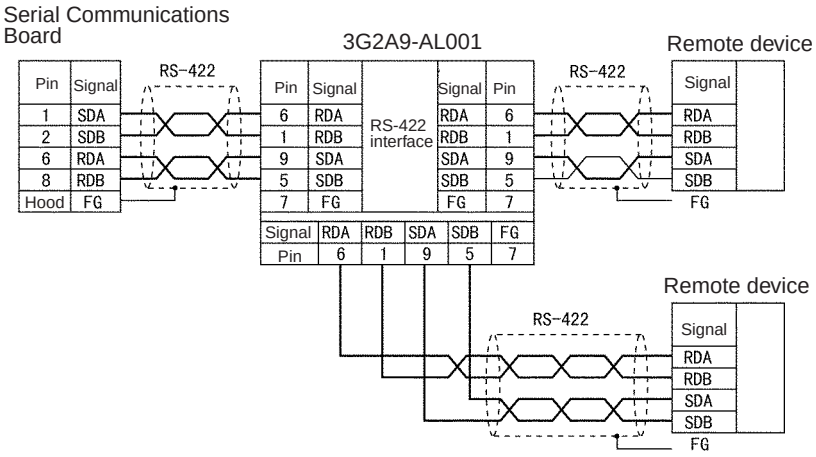

Using an NT-AL001-E RS-232C/RS-422 Link Adapter

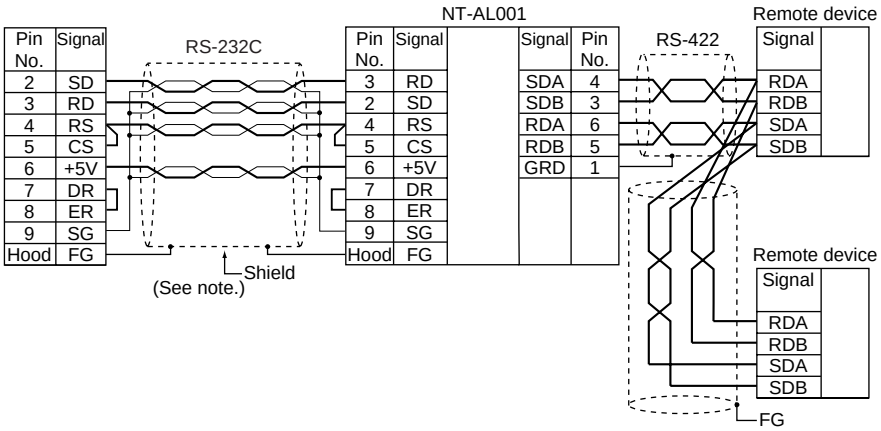

Note The following cables are available for this connection.

Length	Model
70 cm	XW2Z-070T-1
2 m	XW2Z-200T-1

It is recommended that one of these cables be used to connect the RS-232C port on the Serial Communications Board to the NT-AL001-E Converting Link Adapter.

• Recommended cable (XW2Z-070T-1S/XW2Z-200T-1) wiring

XW2Z-□□OT-1 (10-conductor cable) wiring

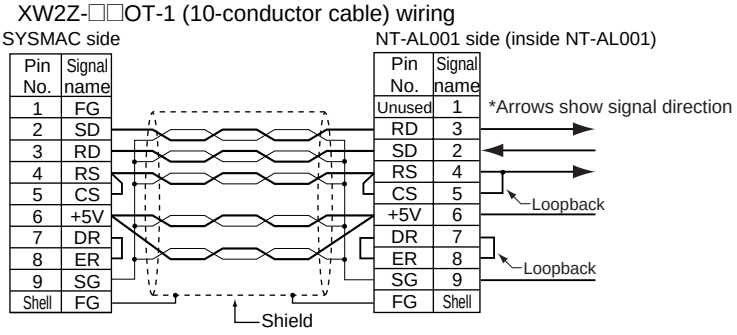

Note

1. The DS/RS signals are specially wired in the XW2Z-□□OT-1 connecting cable for use with the NT-AL001-E Converting Link Adapter. Do not use this cable for any other purpose. Use with any other equipment may result in malfunction.
2. The Hood (FG) is internally connected to the ground terminal (GR) on the Power Supply Unit. Therefore, FG is grounded by grounding the ground terminal (GR) on the Power Supply Unit.

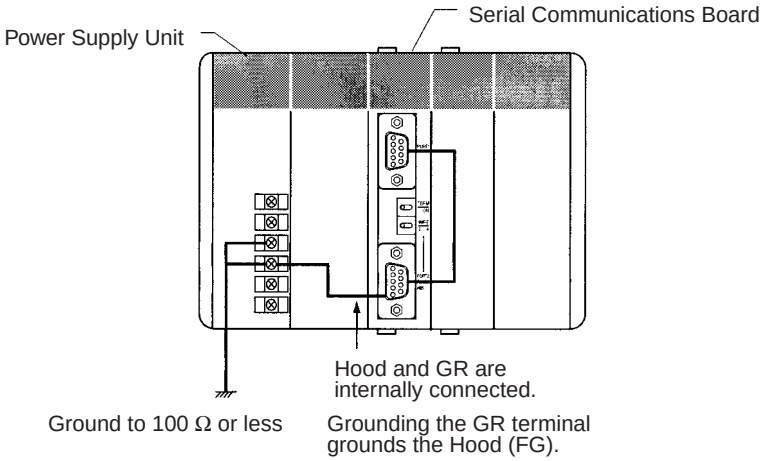

3. Be sure to turn ON the terminating resistance at the last Unit at the end of the RS-422A/485 cable.

2-3-7 Wiring Connectors

Use the following steps to wire connectors.

Cable Preparation

See the following diagrams for the length of the cable portion to be cut in each step.

Shield Connected to Hood (FG)

1,2,3...

1. Cut the cable to the required length.

2. Remove the specified length of the sheath from the cable using a knife. Be careful not to scratch the braided shield.

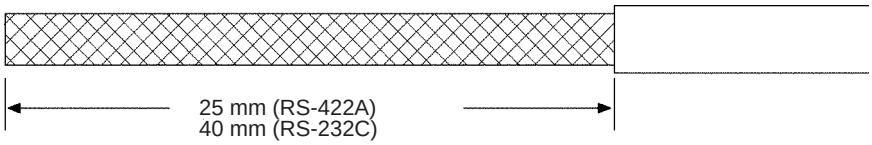

3. Trim off the braided shield using scissors so that the remaining shield length is 10 mm.

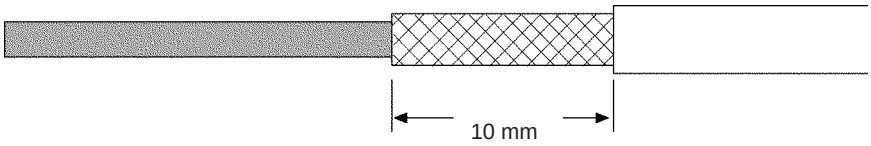

4. Remove the insulation from each conductor using a stripper so that the exposed conductor length is 5 mm.

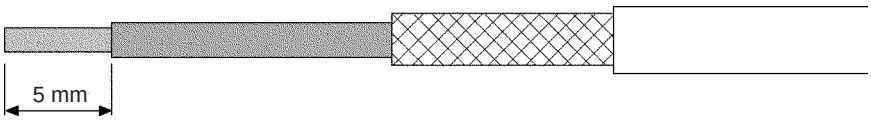

5. Fold back the braided shield.



6. Wrap aluminum foil tape around the folded shield.



Shield Not Connected to Hood (FG)

1,2,3...

1. Cut the cable to the required length.



2. Remove the specified length of the sheath from the cable using a knife. Be careful not to scratch the braided shield.

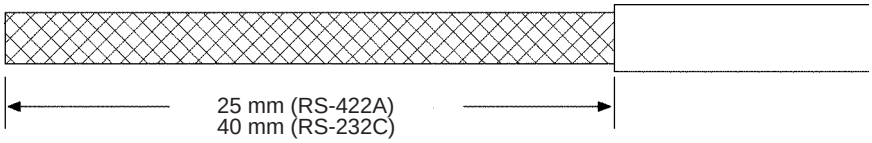

3. Trim off all the braided shield using scissors.



4. Remove the insulation from each conductor using a stripper so that the exposed conductor length is 5 mm.

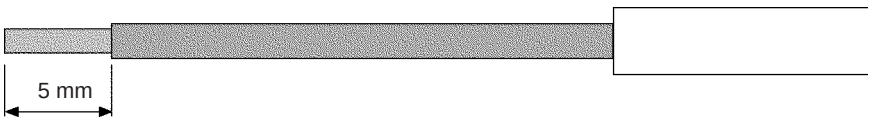

5. Wrap adhesive tape around the conductor from which the braided shield was removed.

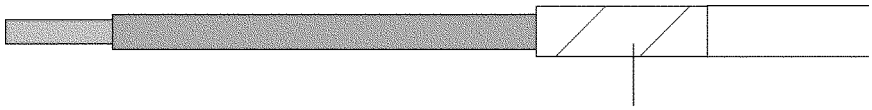

Adhesive tape

2-3-8 Soldering

1,2,3...

1. Thread a heat-shrinking tube through each conductor.
2. Temporarily solder each conductor to the corresponding connector terminals.
3. Completely solder each conductor.

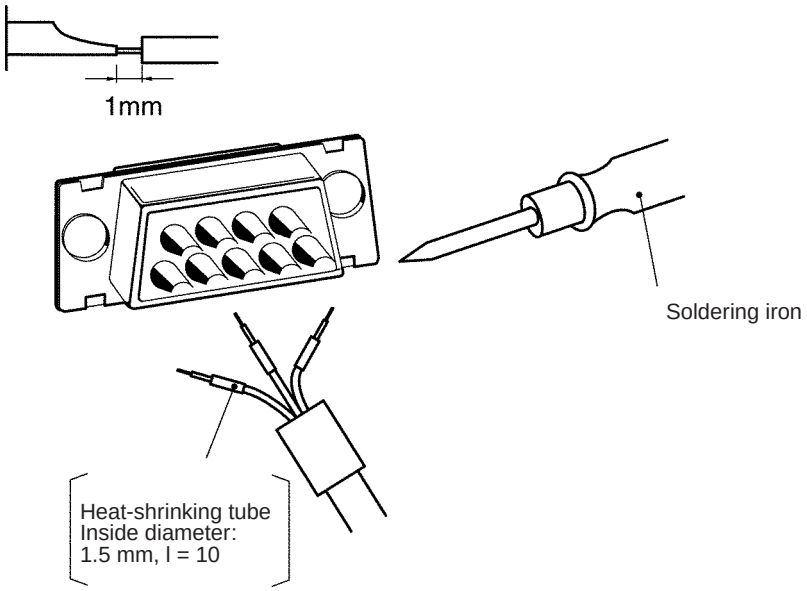

4. Return the heat-shrinking tube to the soldered portion, then heat the tube to shrink it in place.

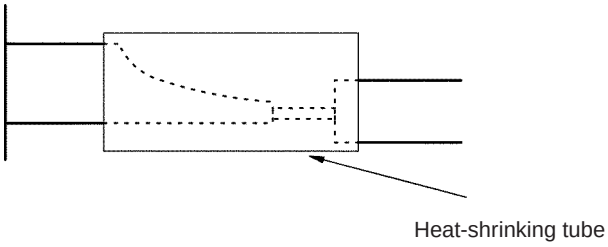

Heat-shrinking tube

2-3-9 Assembling Connector Hood

Assemble the connector Hood as shown below.

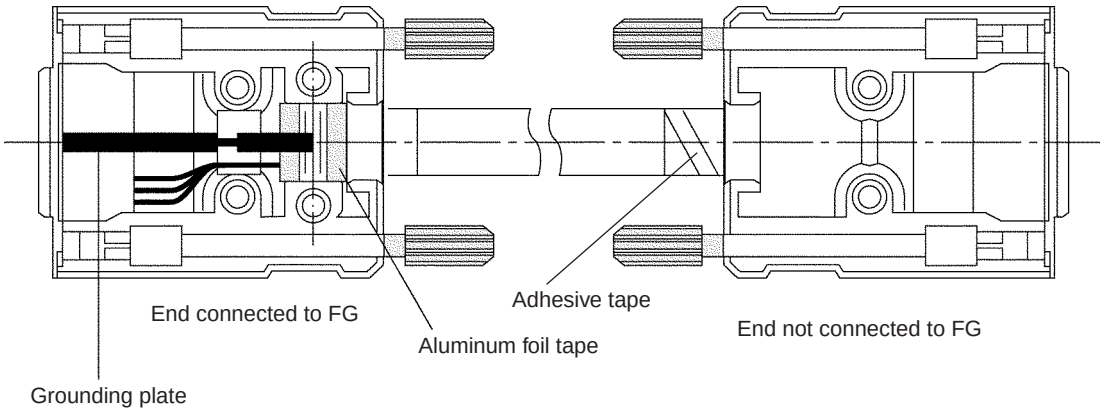

2-3-10 Connecting to the Board

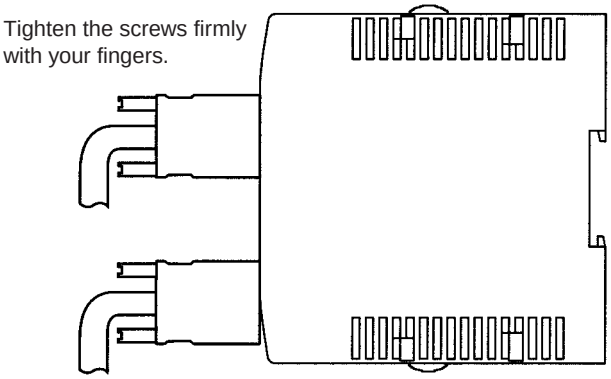

SECTION 3
Default Settings and Related Bits/Flags

This section describes the settings, control bits, flags, and status information available in the CPU Unit for use with the Serial Communications Board.

3-1 Overview 28
3-2 PC Setup Settings 28
3-3 Control Bits, Flags, and Status Information 30

3-1 Overview

The following settings, control bits, flags, and information are available in the CPU Unit memory for use with the Serial Communications Board.

Contents	Addresses
PC Setup settings for the Serial Communications Board	Port 1: DM 6555 to DM 6559 Port 2: DM 6550 to DM 6554
Control bits, flags, and status information for the Inner Board slot 1	IR 200 to IR 207
Error flags and information for Inner Boards	SR 25415: Inner Board Error Flag AR 04: Inner Board Error Code

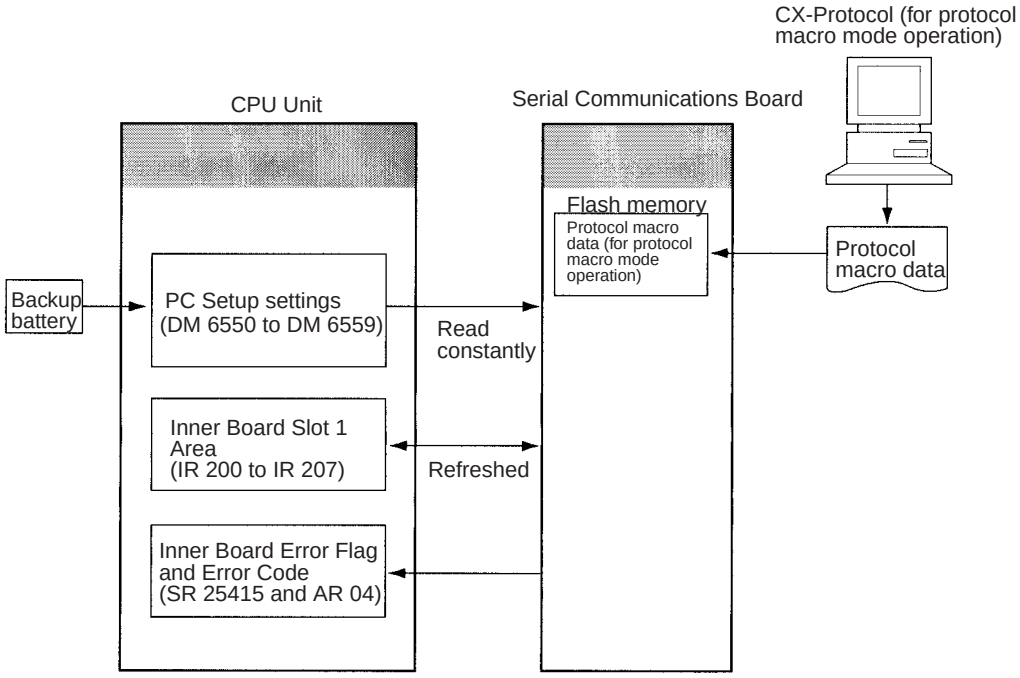

3-2 PC Setup Settings

Settings for the Serial Communications Board can be made from a Programming Device in the following words of the PC Setup.

Port 1: DM 6555 to DM 6559
Port 2: DM 6550 to DM 6554

The settings stored in these words are read constantly; the PC does not need to be restarted or reset when changes are made to the settings. They will be updated automatically as soon as they are changed.

The settings in these words depend on the serial communications mode that is being used. Refer to the following sections for details.

Host Link: *SECTION 4 Host Link Communications*
Protocol macros: *SECTION 5 Protocol Macros*
No-protocol: *SECTION 6 No-protocol Communications*
1:1 Data Links: *SECTION 7 Communications for 1:1 Data Links*
NT Links: *SECTION 8 NT Link Communications*

An overview of the PC Setup settings for the Serial Communications Board is given next. The default setting for each word is all zeros (0000).

Word(s)	Bit(s)	Function	Applicable mode
DM 6550 (port 2) DM 6555 (port 1)	00 to 03	Port settings 0: Standard (1 start bit, 7-bit data, even parity, 2 stop bits, 9,600 bps) 1: Settings in DM 6551 (DM 6556 for port 1)	Host Link, no-protocol, protocol macros
	04 to 07	CTS control settings (only port 1 enabled) 0: Disable; 1: Set	Host Link, no-protocol, 1:1 Data Links
	08 to 11	Link words for 1:1 Data Link (when bits 12 to 15 are set to 3) 0: LR 00 to LR 63; 1: LR 00 to LR 31; 2: LR 00 to LR 15 or Maximum Programmable Terminal unit number (when bits 12 to 15 are set to 5) 1 to 7 (BCD)	1:1 Data Link master (link words) or NT Link (max. unit number)
	12 to 15	Serial communications mode 0: Host Link; 1: No-protocol; 2: 1:1 Data Link slave; 3: 1:1 Data Link master; 4: NT Link in 1:1 mode; 5: NT Link in 1:N mode; 6: Protocol macro	All modes
DM 6551 (port 2) DM 6556 (port 1)	00 to 07	Baud rate 00: 1.2K, 01: 2.4K, 02: 4.8K, 03: 9.6K, 04: 19.2K	Host Link, no-protocol, protocol macros
	08 to 15	Frame format Start / Length / Stop / Parity 00: 1 bit / 7 bits / 1 bit / Even 01: 1 bit / 7 bits / 1 bit / Odd 02: 1 bit / 7 bits / 1 bit / None 03: 1 bit / 7 bits / 2 bit / Even 04: 1 bit / 7 bits / 2 bit / Odd 05: 1 bit / 7 bits / 2 bit / None 06: 1 bit / 8 bits / 1 bit / Even 07: 1 bit / 8 bits / 1 bit / Odd 08: 1 bit / 8 bits / 1 bit / None 09: 1 bit / 8 bits / 2 bit / Even 10: 1 bit / 8 bits / 2 bit / Odd 11: 1 bit / 8 bits / 2 bit / None	Host Link, no-protocol, protocol macros
DM 6552 (port 2) DM 6557 (port 1)	00 to 15	Transmission delay 0000 to 9999 (BCD): Set in units of 10 ms, e.g., a setting of 0001 equals 10 ms	Host Link, no-protocol
DM 6553 (port 2) DM 6558 (port 1)	00 to 07	Host Link unit number 00 to 31 (BCD)	Host Link
	08 to 11	Start code enable 0: Disable; 1: Set	No-protocol
	12 to 15	End code enable 0: Disable (number of bytes received) 1: Set (specified end code) 2: CR, LF	No-protocol
DM 6554 (port 2) DM 6559 (port 1)	00 to 07	Start code (No-protocol) 00 to FF (hexadecimal)	No-protocol
	08 to 15	When bits 12 to 15 of DM 6553 or DM 6558 are set to 0 Hex: Number of bytes received 00: Default setting (256 bytes) 01 to FF: 1 to 255 bytes When bits 12 to 15 of DM 6553 or DM 6558 are set to 1 Hex: End code (No-protocol) 00 to FF (hexadecimal)	No-protocol

3-3 Control Bits, Flags, and Status Information

Control bits, flags, and status information for the Serial Communications Board is available in the Inner Board Slot 1 area. The addresses in this area are as follows:

Inner Board Slot 1 Area: IR 200 to IR 207

The following bits are often used in Protocol Macro Mode. Refer to *5-6 Control Bits, Flags, and Status Information* for details.

Word	Bits	Function		Communications modes
IR 200	00	Serial Communications Board Hardware Error Flag		All modes
	01	Board Identification Error Flag (hardware error)		
	02	Protocol Data Error Flag		Protocol macro
	03 to 10	Not used.		
	11	Port 2 Protocol Macro Execution Error Flag		
	12	Port 1 Protocol Macro Execution Error Flag		
	13	Port 2 PC Setup Error Flag		All modes
	14	Port 1 PC Setup Error Flag		
	15	PC Setup Error Flag		
IR 201	00 to 03	Port 1	Error Code 0: Normal operation 1: Parity error 2: Framing error 3: Overrun error 4: FCS error 5: Timeout error 6: Checksum error 7: Command error	All modes
	04		Communications Error Flag	
	05		Transmission Enabled Flag Turns ON when transmission is enabled, OFF when transmissions are being processed for TXD(—). Use with flag as an execution condition for TXD(—) when using No-protocol or Host Link Mode.	Host Link or No-protocol
	06		Reception Completed Flag Turns ON when receptions for RXD(—) have been completed in No-protocol Mode.	
	07		Reception Overflow Flag In No-protocol Mode, turns ON when the next data is received before previous data is read out using RXD(—).	
			Sequence Abort Completion Flag	Protocol macro
	08 to 11	Port 2	Error Code 0: Normal operation 1: Parity error 2: Framing error 3: Overrun error 4: FCS error 5: Timeout error 6: Checksum error 7: Command error	All modes
	12		Communications Error Flag	
	13		Transmission Enabled Flag Turns ON when transmission is enabled, OFF when transmissions are being processed for TXD(—). Use with flag as an execution condition for TXD(—) when using No-protocol or Host Link Mode.	Host Link or No-protocol
	14		Reception Completed Flag Turns ON when receptions for RXD(—) have been completed in No-protocol Mode.	
	15		Reception Overflow Flag In No-protocol Mode, turns ON when the next data is received before previous data is read out using RXD(—).	
			Sequence Abort Completion Flag	Protocol macro

Word	Bits	Function		Communications modes
IR 202	00 to 07	Port 1	Communicating with PT Flags (Bits 00 to 07 are flags for PTs 0 to 7.)	NT Link in 1:N mode
			Repeat counter PV (00 to FF hexadecimal)	Protocol macro
	00 to 15		Reception counter The number of bytes of data received in No-protocol Mode (Hex). Reset to 0 when data is read out using RXD(—).	No-protocol
IR 203	00 to 07	Port 2	Communicating with PT Flags (Bits 00 to 07 are flags for PTs 0 to 7.)	NT Link in 1:N mode
			Repeat counter PV (00 to FF hexadecimal)	Protocol macro
	00 to 15		Reception counter The number of bytes of data received in No-protocol Mode (Hex). Reset to 0 when data is read out using RXD(—).	No-protocol
IR 204	00	Port 1	Tracing Flag	Protocol macro
	01	Port 2		
	02 to 05	Not used.		
	06	Port 1	Echoback Disable Mode Monitor Flag (when modem control is designated) (See note.)	
	07	Port 2		
	08 to 11	Port 1	Protocol Macro Error Code 0: Normal operation 1: No protocol macro function 2: Sequence number error 3: Data read/write area overflow 4: Protocol data grammar error 5: Protocol macro execution error during port initialization	
	12 to 15	Port 2		
IR 205	00 to 03	Port 1	Completed Reception Case Number	Protocol macro
	04 to 07		Completed Step Number	
	08 to 14		Not used.	
	15		IR 204 (bits 08 to 11) Data Stored Flag 0: No data stored; 1: Data stored	
IR 206	00 to 03	Port 2	Completed Reception Case Number	Protocol macro
	04 to 07		Completed Step Number	
	08 to 14		Not used.	
	15		IR 204 (bits 12 to 15) Data Stored Flag 0: No data stored; 1: Data stored	
IR 207	00	Port 1	Serial Communications Port Restart Bits	All modes
	01	Port 2		
	02	Port 1	Continuous Trace Start/Stop Bits	Protocol macro
	03	Port 2		
	04	Port 1	Shot Trace Start/Stop Bits	
	05	Port 2		
	06	Port 1	Echoback Disable Mode Flag (when modem control is designated) (See note.)	
	07	Port 2		
	08	Port 1	Protocol Macro Executing Flag (instruction execution)	No-protocol or Protocol macro
	09		Transfer Step Error Processing Flag	Protocol macro
	10		Sequence End Completion Flag	
	11		Forced Abort Bit	
	12	Port 2	Protocol Macro Executing Flag (instruction execution)	No-protocol or Protocol macro
	13		Transfer Step Error Processing Flag	Protocol macro
	14		Sequence End Completion Flag	
	15		Forced Abort Bit	
IR 208 to IR 215	00 to 15	Not used.		---

Word	Bit(s)	Function
254	15	**Inner Board Error Flag** Turns ON when an error occurs in an Inner Board mounted in slot 1 or slot 2. The error code for slot 1 is stored in AR 0400 to AR 0407 and the error code for slot 2 is stored in AR 0408 to AR 0415.
AR 04	00 to 07	**Slot 1 Inner Board Error Code (Hex)** 00: Normal 01, 02: Hardware error 10: Serial Communications Board error

Note Supported on products with lot number of No. 0320* or later.

Reading lot numbers:

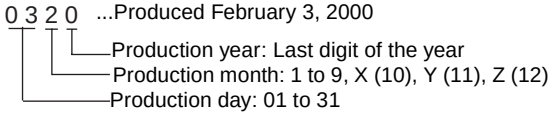

SECTION 4
Host Link Communications

This section describes the procedure and other information required to use Host Link communications.

4-1 Host Link Communications 34
4-1-1 Host Link Communications 35
4-1-2 Host Link Specifications 36
4-2 Application Procedure 36
4-3 Connections 39
4-3-1 Types of Connection 39
4-3-2 Standard Cables from Board to Personal Computer 44
4-4 Host Link Communications 45
4-4-1 Protocol 45
4-4-2 Example Programs 48
4-4-3 Host Link Commands 51
4-4-4 End Codes 52
4-5 Changes from Previous Products 53
4-5-1 RS-232C Ports 53
4-5-2 RS-422A/485 Ports 55

4-1 Host Link Communications

A Host Link System can be used to send C-mode Host Link commands from a host (e.g., personal computer or PT) to a PC to read/write I/O memory, control operating modes, etc. The PC can also use the TXD(—) instruction to send specified I/O memory data to the host for slave-initiated communications.

Refer to the *CQM1H-series PC Programming Manual* for details on C-mode commands.

Host-initiated Communications

Communications in a Host Link System are normally started by a host computer.

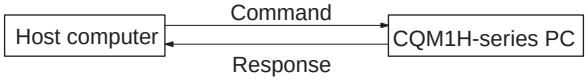

The host sends a command to the PC. The PC processes the command and returns a response to the host computer. This process is repeated, allowing the host computer to monitor and control PC operation.

Slave-initiated Communications

The PC can also initiate communications with the host to send data, as may be necessary when errors occur on the line controlled by the PC or to confirm the operating status of the host.

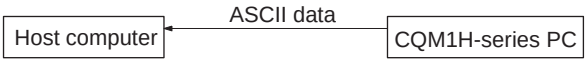

When the TXD(—) instruction is executed in the ladder program of the PC, the contents of the I/O memory words specified for the instruction is converted to ASCII and sent to the host. There is no response to this transmission.

TXD(—) Instruction

TXD(48) reads N bytes of data beginning from words S, converts it to ASCII, and outputs the data from the specified port as a Host Link command. Up to 122 bytes (61 words) of data can be sent. Refer to the *CQM1H-series PC Programming Manual* for details.

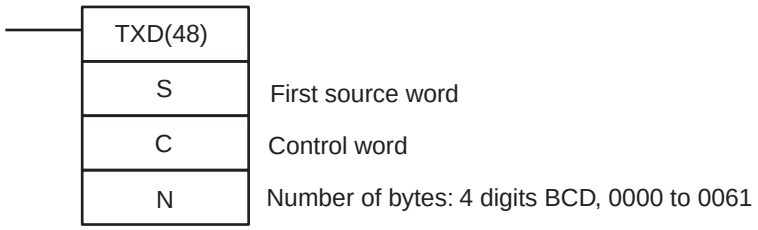

The format of the Host Link command generated by TXD(—) is shown below. The command header code is EX and is followed by the specified data converted to ASCII. There is no response to the EX command.

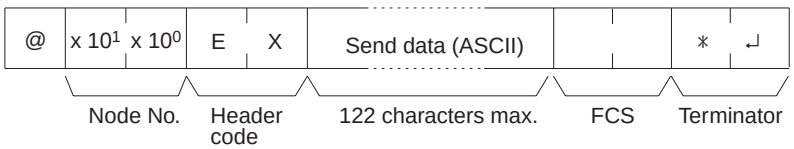

Note If the PC is sending a response to a Host Link command when the TXD(—) instruction is executed, the EX command for TXD(—) will be sent after the response.

If TXD(—) is executed in Host Link Mode, the specified data is converted to ASCII before being sent. If TXD(—) is executed in No-protocol Mode, the specified data is sent without conversion.

4-1-1 Host Link Communications

Host Link communications are supported by all CQM1H-series CPU Units. A Serial Communications Board can be used to connect a single PC to more than one host computer for Host Link communications, including slave-initiated communications. Host Link communications provide the following features.

Connect One Computer to Multiple PCs

An RS-422A/485 port can be used to connect one host computer to up to 32 CQM1H-series PCs.

Computer Monitoring and Control of PCs

Host Link communications enable the host computer to monitor or control PC operations and to read and write I/O memory in the PCs.

Redundant Error Checking

Both vertical and horizontal (FCS) parity checks are performed on communications data to achieve essentially error-free communications. Combining error checking and retry processing goes one step further to eliminate nearly all the effects of communications problems.

Simultaneous Usage of Both Ports

The Serial Communications Board provides two serial communications ports that can be used simultaneously to connect to two different networks of host computers in addition to the connections made directly from the built-in CPU Unit ports.

Slave-initiated Communications

Communications can be performed either by sending a command from a host and having the PC return a response, or by sending data from a PC to the host.

Note A Host Link connection can also be used to connect the PC to a Programming Device running on a personal computer. The following two modes can be used to connect to computers running Programming Devices. Only the Host Link Mode can be used for the Serial Communications Board.

Serial communications mode	Features
Host Link	Functions as a communications protocol with standard host computers. Either 1:1 or 1:N connections are possible. Slower than a peripheral bus connection. Connection is possible through a modem or Optical Link Adapter, and long-distance and 1:N connections are possible using RS-422A/485.
Peripheral bus	Enables high-speed communications. A peripheral bus connection is thus the normal mode used to connect to a computer running the CX-Programmer. Only 1:1 connections are possible. With the CQM1H, the baud rate of the Programming Device is detected when the connection is made.

4-1-2 Host Link Specifications

Item	Description		
Communications mode	Half-duplex (Full-duplex for slave-initiated communications)		
Synchronization	Start-stop (asynchronous mode)		
Baud rate (See note 1.)	RS-232C port and RS-422A/485 ports: 1,200/2,400/4,800/9,600/19,200 bps Default setting: 9,600 bps		
Communications distance (See note 1.)	RS-232C port: 15 m max. (See note 2.) RS-442A/485 port: 500 m max. (The total combined cable length is 500 m max. T-branch lines must be a maximum of 10 m long.)		
Connection configuration	RS-232C port: 1:1 (1:N (N = 32 Units max.) is possible using an Converting Link Adapters.) RS-422A/485 port: 1:N (N = 32 Units max.)		
Number of connected Units	32 Units max. (unit numbers 0 to 31; unit number 0 is set for 1:1 connection)		
Frame structure	C-mode Host Link commands Header: @, address: (Host Link unit number) 0 to 31 (BCD) Data: Header code + text Error check code: FCS Terminator: *+CR		
Error check codes	Vertical parity: Even, odd. or none FCS (horizontal parity converted to ASCII)		
Command flow and support	**Command flow**	**Commands**	**Contents**
	Host computer to PC	C-mode Host Link commands	1:1 or 1:N communications with directly connected PCs (The specified frame format must be prepared on the host computer and then sent.)
	PC to host computer	Data only	Communications using TXD(—) from CPU Unit. No response from host. Connection between the host computer and PC must be 1:1.
Transmission delay time	Host computer to PC The delay is from the return of a response by the PC until a response can be returned to the next command received from the host.		0 to 99,990 ms (set in PC Setup in 10-ms units)
	PC to host computer The delay is from the beginning of TXD(—) execution until execution of the next TXD(—) can be started.		

Note
1. Confirm the baud rates and communications distance supported by connected devices.
2. The maximum cable length for RS-232C is 15 m.

4-2 Application Procedure

1,2,3...
1. Turn OFF the power supply to the PC.
2. Mount the Board.
3. Connections

   Connect the external devices using RS-232C or RS-422 cables. The TERM and WIRE switches on the front panel of the Board must be set if the Board is connected using the RS-4522A/485 port.

   The host computer can be connected to a PC 1:1, or NT-AL001-E Converting Link Adapters can be used to convert from RS-232C to RS-422A/485 to connect the host computer to PCs 1:N. Standard connection examples

are shown below. Perform other processing as required, such as setting switches on the external device(s).

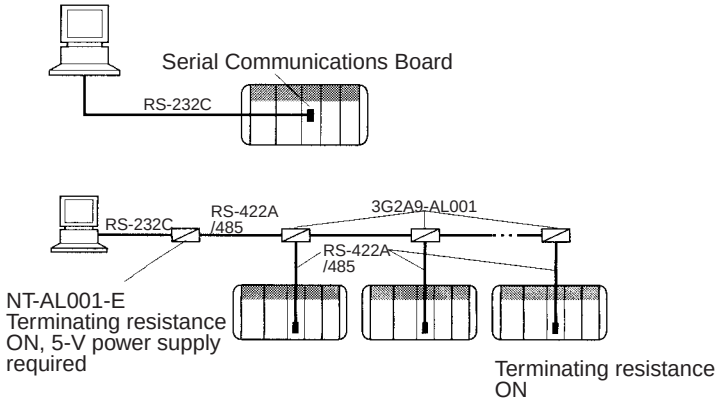

The CPU Unit can be connected to a Programming Console, the CX-Programmer, or the CX-Protocol as required.

4. Turn ON power.
5. Set the PC Setup settings for the Serial Communications Board.

   Use a Programming Console, the CX-Programmer, or the CX-Protocol to set the settings in the PC Setup between DM 6550 and DM 6559.

   Note The settings stored in these words are read constantly; the PC does not need to be restarted or reset when changes are made to the settings. They will be updated automatically as soon as they are changed.

   The following table shows the standard settings.

Port 1	Port 2	Bit(s)	Default setting	Function
DM 6555	DM 6550	00 to 03	0 Hex	Standard port settings (1 start bit, 7-bit data, even parity, 2 stop bits, 9,600 bps)
		04 to 07	0 Hex	CTS control disabled
		08 to 11	---	Not used.
		12 to 15	0 Hex	Communications mode 0: Host Link
DM 6556	DM 6551	00 to 07	---	Baud rate: invalid
		08 to 15	---	Frame format: Invalid
DM 6557	DM 6552	00 to 15	0000 Hex	Transmission delay: 0 ms
DM 6558	DM 6553	00 to 07	00 BCD	Node number 00
		08 to 11	---	Not used.
		12 to 15	---	Not used.

6. Program the host and the CPU Unit and execute the programs.

Host-initiated Communications: Host Link Commands
A program must be prepared in the host to send Host Link commands to the PC and receive responses.

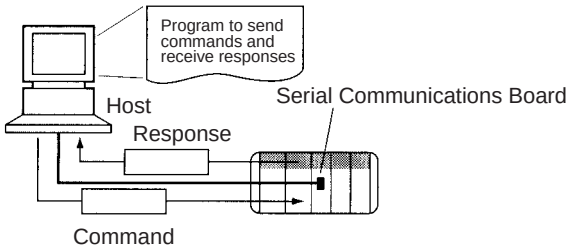

PC-initiated Communications: TXD(—) Instruction
TXD(—) must be included in the ladder program to send data from the PC to the host.

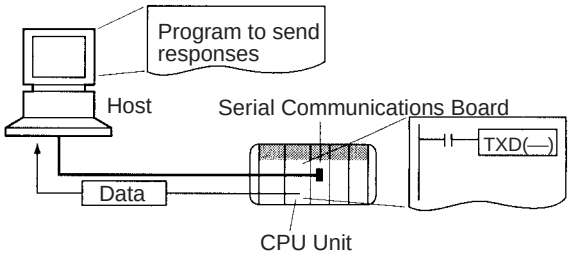

4-3 Connections

4-3-1 Types of Connection

Port connections for Host Link communications are shown in the following table. Up to 32 nodes can be connected for 1:N connections.

Port	Configuration	Schematic diagram
RS-232C	1:1	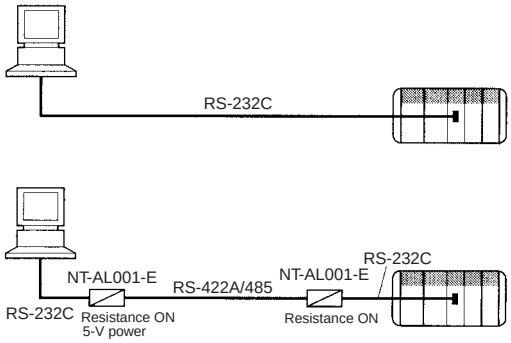
RS-232C	1:N	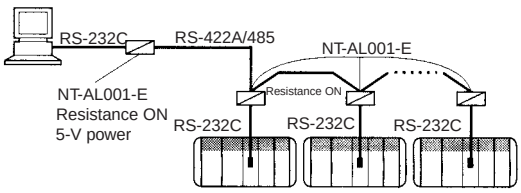
RS-422A/485	1:1	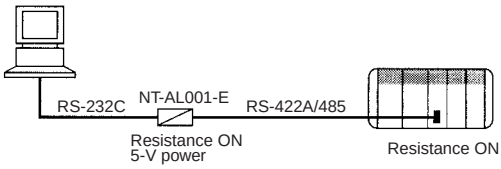
RS-422A/485	1:N	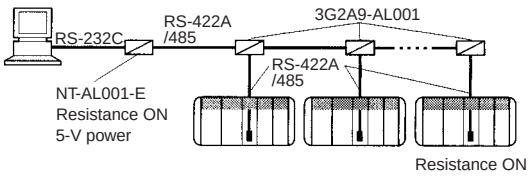

Note

1. Four-wire connections must be used for RS-422A/485 connections with Host Link communications.
2. “Resistance ON” indicates the terminating resistance must be turned ON.
3. “5-V power” indicates that a 5-V power supply is required for the Link Adapter. Refer to the Link Adapter manual for details. A 5-V power supply is not required for a Link Adapter connected to a Serial Communications Board because power is supplied from pin 6 of the connector.
4. The maximum cable length for RS-232C is 15 m.

Connection Examples

The connection examples in the remainder of this section show only the basic connection diagrams. We recommend that appropriate noise countermeasures be taken in actual applications, including the use of shielded twisted-pair cables. Refer to *2-3 Wiring* for actual wiring methods.

Host Computer Connections

1:1 Connections Using RS-232C Ports

IBM PC/AT or Compatible Computers

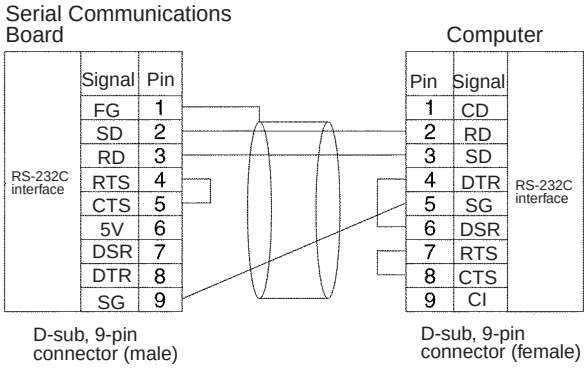

Using NT-AL001-E Converting Link Adapters

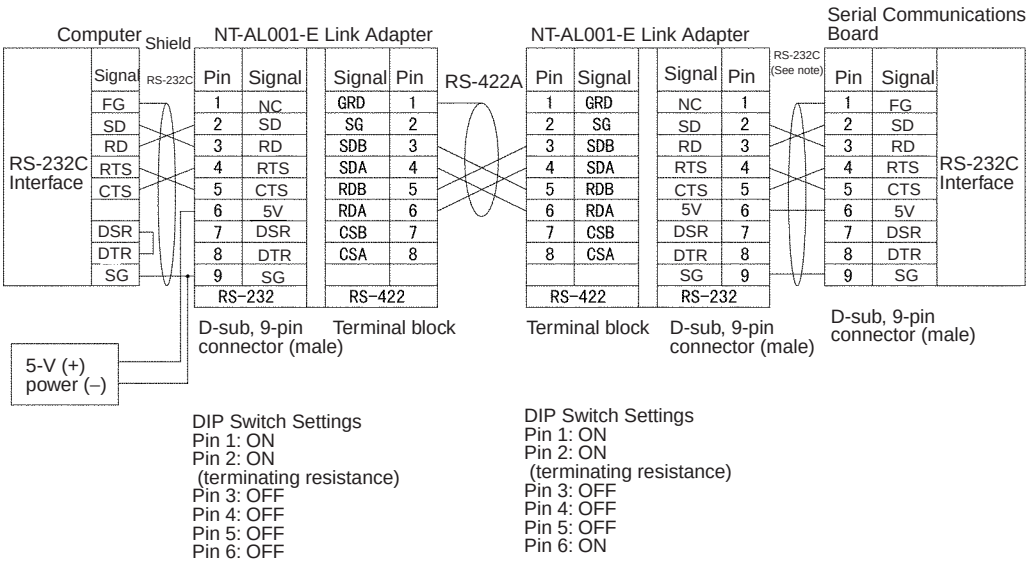

Note We recommend using the following NT-AL001-E Link Adapter Connecting Cables to connect to NT-AL001-E Link Adapters.

XW2Z-070T-1: 0.7 m
XW2Z-200T-1: 2 m

⚠ **Caution** Do not use the 5-V power from pin 6 of the RS-232C port for anything but the NT-AL001-E Link Adapter. Using this power supply for any other external device may damage the Serial Communications Board or the external device.

1:N Connections Using RS-232C Ports

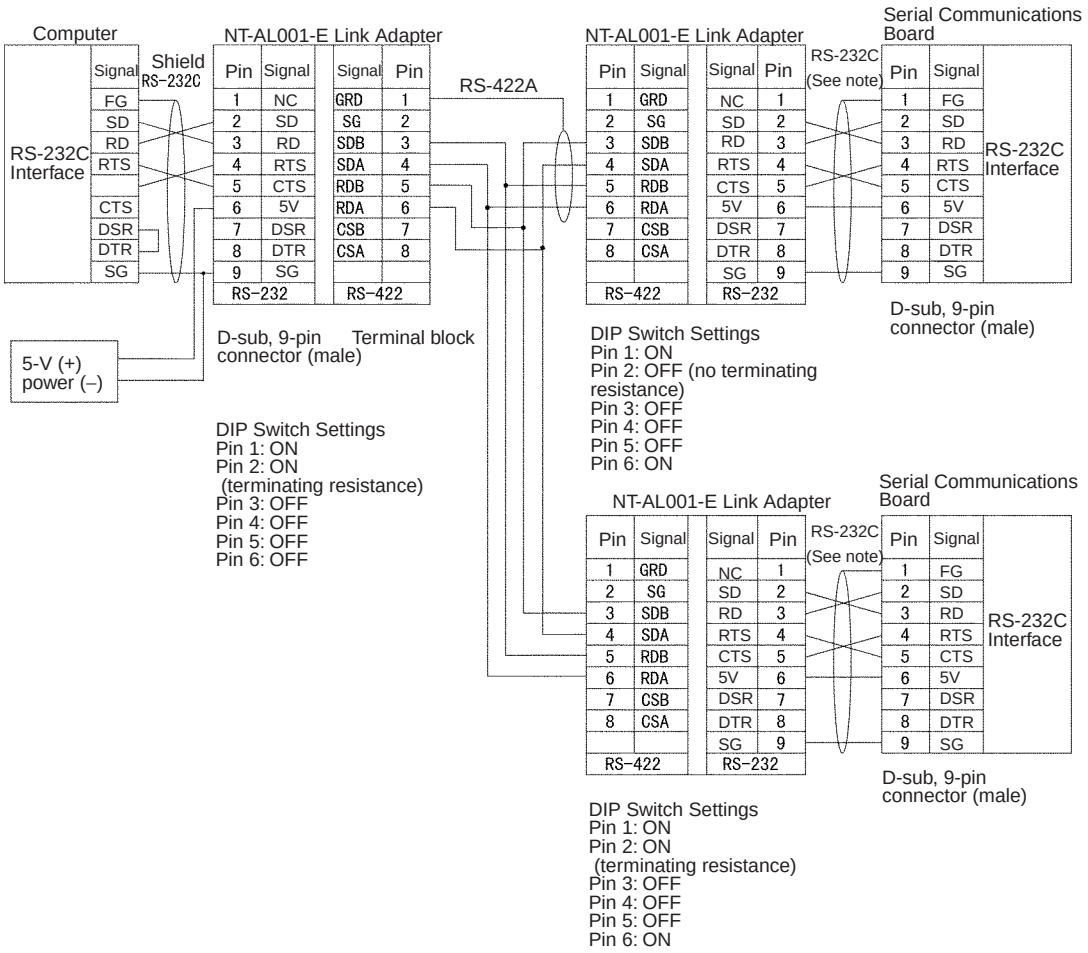

Note We recommend using the following NT-AL001-E Link Adapter Connecting Cables to connect to NT-AL001-E Link Adapters.

XW2Z-070T-1: 0.7 m
XW2Z-200T-1: 2 m

1:1 Connections Using RS-422A/485 Ports

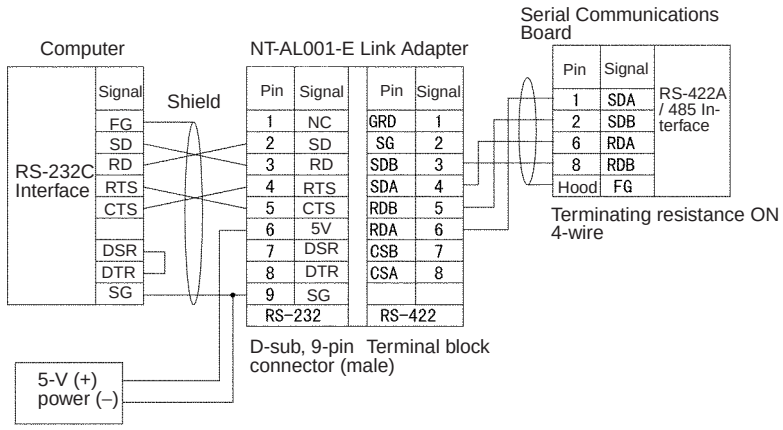

DIP Switch Settings
Pin 1: ON
Pin 2: ON
(terminating resistance)
Pin 3: OFF
Pin 4: OFF
Pin 5: OFF
Pin 6: OFF

1:N Connections Using RS-422A/485 Ports

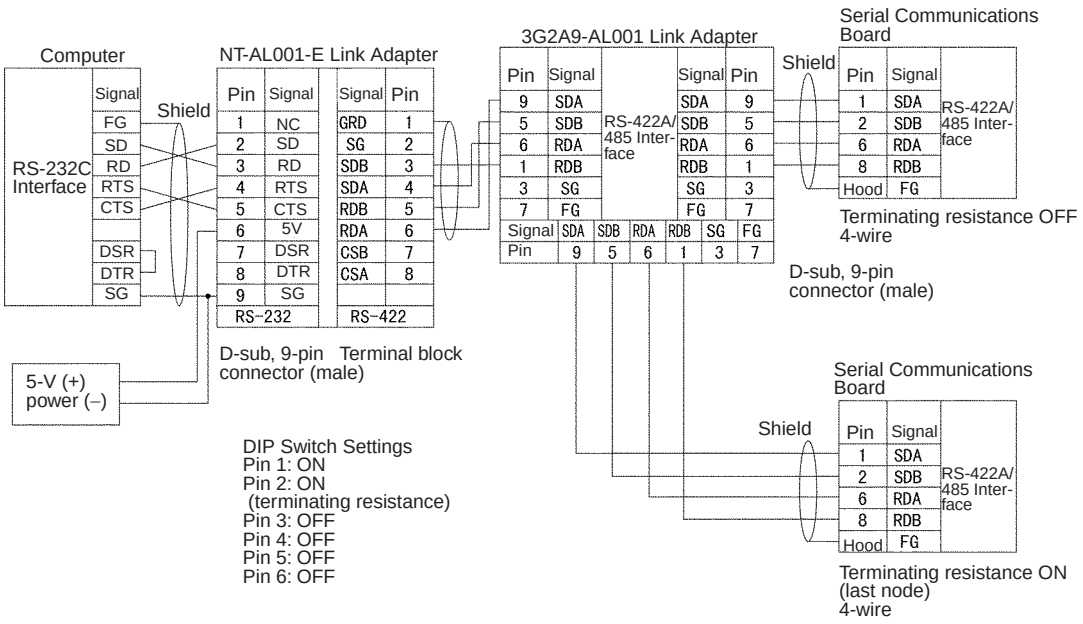

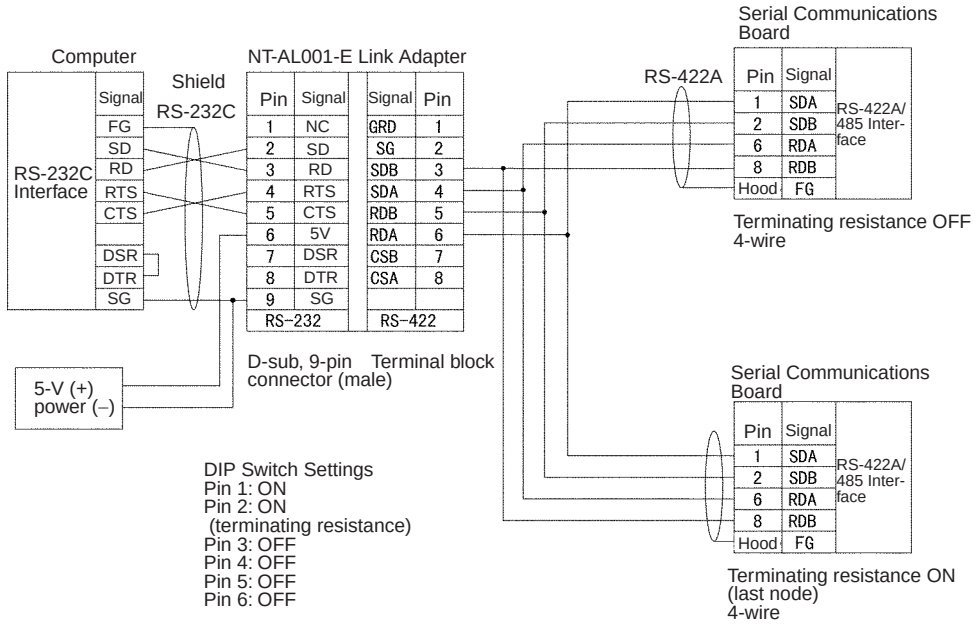

4-3-2 Standard Cables from Board to Personal Computer

Board port	Computer	Computer port	Network type	Model	Length	Remarks
RS-232C port (D-sub, 9-pin female)	IBM PT/AT or compatible	D-sub, 9-pin male	Host Link (SYSMAC WAY)	XW2Z-200S-CV	2 m	Conforms to ESD.
				XW2Z-500S-CV	5 m	

The following Connecting Cables can be used to connect an RS-232C to the computer.

Board port	Computer	Computer port	Network type	Model	Length	Remarks
RS-232C port (D-sub, 9-pin female)	IBM PT/AT or compatible	D-sub, 9-pin male	Host Link (SYSMAC WAY)	XW2Z-200S-V	2 m	---
				XW2Z-500S-V	5 m	

Preparing an RS-232C Cable for the Computer

The following cables and connectors can be used to manufacture a cable to connect the Serial Communications Board to the PC.

Applicable Connectors

The following connector connects to the Serial Communication Board.

Name	Model	Specifications	
Socket	XM2A-0901	9-pin male	Used together (provided with Board).
Hood	XM2S-0911-E	For 9-pin socket, metric screws, ESD countermeasures	

The following connector connects to an IBM PC/AT or compatible

Name	Model	Specifications	
Socket	XM2D-0901	9-pin male	Used together.
Hood	XM2S-0913	For 9-pin socket, inch screws	

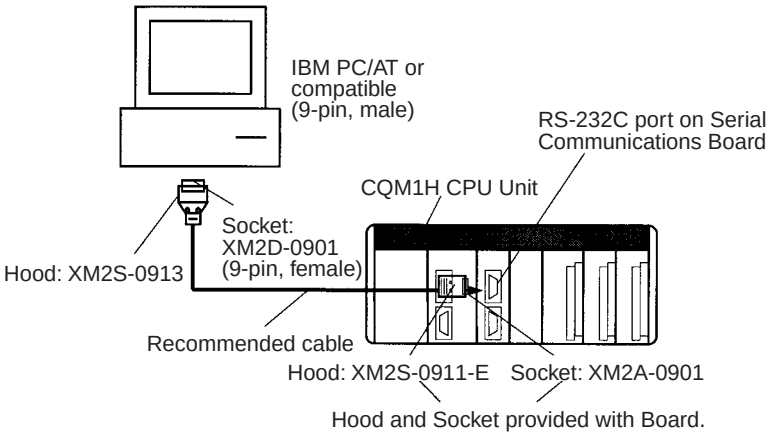

Recommended Cables

UL2464 AWG28×5P IFS-RVV-SB (UL-approved, Fujikura Ltd.)
AWG28×5P IFVV-SB (not UL-approved, Fujikura Ltd.)

UL2464-SB (MA) 5P×28AWG (7/0.127) (UL-approved, Hitachi Cable, Ltd.)
CO-MA-VV-SB 5P×28AWG (7/0.127) (not UL-approved, Hitachi Cable, Ltd.)

4-4 Host Link Communications

4-4-1 Protocol

Host Link communications are executed by means of an exchange of commands and responses between the host computer and the PC. The command or response data that is transferred in one exchange is known as a frame and one frame can contain up to 131 characters of data.

The frame formats for Host Link commands transmitted from the host computer and responses returned from the PC are described below. The PC automatically returns an ASCII-code response when it receives an ASCII-code command from the host computer. The host computer must have a program that controls the transmission and reception of the commands and responses.

Command Frame Format

When transmitting a command from the host computer, prepare the command data in the format shown below.

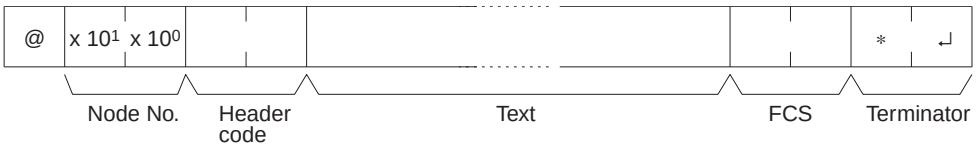

The header code and text depend on the Host Link command being transmitted. When a compound command is transmitted, there will be a second subheader code.

The FCS (Frame Check Sequence) code is calculated at the host computer and set in the command frame. The FCS calculation is described later in this section.

The command frame may be up to 131 characters long. A command of 132 characters or more must be divided into more than one frame. To split the command, use a carriage return delimiter (↵, CHR$(13)) instead of a terminator. A terminator must be used at the end of the last frame.

When dividing commands such as WR, WL, WC, or WD that execute write operations, be careful not to divide into separate frames data that is to be written into a single word. You must divide frames so that they coincide with the divisions between words.

Item	Function
@	An "@" symbol must be placed at the beginning of every command.
Destination Node No.	Identify the PCs by the Host Link node numbers (0 to 31) set in DM 6558 and DM 6553 of the PC Setup.
Header code	Set the 2-character command code.
Text	Set the command parameters.
FCS	Set a 2-character Frame Check Sequence code.
Terminator	Set two characters, "*" and the carriage return (CHR$(13)) to indicate the end of the command.

Normal Response Frame Format

A normal response from the PC is returned in the format shown below. Prepare a program at the host so that the response data can be interpreted and processed.

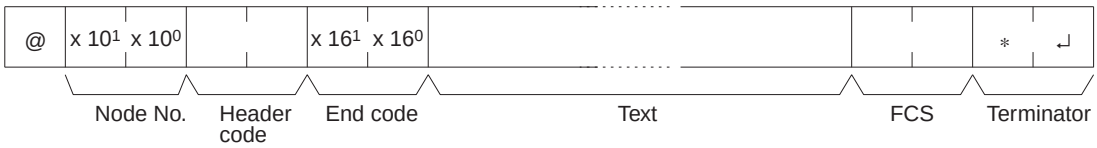

The header code and text depend on the Host Link command that was received. The end code indicates the completion status of the command (e.g., whether or not an error has occurred).

When the response is longer than 131 characters, it will be divided into more than one frame. A carriage return delimiter (↵, CHR$(13)) instead of a terminator will automatically be set at the end of the frame. A terminator will be set at the end of the last frame.

Item	Function
@	An "@" symbol is placed at the beginning of every response.
Local Host Link Node No.	The PC's Host Link node number set in DM 6553 or DM 6558 of the PC Setup.
Header code	The 2-character command code is returned.
End code	The status of command execution is returned (normal end code).
Text	The results of the command are returned.
FCS	The 2-character Frame Check Sequence code is returned.
Terminator	Two characters, "*" and the carriage return (CHR$(13)) indicate the end of the response.

Error Response Frame Format

An error response from the PC is returned in the format shown below. Prepare a program at the host so that the response data can be interpreted and processed.

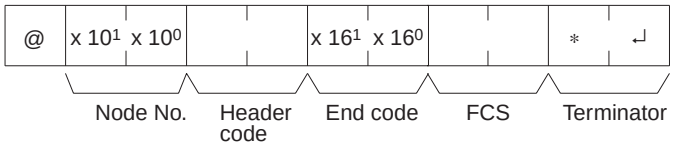

The header code and text depend on the Host Link command that was received. The end code indicates the completion status of the command (e.g., whether or not an error has occurred).

Item	Function
@	An "@" symbol is placed at the beginning of every response.
Local Host Link Node No.	The PC's Host Link node number set in DM 6553 or DM 6558 of the PC Setup.
Header code	The 2-character command code is returned.
End code	The status of command execution is returned (error code).
FCS	The 2-character Frame Check Sequence code is returned.
Terminator	Two characters, "*" and the carriage return (CHR$(13)) indicate the end of the response.

FCS (Frame Check Sequence)

When a frame is transmitted, an FCS code is placed just before the delimiter or terminator in order to check whether an error has occurred in the transmission. The FCS is 8-bit data converted into two ASCII characters. The 8-bit data is the result of an EXCLUSIVE OR performed on the data from the beginning of the frame until the end of the text in that frame (i.e., just before the FCS). Calculating the FCS each time a frame is received and checking the

result against the FCS that is included in the frame makes it possible to check for data errors in the frame.

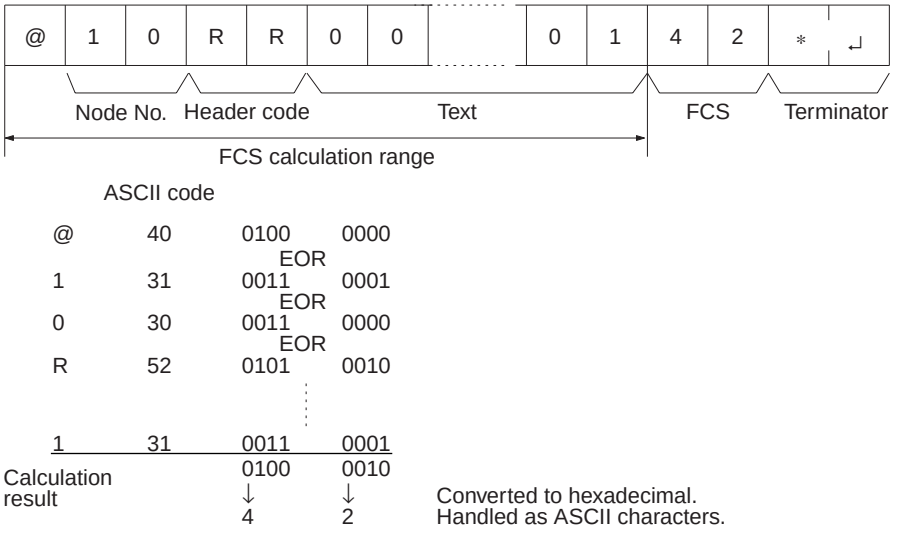

Communications Sequence

The right to send a frame is called the “transmission right.” The Unit that has the transmission right is the one that can send a frame at any given time. The transmission right is traded back and forth between the host computer and the PC each time a frame is transmitted. An example sequence for multiframe communications between the host computer and PC is described below. Multiframe communications are handled by exchanging delimiters and then using terminators to indicate the last frame.

- The host computer sets a delimiter at the end of the first command frame and transmits the frame.
- When the PC receives the delimiter, it returns the same delimiter to the host computer.
- After receiving the delimiter from the PC, the host computer transmits the next frame.
- Delimiters are used to send the rest of the frames.
- When the host computer sends the last command frame, it sets a terminator at the end.
- When the PC receives a frame with a terminator, it sends the response.
- If there was more than one response frame, delimiters would be used here too.

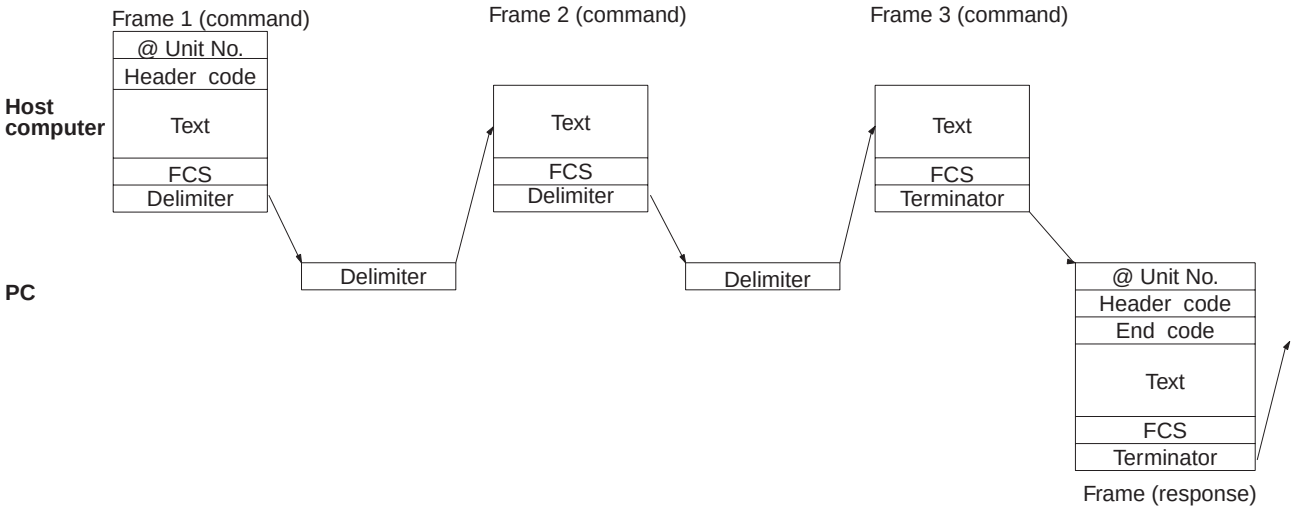

Using the TXD (—) Instruction

The TXD(—) instruction can be used to transmit data from the PC's data area to the host computer. There is no response from the host computer. The TXD(—) instruction will be executed after the response has been transmitted if TXD(—) is executed while a response to a Host Link command is being returned to the host computer.

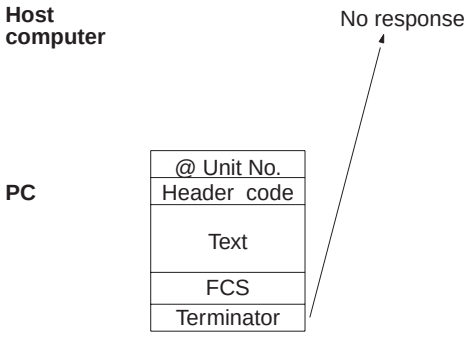

4-4-2 Example Programs

Command Transmission

The following type of program must be prepared in the host computer to receive the data. This program allows the computer to read and display the data received from the PC while a Host Link read command is being executed to read data from the PC.

```
10 'CQM1H SAMPLE PROGRAM FOR EXCEPTION
20 CLOSE 1
30 CLS
40 OPEN "COM:E73" AS #1
50 *KEYIN
60 INPUT "DATA --------",S$
70 IF S$=" " THEN GOTO 190
80 PRINT "SEND DATA = ";S$
90 ST$=S$
100 INPUT "SEND OK? Y or N?=",B$
110 IF B$="Y" THEN GOTO 130 ELSE GOTO *KEYIN
120 S$=ST$
130 PRINT #1,S$                          'Sends command to PC
140 INPUT #1,R$                          'Receives response from PC
150 PRINT "RECV DATA = ";R$
160 IF MID$(R$,4,2)="EX" THEN GOTO 210  'Identifies command from PC
170 IF RIGHT$(R$,1)<>"*" THEN S$=" ":GOTO 130
180 GOTO *KEYIN
190 CLOSE 1
200 END
210 PRINT "EXCEPTION!! DATA"
220 GOTO 140
```

Example Program for FCS

This example shows a BASIC subroutine program for executing an FCS check on a frame received by the host computer.

```
400 *FCSCHECK
410 L=LEN(RESPONSE$)
420 Q=0:FCSCK$=" "
430 A$=RIGHT$(RESPONSE$,1)
440 PRINT RESPONSE$,A$,L
450 IF A$="*" THEN LENGS=LEN(RESPONSE$)-3
                ELSE LENGS=LEN(RESPONSE$)-2
460 FCSP$=MID$(RESPONSE$,LENGS+1,2) '. . . . FCS data received
470 FOR I=1 TO LENGS '. . . . . Number of characters in FCS
```

```
480 Q=ASC(MID$(RESPONSE$,I,1)) XOR Q
490 NEXT I
500 FCSD$=HEX$(Q)
510 IF LEN(FCSD$)=1 THEN FCSD$="0"+FCSD$ 'FCS result
520 IF FCSD$<>FCSP$ THEN FCSCK$="ERR"
530 PRINT"FCSD$=";FCSD$,"FCSP$=";FCSP$,"FCSCK$=";FCSCK$
540 RETURN
```

Note

1. Normal reception data includes the FCS, delimiter or terminator, and so on. When an error occurs in transmission, however the FCS or some other data may not be included. Be sure to program the system to cover this possibility.
2. In this program example, the CR code (CHR$(13)) is not entered for RESPONSE$. When including the CR code, make the changes in lines 430 and 450.

TXD(—) Application Example

This example shows a program for using the RS-232C port in the Host Link mode to transmit 10 bytes of data (DM 0000 to DM 0004) to a computer. From DM 0000 to DM 0004, “1234” is stored in every word.

The default values are assumed for all of the PC Setup (i.e., the RS-232C port is used in Host Link mode, the node number is 00, and the standard communications parameters are used.)

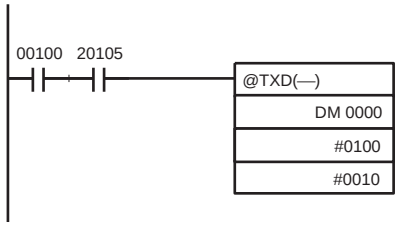

If SR 20105 (the Transmission Ready Flag) is ON when IR 00100 turns ON, ten bytes of data (DM 0000 to DM 0004) will be transmitted.

The transmitted data will appear on the host computer's screen as follows, assuming the text being sent is "1234" in all specified words:
@00EX123412341234123459*CR

Communications Control Signals and Communications Timing

The PC Setup has a setting that can be used to enable CTS control. If CTS control is enabled, processing will be placed on standby until the CS input turns ON after the RS output ON signal is sent for a transmission from the Serial Communications Board. Connect the RS output from the host to the CS input on the Board and perform flow control at the host.

Setting a Transmission Delay

A transmission delay can be set in the PC Setup to create a minimum interval between sending a response from the PC to a Host Link command until the beginning of sending the response to the next command.

The delay is not used in the response to the first command. The delay will affect responses to other commands only if the normal time for the response comes before the time set for the transmission delay has expired.

If the delay time has already expired when the next command is received, the response will be spent immediately. If the delay time has not expired, the response will be delayed until the time set for the transmission delay has expired.

The operation of the transmission delay for responses to host commands is illustrated below.

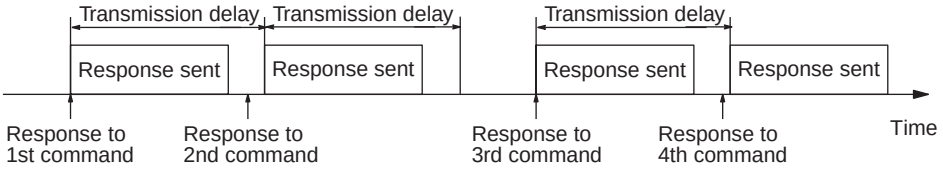

The transmission delay will also be effective in PC-initiated communications as a minimum interval between sending commands to the host.

The delay is not used in sending the first command. The delay will affect other commands only if the time set for the transmission delay has not expired when the next command is ready to be sent.

If the delay time has already expired when the next command is ready, the command will be spent immediately. If the delay time has not expired, the command will be delayed until the time set for the transmission delay has expired.

The operation of the transmission delay for PC-initiated communications is illustrated below.

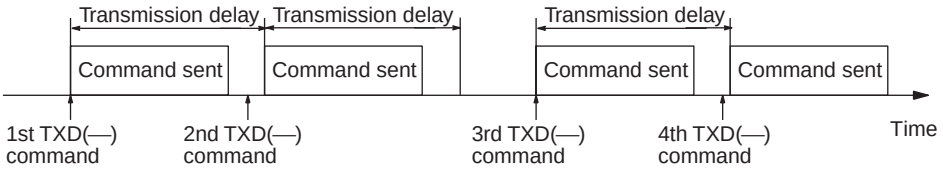

4-4-3 Host Link Commands

The Host Link commands listed in the following table can be sent to the CQM1H for Host Link communications. Refer to the *CQM1H-series Programming Manual* for details.

Header code	PC mode			Name
	RUN	MON	PRG	
RR	Valid	Valid	Valid	IR/SR AREA READ
RL	Valid	Valid	Valid	LR AREA READ
RH	Valid	Valid	Valid	HR AREA READ
RC	Valid	Valid	Valid	TC PV READ
RG	Valid	Valid	Valid	TC STATUS READ
RD	Valid	Valid	Valid	DM AREA READ
RE	Valid	Valid	Valid	EM AREA READ
RJ	Valid	Valid	Valid	AR AREA READ
WR	Not valid	Valid	Valid	IR/SR AREA WRITE
WL	Not valid	Valid	Valid	LR AREA WRITE
WH	Not valid	Valid	Valid	HR AREA WRITE
WC	Not valid	Valid	Valid	TC PV WRITE
WG	Not valid	Valid	Valid	TC STATUS WRITE
WD	Not valid	Valid	Valid	DM AREA WRITE
WE	Not valid	Valid	Valid	EM AREA WRITE
WJ	Not valid	Valid	Valid	AR AREA WRITE
R#	Valid	Valid	Valid	SV READ 1
R$	Valid	Valid	Valid	SV READ 2
R%	Valid	Valid	Valid	SV READ 3
W#	Not valid	Valid	Valid	SV CHANGE 1
W$	Not valid	Valid	Valid	SV CHANGE 2
W%	Not valid	Valid	Valid	SV CHANGE 3
MS	Valid	Valid	Valid	STATUS READ
SC	Valid	Valid	Valid	STATUS WRITE
MF	Valid	Valid	Valid	ERROR READ
KS	Not valid	Valid	Valid	FORCED SET
KR	Not valid	Valid	Valid	FORCED RESET
FK	Not valid	Valid	Valid	MULTIPLE FORCED SET/RESET
KC	Not valid	Valid	Valid	FORCED SET/RESET CANCEL
MM	Valid	Valid	Valid	PC MODEL READ
TS	Valid	Valid	Valid	TEST
RP	Valid	Valid	Valid	PROGRAM READ
WP	Not valid	Not valid	Valid	PROGRAM WRITE
QQ	Valid	Valid	Valid	COMPOUND COMMAND
XZ	Valid	Valid	Valid	ABORT (command only)
**	Valid	Valid	Valid	INITIALIZE (command only)
EX	Valid	Valid	Not valid	TXD RESPONSE (response only)
IC	---	---	---	Undefined command (response only)

4-4-4 End Codes

The response (end) codes listed in the following table are returned in the response frame for Host Link commands. When two or more errors occur, the end code for the first error will be returned.

End code	Contents	Probable cause	Corrective measures
00	Normal completion	No problem exists.	---
01	Not executable in RUN mode	The command that was sent cannot be executed when the PC is in RUN mode.	Check the relation between the command and the PC mode.
02	Not executable in MONITOR mode	The command that was sent cannot be executed when the PC is in MONITOR mode.	
03	UM write-protected	The PC's UM is write-protected.	Turn OFF pin 1 of the CPU Unit's DIP switch (SW1).
04	Address over	The program address setting in an read or write command is above the highest program address.	Check the program.
13	FCS error	The FCS is wrong.	Check the FCS calculation method. If there was influence from noise, transfer the command again.
14	Format error	The command format is wrong, or a command that cannot be divided has been divided, or the frame length is smaller than the minimum length for the applicable command.	Check the format and transfer the command again.
15	Entry number data error	The data is outside of the specified range or too long. Hexadecimal data has not been specified.	Correct the data and transfer the command again.
16	Command not supported	The operand specified in an SV Read or SV Change command does not exist in the program.	Check search data or the search starting point.
18	Frame length error	The maximum frame length of 132 bytes was exceeded. If the frame exceeds 280 bytes, the Reception Overflow Flag will be turned ON and there will not be a response.	Check the command and divide it into multiple frames if necessary.
19	Not executable	The read SV exceeded 9,999, or an I/O memory batch read was executed when items to read were not registered for compound command.	Register items to read before attempting batch read.
23	User memory protected	The UM is write-protected.	Turn OFF the write-protection
A3	Aborted due to FCS error in transmission data	An FCS error occurred in the second or later frame, or there were two bytes or less of data in an intermediate or final frame for multiple writing.	Correct the command data and transfer the command again.
A4	Aborted due to format error in transmission data	The command format did not match the number of bytes in the second or later frame.	
A5	Aborted due to entry number data error in transmission data	There was an entry number data error in the second or later frame, a data length error, or data was not set in hexadecimal.	
A8	Aborted due to frame length error in transmission data	The length of the second and later frames exceeded the maximum of 128 bytes.	

A response will not be received with some errors, regardless of the command. These errors are listed in the following table.

Error	PC operation
Parity, overrun, or framing error during command reception. (Same even for commands address to other Units.)	The Communications Error Flag will be turned ON, an error code will be registered, and receptions will be reset. (The error will be cleared automatically if communications restart normally.) The Communications Error Flags are as follows: Peripheral port: AR 0812 Built-in RS-232C port: AR 0804 Serial Communications Board port 1: IR 20104, Serial Communications Board port 2: IR 20112
A command is received that does not have the @ character at the beginning of the first frame.	The command will be discarded.
Incorrect node number (Not a local unit or over 31)	The command will be discarded.
The data in an intermediate or final frame for multiframe writes is 2 bytes or longer.	An FCS error will occur.

4-5 Changes from Previous Products

There are differences between Host Link Systems created using the CQM1H-series Serial Communications Boards in comparison to Host Link Systems created with Host Link Units and CPU Units in other PC product series. These differences are described in this section.

4-5-1 RS-232C Ports

Take the following differences into consideration when changing from an existing Host Link System to one using an RS-232C port on a CQM1H-series CPU Unit or Serial Communications Boards.

Previous products	Model number	Changes required for CQM1H-series product	
		Wiring	Other
C-series Host Link Units	3G2A5-LK201-E C500-LK203 3G2A6-LK201-E	The connector has been changed from a 25-pin to a 9-pin connector. The CQM1H-series products do not support the ST1, ST2, and RT signals and wiring them is not required.	**The following changes are necessary for systems that sync with ST1, ST2, and RT.** Synchronized transfers will no longer be possible. Half-duplex transmissions will be possible with the CQM1H-series product, but the host computer's communications program, hardware, or both will need to be altered. **The following changes are necessary for systems that did not sync with ST1, ST2, and RT.** It may be possible to use the host computer programs without alteration as long as the same communications settings (e.g., baud rate) are used. It may be necessary, however, to change programs to allow for different text lengths in frames or different CQM1H command specifications. (See note.)
	C200H-LK201	The connector has been changed from a 25-pin to a 9-pin connector.	It may be possible to use the host computer programs without alteration as long as the same communications settings (e.g., baud rate) are used. It may be necessary, however, to change programs to allow for different text lengths in frames or different CQM1H command specifications. (See note.)

Previous products	Model number	Changes required for CQM1H-series product	
		Wiring	**Other**
C-series CPU Units	SRM1 CPM1 CPM1A CPM2A/CPM2C CQM1-CPU□□-E C200HS-CPU□□-E C200HX/HG/HE-CPU□□-E C200HW-COM□□-E	No changes have been made in wiring.	It may be possible to use the host computer programs without alteration as long as the same communications settings (e.g., baud rate) are used. It may be necessary, however, to change programs to allow for different CQM1H command specifications.
CS1-series CPU Unit	CS1G/H-CPU□□	No changes have been made in wiring.	It may be possible to use the host computer programs without alteration as long as the same communications settings (e.g., baud rate) are used. It may be necessary, however, to change programs to allow for different CQM1H command specifications.
CS1-series Serial Communications Board or Unit	CS1W-SCB21/41 CS1W-SCU21	No changes have been made in wiring.	
CVM1 or CV-series CPU Units	CVM1/CV-CPU□□	No changes have been made in wiring.	It may be possible to use the host computer programs without alteration as long as the same communications settings (e.g., baud rate) are used. It may be necessary, however, to change programs to allow for different CQM1H command specifications.
CVM1 or CV-series Host Link Unit	CV500-LK201	Port 1: The connector has been changed from a 25-pin to a 9-pin connector. Port 2 set for RS-232C: The SG signal has been changed from pin 7 to pin 9.	**The following changes are necessary for half-duplex transmissions that use CD.** Check the system for timing problems when using SEND(90), RECV(98), or CMND(—) to initiate communications from the PC or timing problems in sending commands from the host computer. If necessary, switch to full-duplex transmissions. **The following changes are necessary for full-duplex transmissions that do not use CD.** Half-duplex It may be possible to use the host computer programs without alteration as long as the same communications settings (e.g., baud rate) are used. It may be necessary, however, to change programs to allow for different CQM1H command specifications.

Note The number of words that can be read and written per frame (i.e., the text lengths) when using C-mode Host Link commands is different for C-series Host Link Units and CQM1H-series Serial Communications Boards. A host computer program previously used for C-series Host Link Units may not function correctly if used for CQM1H-series PCs. Check the host computer program before using it and make any corrections required to handle different frame text lengths.

4-5-2 RS-422A/485 Ports

Take the following differences into consideration when changing from an existing Host Link System to one using an RS-422A/485 port on a CQM1H-series Serial Communications Board.

Previous products	Model number	Changes required for CQM1H-series product	
		Wiring	Other
C-series Host Link Units	3G2A5-LK201-E C200H-LK202 3G2A6-LK202-E	Wiring pins have been changed as shown below. SDA: Pin 9 to pin 1 SDB: Pin 5 to pin 2 RDA: Pin 6 to pin 6 RDB: Pin 1 to pin 8 SG: Pin 3 to Not connected FG: Pin 7 to pin Connector hood	It may be possible to use the host computer programs without alteration as long as the same communications settings (e.g., baud rate) are used. It may be necessary, however, to change programs to allow for different text lengths in frames or different CQM1H command specifications. (See note.)
C200HX/HG/HE Communications Board	C200HW-COM□□-E	No changes have been made in wiring.	It may be possible to use the host computer programs without alteration as long as the same communications settings (e.g., baud rate) are used. It may be necessary, however, to change programs to allow for different CQM1H command specifications.
CS1-series CPU Unit	CS1G/H-CPU□□	No changes have been made in wiring.	It may be possible to use the host computer programs without alteration as long as the same communications settings (e.g., baud rate) are used. It may be necessary, however, to change programs to allow for different CQM1H command specifications.
CS1-series Serial Communications Board or Unit	CS1W-SCB21/41 CS1W-SCU21		
CVM1 or CV-series CPU Units	CVM1/CV-CPU□□	No changes have been made in wiring.	It may be possible to use the host computer programs without alteration as long as the same communications settings (e.g., baud rate) are used. It may be necessary, however, to change programs to allow for different CQM1H command specifications.
CVM1 or CV-series Host Link Unit	CV500-LK201		

Note The number of words that can be read and written per frame (i.e., the text lengths) when using C-mode Host Link commands is different for C-series Host Link Units and CQM1H-series Serial Communications Boards. A host computer program previously used for C-series Host Link Units may not function correctly if used for CQM1H-series PCs. Check the host computer program before using it and make any corrections required to handle different frame text lengths.

SECTION 5
Protocol Macros

This section describes the procedure and other information required to use protocol macros.

5-1 Overview of the Protocol Macro Functions 58
5-1-1 Protocol Macros 58
5-1-2 Features 58
5-1-3 Using the Protocol Macro Function 63
5-1-4 Storage Memory 65
5-2 Restrictions in Using the CX-Protocol 65
5-3 Application Procedure 66
5-4 Connections 70
5-5 Protocol Structure 76
5-6 Control Bits, Flags, and Status Information 80
5-7 Using Protocol Macros 84
5-7-1 Executing Communications Sequences 84
5-7-2 Ladder Program Structure 86
5-7-3 Ladder Program Example 87

5-1 Overview of the Protocol Macro Functions

5-1-1 Protocol Macros

The protocol macro function is used to control devices by using the PMCR(—) instruction in the ladder program to execute the data communications sequences (protocols) with the various communications devices, such as general-purpose devices, connected to the RS-232C or RS-422A/485 port.

Standard system protocols are provided in the Serial Communications Board for controlling OMRON devices (such as Digital Controllers and Temperature Controllers).

Using the Protocol Support Tool called the CX-Protocol, the protocol macro function can be used to create new protocols for commercially available measuring instruments and devices, and to create protocols by modifying one of the standard system protocols. The standard system protocols are also provided with the CX-Protocol.

For details on the use of the CX-Protocol and the protocol macro function, refer to the *CX-Protocol Operation Manual (W344)*.

5-1-2 Features

The main features of the protocol macro functions are described below. For details, refer to the *CX-Protocol Operation Manual (W344)*.

Wide Range of Communications Protocols

Communications are possible with virtually any general-purpose external device, provided it has an RS-232C or RS-422A/485 port, supports half-duplex communications, and supports start-stop synchronization.

Customized Send and Receive Frames

Send frames (command + data and other send frames) and receive frames (response and other frames) can be created and registered according to the communications frame specifications of the external device.

Communications-related Functions

Error check code calculations, frame length calculations during sending, and ASCII⇔Hexadecimal conversion of numeric data are supported.

Send/Receive Monitoring

Receive wait monitoring, receive completion monitoring, and send completion monitoring are supported. If monitoring times are exceeded, either send/receive processing can be terminated or retry processing can be performed.

Retry Processing

Send/receive retry processing can be automatically executed when an error occurs, simply by setting the number of retries.

PC Read/Write Variables in Send Frames and Receive Frames

Variables for reading PC memory can be included in the send frames. These can be used as destination addresses or data when reading PC data. Variables for writing to PC memory can be also included in the actual receive frames. These can be used to write the contents of destination addresses or data to the PC during reception.

Switch 1:N Communications or the Data Write Destinations Using Repeat Processing

Repeat processing (repeat counters) for send/receive processing can be specified in communications sequences. This enables the same data to be sent by switching destination addresses during communications 1:N (N = 32 max. due to restrictions in the physical layer) or by switching the PC memory write destination addresses during data reception.

PC Interrupts During Data Reception

An interrupt can be created in the PC's CPU Unit during data reception, and an interrupt program can be executed in the CPU Unit.

Next Process Switching According to Receive Messages

The contents of up to 15 expected receive messages can be compared with the message actually received to determine the next process.

Protocol Macro Function Specifications

Item		Description	
Number of protocols (20 max.)		Can be created and registered with the Protocol Support Tool (CX-Protocol).	
Number of sequences (1,000 max.)			
Per protocol	**Number of sequences**	60 max.	
	Number of messages	300 max.	
	Number of reception matrixes	100 max.	
Protocol data memory		Flash memory in the Serial Communications Board (Retained even when the power supply to the PC is turned OFF.)	
Sequence execution condition		Using the CPU Unit's PMCR(—) instruction (specifying the sequence number)	
Communications mode		Half-duplex	
Synchronous mode		Start-stop synchronization (asynchronous mode)	
Baud rate (See note.)		RS-232C port and RS-422A/485 ports: 1,200/2,400/4,800/9,600/19,200 bps Default setting: 9,600 bps	
Communications distance (See note.)		RS-232C port: 15 m max. RS-442A/485 port: 500 m max. (The total combined cable length is 500 m max. T-branch lines must be a maximum of 10 m long.)	
Connection configuration		RS-232C port: 1:1 (1:N (N = 32 Units max.) is possible using a Converting Link Adapter.) RS-422A/485 port: 1:N (N = 32 Units max.)	
Number of connected Units		32 Units max. (unit numbers 0 to 31; unit number 0 is set for 1:1 connection)	
Maximum number of data exchange words between PC and protocol macro function	**Operand setting**	127 words	Including the word that specifies the number of words (1 word)
	Link word setting	128 words	O1, O2, I1, and I2: 128 words total
	Direct setting	128 words	Maximum number of words per data attribute

Item		Description	
Sequence contents (step common parameters)	**Number of steps per sequence**	16 max.	
	Transmission control parameters	X-on/X-off flow, RTS/CTS flow, delimiter control, or contention control, and modem control can be selected.	
	Response notification method (operand)	Scan notification or interrupt notification (i.e., writing the receive data in the I/O memory area specified in the 3rd operand of the PMCR(—) instruction) can be selected. Scan notification: Writes the receive data to I/O memory during CPU Unit scanning. Interrupt notification: Writes the receive data to I/O memory as soon as it is received, and at the same time specifies the execution of the interrupt program for the CPU Unit.	
		Scan method (fixed)	Yes
		Interrupt notification	Yes
		Interrupt notification for reception case number	Yes
	Monitoring time during send/ receive processing	Receive wait, receive completion, or send completion can be monitored. Setting range: 0.01 to 0.99 s, 0.1 to 9.9 s, 1 to 99 s, or 1 to 99 min	
	Link word setting	Area in which data is exchanged between the CPU Unit and the Serial Communications Board during Serial Communications Board refreshing. Two areas are possible for each device: An area for storing receive data and an area for storing send data.	

Item		Description	
Step contents	**Commands**	Send only (SEND), receive only (RECEIVE), or send and receive (SEND&RECEIVE)	
	Repeat counter	1 to 255 times	
	Retry count	0 to 9 (Only when the command is SEND&RECEIVE)	
	Send wait time	0.01 to 0.99 s, 0.1 to 9.9 s, 1 to 99 s, or 1 to 99 min (Only when the command is SEND or SEND&RECEIVE)	
	With or without response write (operand)	When receive processing is completed (when the receive data is stored in the area specified in the 3rd operand of the PMCR(—) instruction), whether or not to store the received messages can be selected.	
	Next processing	When a step has ended normally, End (sequence completed), Next (proceed to the next step No.), Goto (go to the specified step No.), or Abort (interrupt the step and terminate that sequence) can be selected.	
	Error processing	When a step has ended abnormally, End, Next, Goto, or Abort can be selected.	
	Send message	Data sent to the specified address when the command is SEND or SEND&RECEIVE.	Consists of a header (*1), address (*2), length, data (*2), error check code (*3), and terminator (*1). For an explanation of *1, *2, and *3, see the following pages.
	Receive message	Data sent from the specified address when the command is RECEIVE or SEND&RECEIVE.	
	Reception matrix	When the command is RECEIVE or SEND&RECEIVE, sets the expected receive messages (15 max.), and switches to the next processing according to the message received.	Specifies the receive messages and the next processing for each of cases No. 00 to No. 15. Of the maximum 16 cases, one case must be set as “Other” in the receive messages (in addition to the set receive messages).

Note The baud rate and the communications distance sometimes depend on the remote device.

Item			Description				
Message contents	***1: Header and terminator data attributes**	**Constant**	ASCII data, hexadecimal data, or control code				
	***2: Data attributes of addresses and data in send/receive messages**	**Constant**	ASCII data, hexadecimal data, or control code (with an address, no control code is possible)				
		Variables	No conversion, conversion to ASCII data, or conversion to hexadecimal data (the read/write direction can be specified)				
			Designation method	(X, Y) X: Effective address (where read from, or where written to) Y: Data size (1 to 256) **Note** The data size is the number of bytes on the transmission path.			
			X	Word designation	Word read (I/O memory to send data)	Specify using the 2nd operand of the PMCR(—) instruction.	Set leading address + n (The linear expression aN + b, including repeat counter N, is also possible for n.)
						Specify using a link word.	
						I/O memory direct designation	
					Word write (receive data to I/O memory)	Specify using the 3rd operand of the PMCR(—) instruction.	
						Specify using a link word.	
						I/O memory direct designation	
				Wild card	*	Any data or address can be received (only in receive messages)	
				Repeat counter	N		
			Y	Linear expression including repeat counter	aN + b	a: 0 to 255; b: 1 to 255 N: Repeat counter value	
				Wild card	*	Can be received regardless of the length (only in receive messages)	
				Word designation	Word read (I/O memory to send data)	Specify using the 2nd operand of the PMCR(—) instruction.	Set leading address + n (The linear expression aN + b, including repeat counter N, is also possible for n.)
						Specify using a link word.	
						I/O memory direct designation	

Item		Description
Message contents (continued)	***3: Error check codes**	LRC, LRC2, CRC-CCITT, CRC-16, SUM, SUM1, and SUM2 can be calculated.
	Maximum length of send/receive messages	256 bytes.
	Maximum number of data attributes registered in one message	96 attributes (See note 1.)
	Maximum number of write data attributes registered in one message	30 attributes (See note 2.)
Trace function		A total of up to 1,700 bytes (characters) of time-series data can be traced in send and receive messages. Changes to the step No. and control signals such as RTS and CTS can also be traced.

Note 1. The CX-Protocol can be used to register up to 96 attributes per message.

2. A macro syntax error will occur when the protocol macro is executed if more than 31 write attributes are registered in one message.

5-1-3 Using the Protocol Macro Function

The following three methods are available for using the protocol macro function.

Using the Standard System Protocols

When connecting OMRON devices, data is sent and received between the CQM1H-series CPU Unit and these devices by specifying the sequence number of the standard system protocol provided in the Serial Communications Board and CX-Protocol, and executing the sequence using the PROTOCOL MACRO instruction (PMCR(—)). The CX-Protocol is not required to use the standard system protocols.

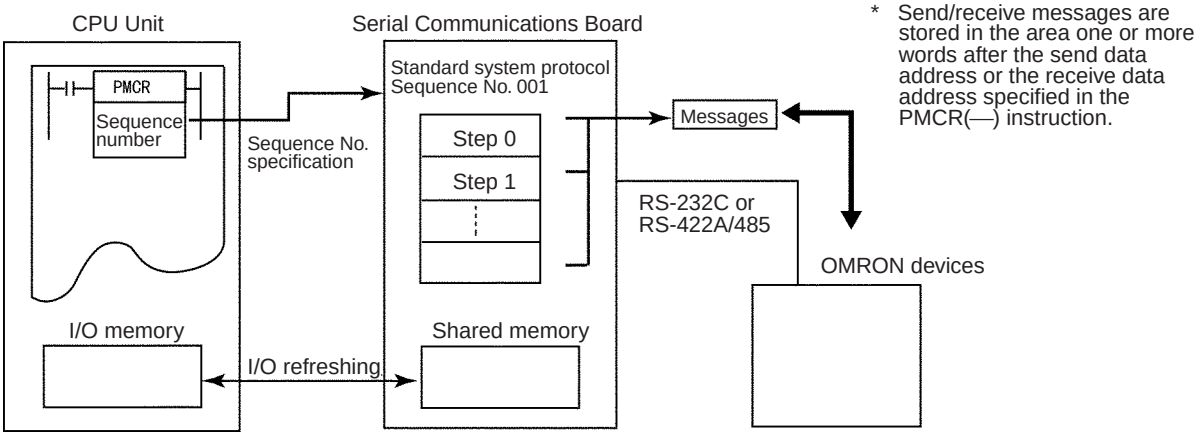

Note The devices for which standard system protocols are provided are listed below. For details, refer to *5-7 Using Protocol Macros*.

Digital Controllers (E5□K, ES100□), Temperature Controllers (E5ZE, E5□J), Intelligent Signal Processors (K3T□), Bar Code Readers (V500/V520), Laser Micrometers (3Z4L), Visual Inspection Units (F200/F300/F350), ID Controllers (V600/V620), Hayes Modem AT Command, and devices supporting the CompoWay/F protocol.

Modifying Standard System Protocols

If there is no standard system protocol for the required OMRON product or you wish to modify part of the protocol, you can use the CX-Protocol to modify a standard system protocol, transfer this as a separate communications sequence to the Serial Communications Board, and execute the PMCR(—) instruction.

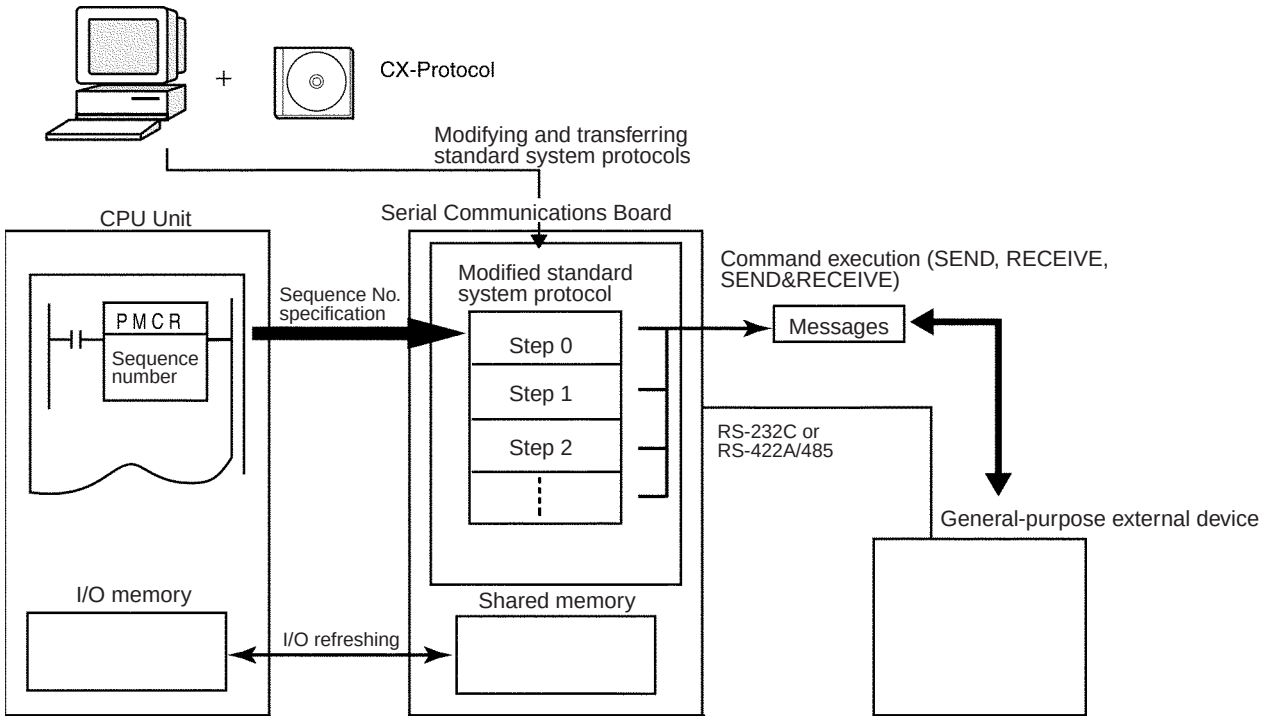

Creating a New Protocol

When connecting a general-purpose external device that has an RS-232C or RS-422A/485 port, use the CX-Protocol to create a new protocol containing the communications specifications for the general-purpose external device, transfer these specifications to the Serial Communications Board, and execute the PMCR(—) instruction.

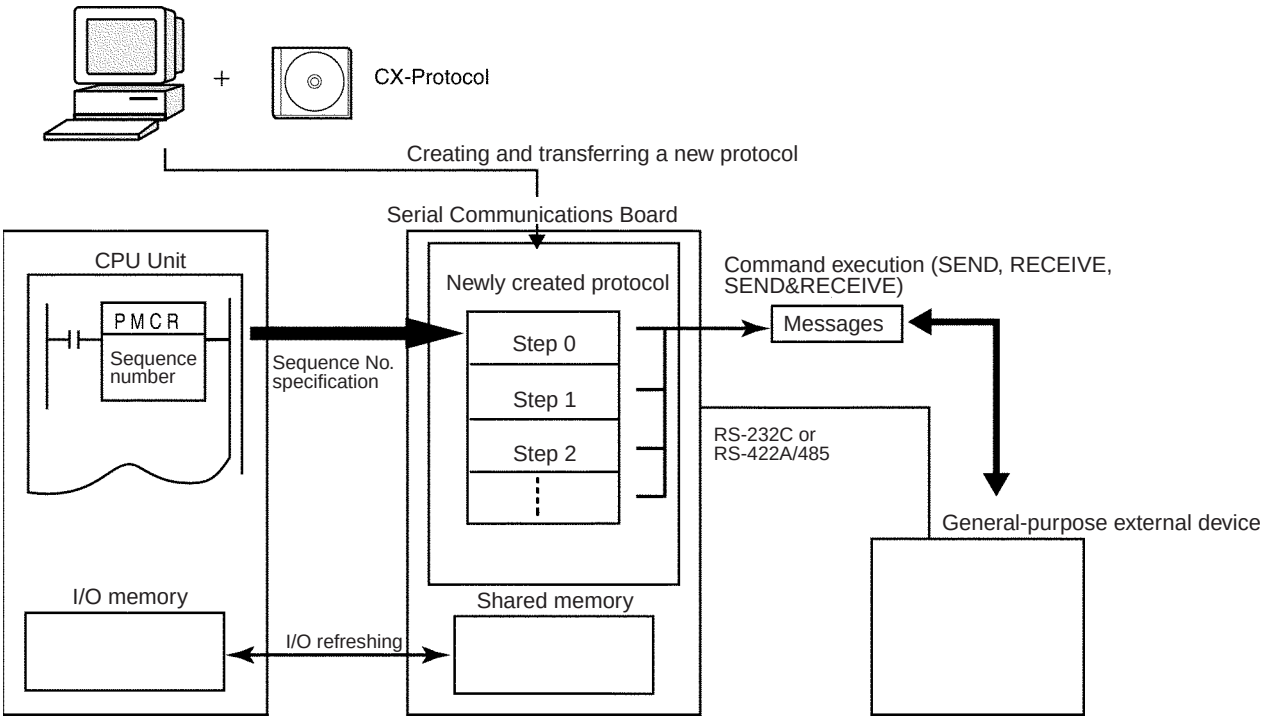

In this manual, the protocol structure is explained in simple terms, and examples are given of the use of the PMCR(—) instruction when controlling OMRON devices using standard system protocols. For details on the protocols, the method of modifying the standard system protocols, and the method of creating new sequences, refer to the *CX-Protocol Operation Manual (W344)*.

5-1-4 Storage Memory

The protocol macros are stored in flash memory in the Serial Communications Board and will be saved even if power to the CQM1H is turned OFF. The PC Setup settings for the Serial Communications Board are stored in memory in the CPU Unit with a battery backup.

5-2 Restrictions in Using the CX-Protocol

There are some restrictions in using the CX-Protocol to manipulate protocols or perform other operations for the CQM1H-series Serial Communications Board. These restrictions are described below.

- Pin 8 on the DIP switch on the front of the CQM1H-series CPU Unit must be turned ON to use the CX-Protocol. While pin 8 is ON, you will not be able to use any of the CPU Unit or Board ports for the CX-Programmer, SYSMAC-CPT, or SYSMAC Support Software.
- The model of PC must be set to the C200HG and the model of CPU Unit must be set to the CPU43.
- Refer to the following table for details and for other restrictions. Unless specified, the functionality of the CX-Protocol will be the same as for the C200HX/HG/HE.

Item	Restriction	Procedure
CQM1H DIP switch settings	Turn ON pin 8 on the DIP switch on the front of the CQM1H-series CPU Unit before attempting to use the CX-Protocol. You will not be able to use the CX-Protocol while pin 8 is OFF. While pin 8 is ON, you will not be able to use any of the CPU Unit or Board ports for the CX-Programmer, SYSMAC-CPT, or SYSMAC Support Software. Always turn OFF pin 8 after you are finished using the CX-Protocol.	Turn ON pin 8 before using the CX-Protocol. Turn OFF pin 8 after you are finished using the CX-Protocol.
PC model setting (to create new protocols)	Set the model of PC to the C200HG and the model of CPU Unit to the CPU43-E.	1. Select **New** from the File Menu. 2. Select **C200HG** from the Change PLC Dialog Box. 3. Select **CPU43-E** from the Settings Dialog Box.
Transferring protocols to the computer	You will not be able to upload the data for the standard system protocols from the Board to the computer. If an attempt is made, the transfer will be canceled and the following message will appear. (The standard system protocol data in the Board will not be affected.) Decompiler has detected an error. No protocol data or invalid protocol list on upload. It is likely that the previous download was interrupted or the PMSU memory has been cleared/damaged. Try to download a valid protocol and retry upload. You will be able to download protocol data from the computer to the Board (including data for the standard system protocols) and will then be able to upload the data. To modify the standard system protocols for your applications, modify the data provided with the CX-Protocol and then download the data to the Board.	---

Item	Restriction	Procedure
Communications port settings on the Board	Use the same communications port settings for the Board as those used for the C200HX/HG/HE. The communications port names will be as follows: Communications Port A will be port 1 on the Board. Communications Port B will be port 2 on the Board.	1. Double-click the PC icon while online. 2. Double-click the Communications Port A or Communications Port B Icon in the Project Window. 3. Make the settings in the Communications Port Settings Dialog.
I/O memory operations: PLC Memory Window	Use I/O memory addresses only within the ranges supported by the CQM1H. Do not attempt to edit addresses IR 256 and higher in the IR Area (displayed without the prefix) even though these addresses will be displayed.	1. Click the PC icon and select **Memory** from the pop-up menu. The PLC Memory Window will be displayed. 2. Select the I/O memory areas and address to be displayed or edited in the Data Area Workspace.
	The following restrictions apply when transferring I/O memory. When transferring from the computer to the PC, do not select **All**. Use **Selection** or **Range** and specify a range that lies between IR 000 and IR 255. When transferring from the PC to the computer, do not select **All**. Use **Visible area only** or **Selection** and specify a range that lies between IR 000 and IR 255.	1. Double-click the memory area in the Data Area Workspace. The PLC Data Table will be displayed. 2. Specify the range of addresses to be transferred if necessary. 3. Select **Transfer to PLC via Online** or **Transfer from PLC via Online** from the Online Menu.
Error log	The error log cannot be used. If it is displayed, the contents will not agree with the error log in the CQM1H.	---
I/O tables	The I/O tables are not necessary for the CQM1H and will be disabled. If an attempt is made to create I/O tables, the following message will be displayed and the I/O tables will not be created. ! The PLC does not contain an IO Table.	---

5-3 Application Procedure

1,2,3...

1. Turn OFF the power to the PC.
2. Install the Board.
3. Connect the system.

   Connect the external devices using RS-232C or RS-422 cable. The settings of the TERM and WIRE switches on the front panel of the Board will need to be changed if the RS-422A/485 port on the Serial Communications Board is used.

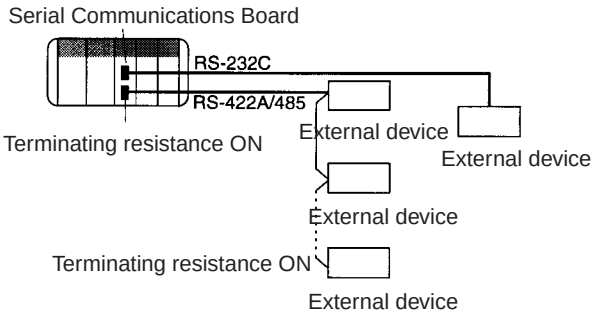

   Connect a Programming Console, the CX-Programmer, or the CX-Protocol to the CPU Unit as required.
4. Turn ON power to the PC.
5. Set the PC Setup settings for the Serial Communications Board.

   Use the Programming Console, CX-Programmer, or CX-Protocol to set the settings in DM 6550 to DM 6559.

Note The PC Setup settings for the Serial Communications Board are read constantly during PC operation. It is not necessary to restart the PC after changing these settings.

The default settings are shown in the following table. These are the standard settings for protocol macros.

Port 1	Port 2	Bit(s)	Setting	Function
DM 6555	DM 6550	00 to 03	0 Hex	Standard port settings (1 start bit, 7-bit data, even parity, 2 stop bits, 9,600 bps)
		04 to 07	---	Not used.
		08 to 11	---	Not used.
		12 to 15	6 Hex	Communications mode: Protocol macro
DM 6556	DM 6551	00 to 07	---	Baud rate setting disabled.
		08 to 15	---	Frame format setting disabled.
DM 6557	DM 6552	00 to 15	---	Not used.
DM 6558	DM 6553	00 to 15	---	Not used.
DM 6559	DM 6554	00 to 15	---	Not used.

6. Run the system as described below in *Using Standard System Protocols* or in *Using User-created Protocols*.

Using Standard System Protocols

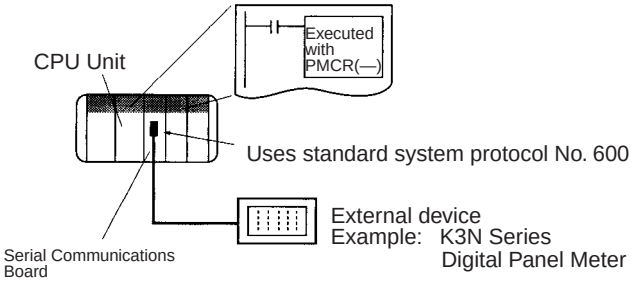

1,2,3... 1. Setting the Send Data
Refer to information on the 2nd operand of PMCR(—) in *Appendix B CompoWay/F Master Protocol* and set the number of send data words in S, and set the send data starting in S+1.

2. Coding PMCR(—)
The following example shows how to use a Serial Communications Board to read the present value for a K3N-series Digital Panel Meter using the CompoWay/F Master standard system protocol sequence No. 600: Send/Receive with ASCII Conversion and Response.

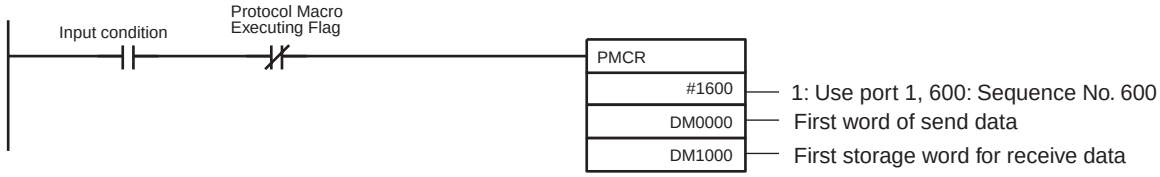

If the input condition turns ON when the Protocol Macro Executing Flag (IR 20708 for Port 1) is OFF, communications sequence No. 600 of the standard system protocol in the Serial Communications Board is called, and data is sent and received via port 1 of the Serial Communications Board.

Send Data

S:D00000	0007	7 words from D00000 to D00006
D00001	0000	K3N node No. : 00
D00002	0101	CompoWay/F command "0101" (reads the K3N present value)
D00003	000C	Number of send bytes
D00004	C000	CompoWay/F command send data (Variable type, read start address, 00, number of elements)
D00005	0000	
D00006	0001	

Receive Data

D:D00010	0004	4 words from D00010 to D00013
D00011		Response code is stored.
D00012		The read data (in this case, the present value of K3N) is stored.
D00013		

3. Executing the PMCR(—) instruction
4. For details on confirming operation, see *Section 12 Tracing and I/O Memory Monitoring* in the *CX-Protocol Operation Manual (W344)*.
   - Transmission Line Tracing
     The data in the send/receive messages flowing over the transmission line (RS-232C or RS-422A/485) and the control codes are traced.
   - I/O Memory Monitoring
     Monitors send/receive data and the status of the various flags.

Using User-created Protocols

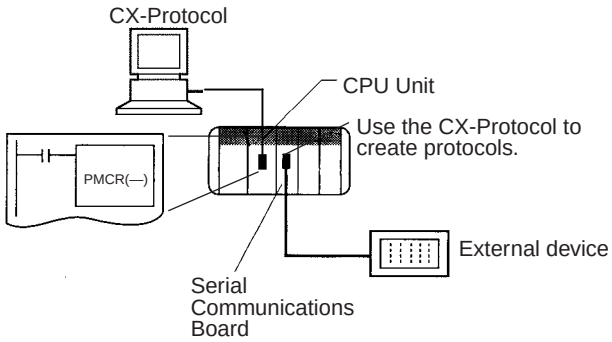

Section references in the following procedure refer to the *CX-Protocol Operation Manual (W344)*.

1,2,3...

1. For details on designing protocols, see Section 4 and Section 5.
   a) Create a communications sequence status transition chart.
   b) From the status transition chart, divide the processing contents into sequence steps.
   c) Determine the send/receive message contents.
2. Use the CX-Protocol to create and send a project (protocol data).
   a) Creating a new project:
   See *5.1 Creating a New Project or Protocol*.
   b) Creating a new communications sequence:
   See *5.2 Creating a New Sequence* or *7.1 Setting a Sequence*.
   c) Creating steps:
   See *5.2 Creating a New Sequence* and *8.1 Setting a Step*.
   d) Creating messages:
   See *9.1 Setting a Message*.

   Note After creating messages, steps can also be created by specifying message names.

e) Transferring the created project to the Board:
See *11.1 Transferring and Reading Protocol Data between Personal Computers and Serial Communications Boards*.

3. Create the ladder program.

a) Setting Send Data

- Specifying Operands
Set the send data in the I/O memory after the S+1 operand of the PMCR(—) instruction. Set the number of send data words (including S itself) in S.
- Direct Designations
Set the send data in the I/O memory specified by the read variables in the send message.
- Specifying Link Words
Set the send data in the O1 or O2 area of the Link Word Area.

b) Coding PMCR(—)

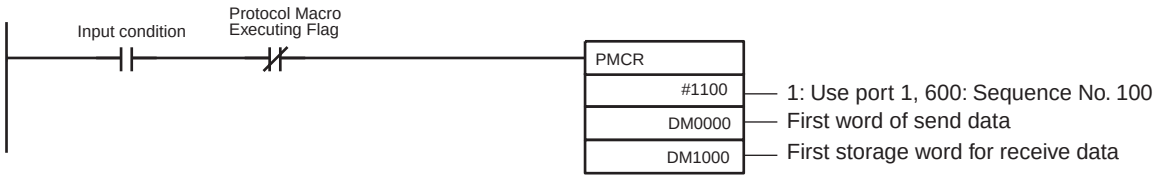

If the input condition turns ON when the Protocol Macro Executing Flag (IR 20708 for port 1) is OFF, communications sequence No. 100 registered in the Serial Communications Board is called, and data is sent and received via port 1 of the Serial Communications Board.

The amount of send data depends on the number of words specified in DM 0000 (the number of words after DM 0001 plus 1 for DM 0000 itself), and is sent from the next word after DM 0001.

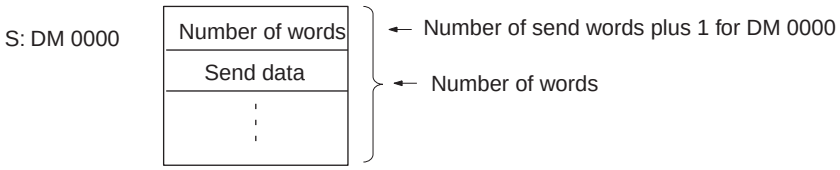

The receive data is stored in consecutive words beginning with DM 1000, and the number of words actually stored in DM 1000 (the number of words after DM 1001 plus 1 for DM 1000 itself) is stored.

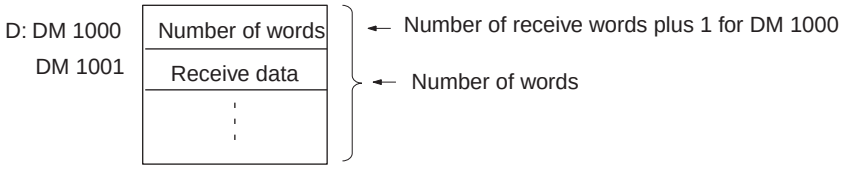

c) Execute PMCR(—)

4. For details on the confirming operation, see *Section 12 Tracing and Monitoring*.

- Transmission Line Tracing
The data in the send/receive messages flowing over the transmission line (RS-232C or RS-422A/485) and the control codes are traced.
- I/O Memory Monitoring
Monitors send/receive data and the status of the various flags.

5-4 Connections

This section describes the connections for protocol macros. Up to 32 nodes can be used for 1:N connections.

Port	Configuration	Schematic diagram
RS-232C	1:1	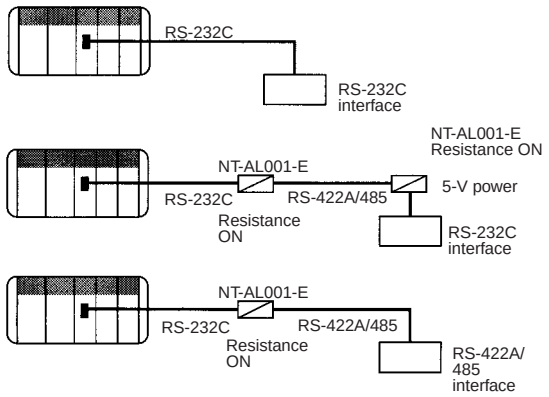
RS-232C	1:N	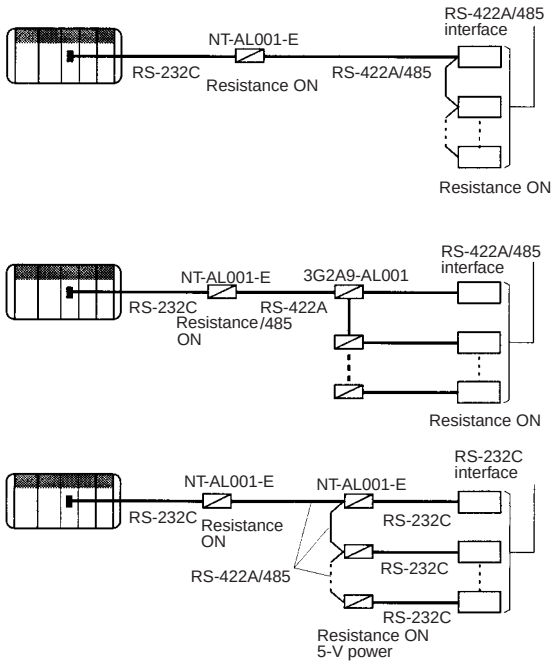
RS-422A/485	1:1	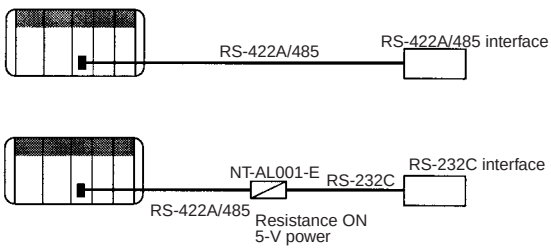

Port	Configuration	Schematic diagram
RS-422A/485	1:N	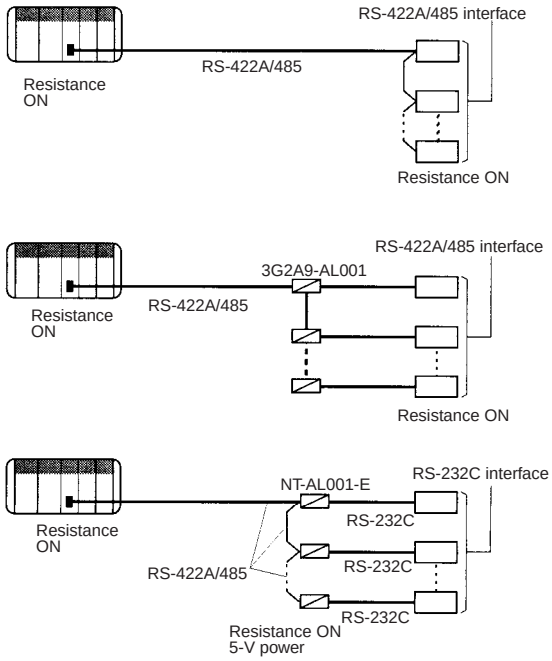

Note

1. The maximum cable length for RS-232C is 15 m.
2. The maximum combined cable length for RS-422A/485 is 500 m including branch lines.
3. The maximum cable length is limited to 2 m when an NT-AL001-E Link Adapter is connected.
4. Branch lines must be a maximum of 10 m long.
5. Up to 32 nodes can be used for 1:N connections. With a 2-wire connection, this figure includes the Communications Board itself, whereas with a 4-wire connection, it does not (i.e., up to 32 devices can be connected).

Connection Examples

The connection examples in the remainder of this section show only the basic connection diagrams. We recommend that appropriate noise countermeasures be taken in actual applications, including the use of shielded twisted-pair cables. Refer to *2-3 Wiring* for actual wiring methods.

Connecting RS-232C Ports 1:1

Connections to E5CK Controller

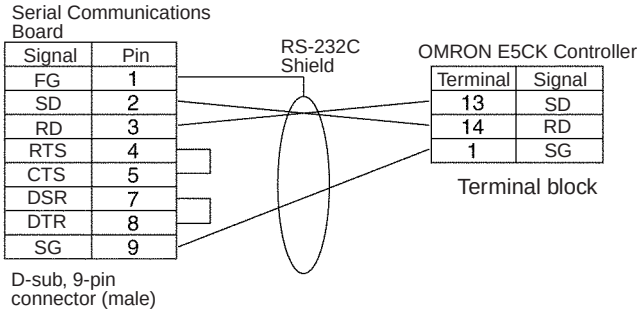

Connecting a Host Computer with NT-AL001-E Converting Link Adapters

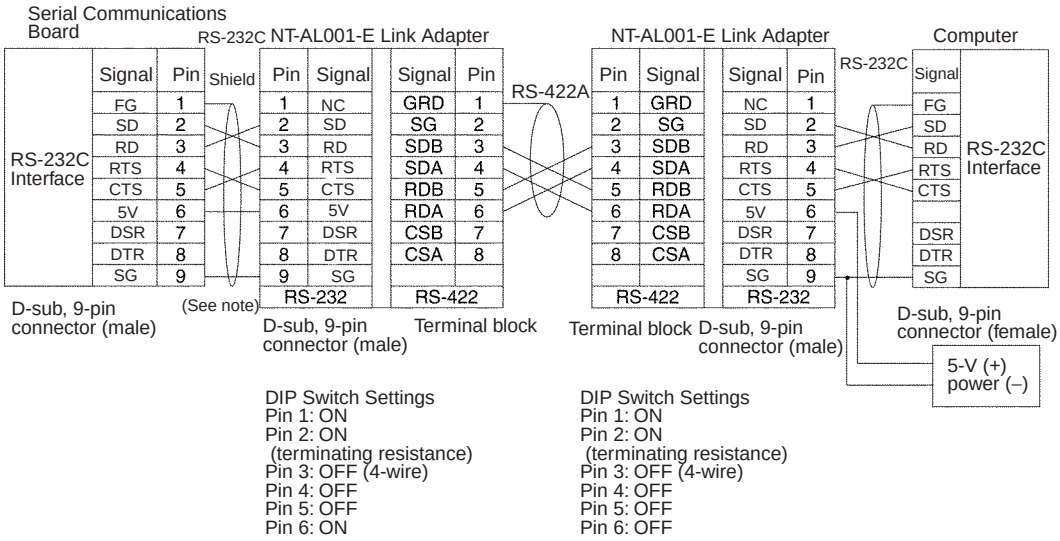

Note We recommend using the following NT-AL001-E Link Adapter Connecting Cables to connect to NT-AL001-E Link Adapters.

XW2Z-070T-1: 0.7 m
XW2Z-200T-1: 2 m

Connections to a Modem

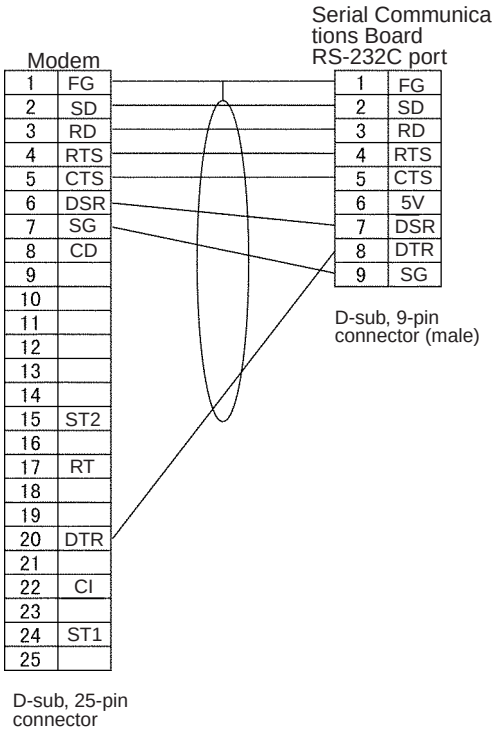

1:N Connections Using RS232C Ports

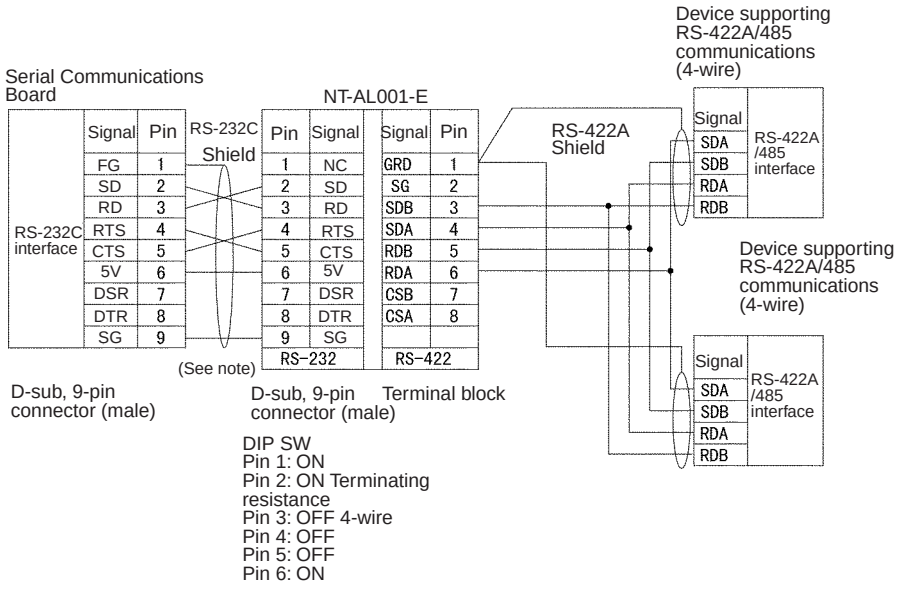

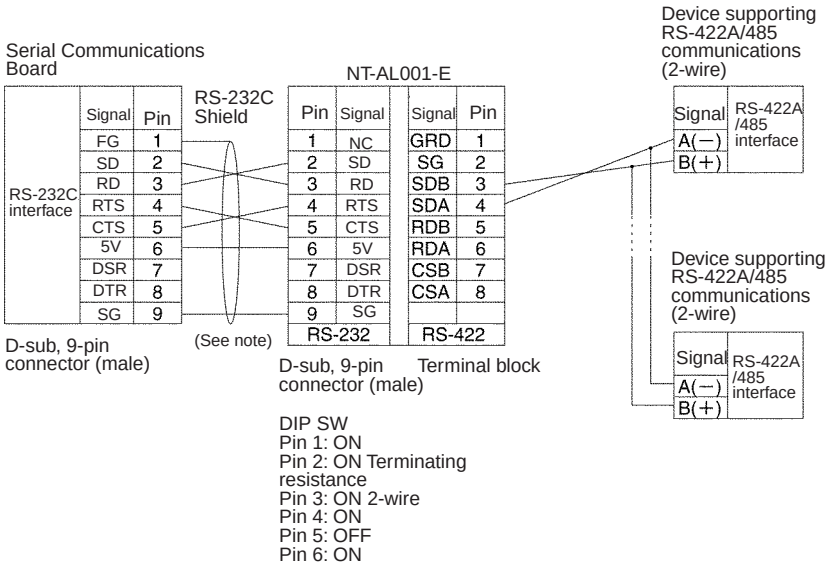

Note We recommend using the following NT-AL001-E Link Adapter Connecting Cables to connect to NT-AL001-E Link Adapters.

XW2Z-070T-1: 0.7 m

XW2Z-200T-1: 2 m

1:1 Connections Using RS422A/485 Ports

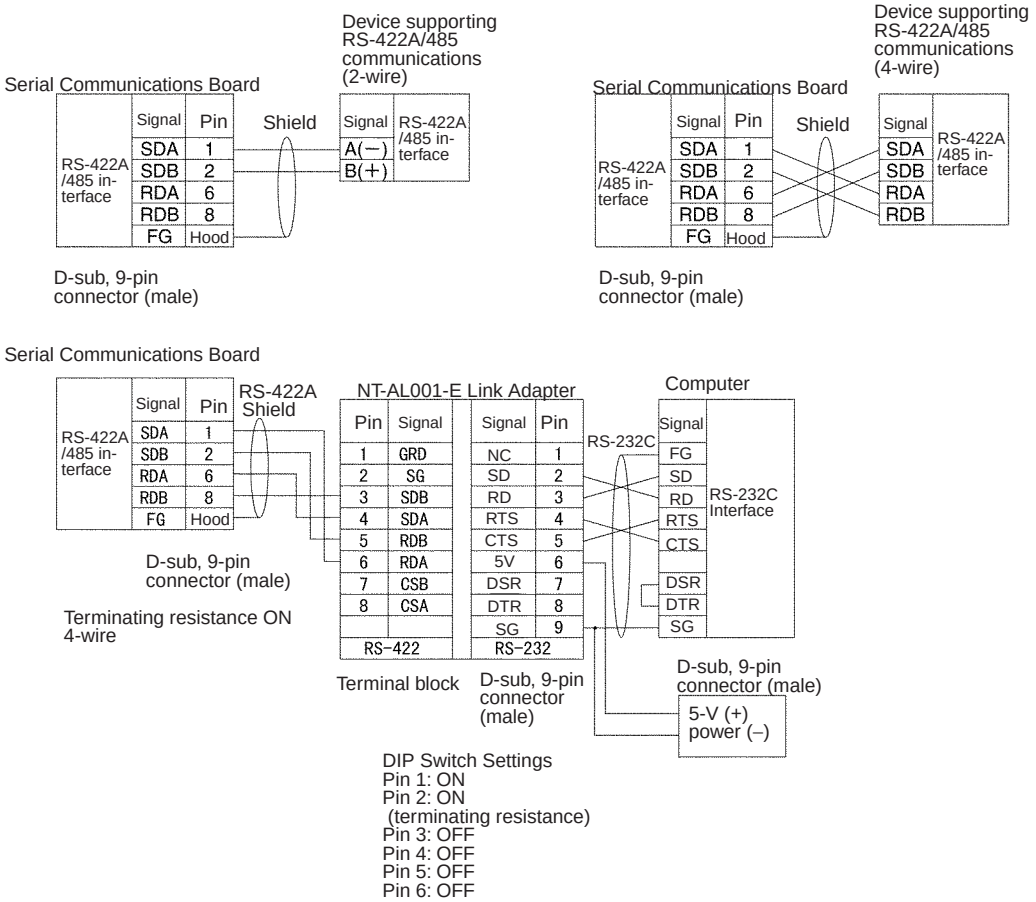

1:N Connections Using RS422A/485 Ports

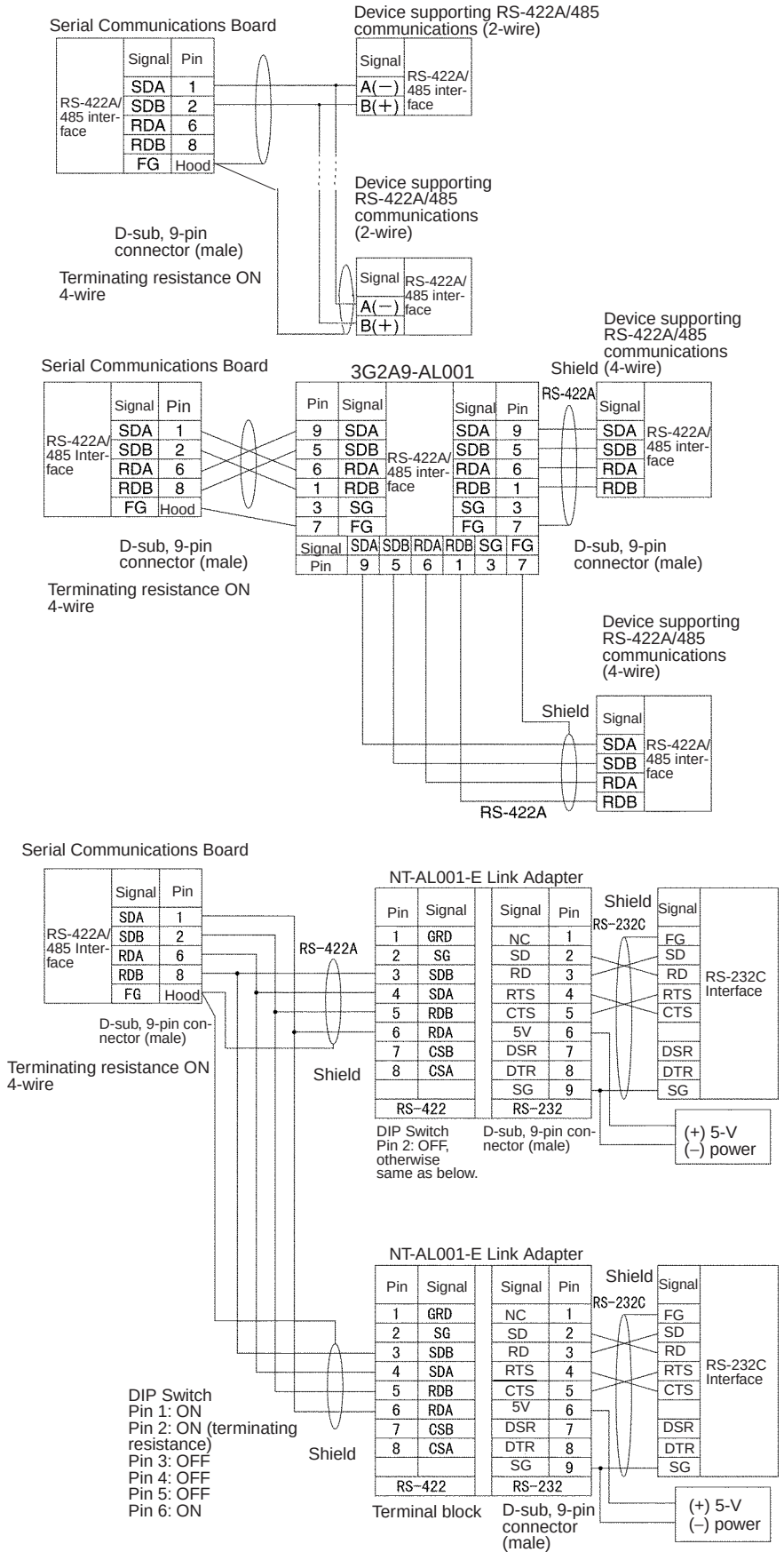

5-5 Protocol Structure

Protocols consist of communications sequences. A sequence consists of steps. These steps can be repeated, or they can be branched or ended depending on the responses received. A step consists of a command, send/receive messages, processing results, and the next process (which depends on the processing results).

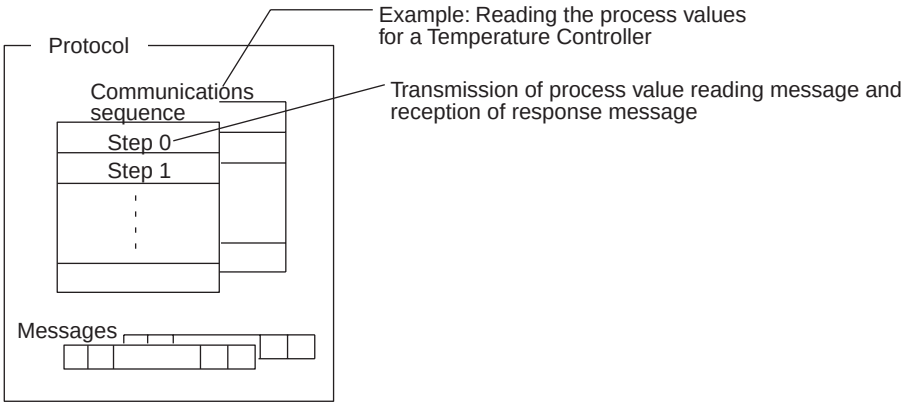

A protocol consists of processing sequences (such as reading the process value for a Temperature Controller) for a general-purpose external device. A sequence consists of a group of steps, each of which consists of a send/receive/control command, send/receive message, processing result, and a next step that depends on the processing results.

For example, with a sequence that reads the process value for a Temperature Controller, the sequence sends the send message for the connected Temperature Controller (a character string in which the Process Value Read command is inserted between the header + address and the check code + terminator) and receives the receive message (a character string in which the Process Value Read command response is inserted between the header + address and the check code + terminator).

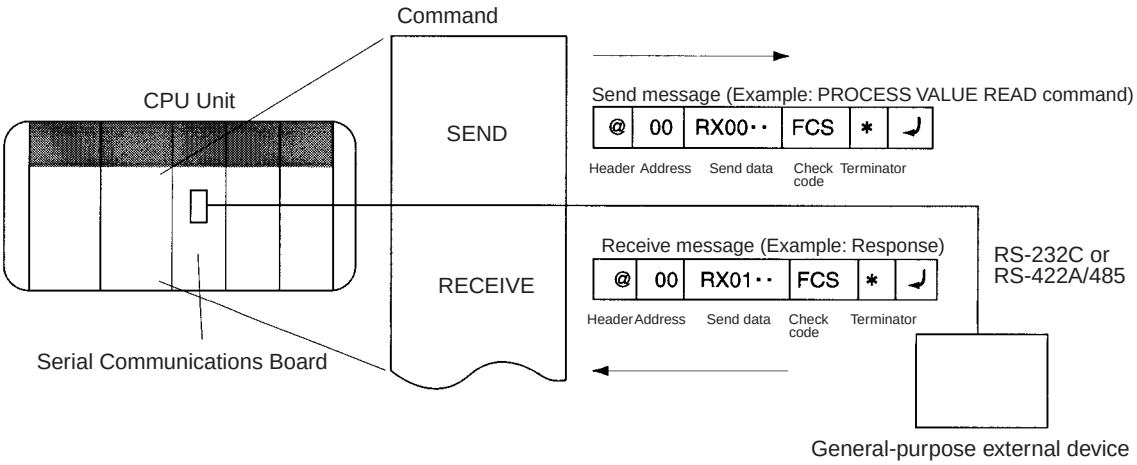

Depending on the response received, the user can either choose to resend the same send message (retry processing), or to perform the next process (for example, read the process value for a Temperature Controller with a different address).

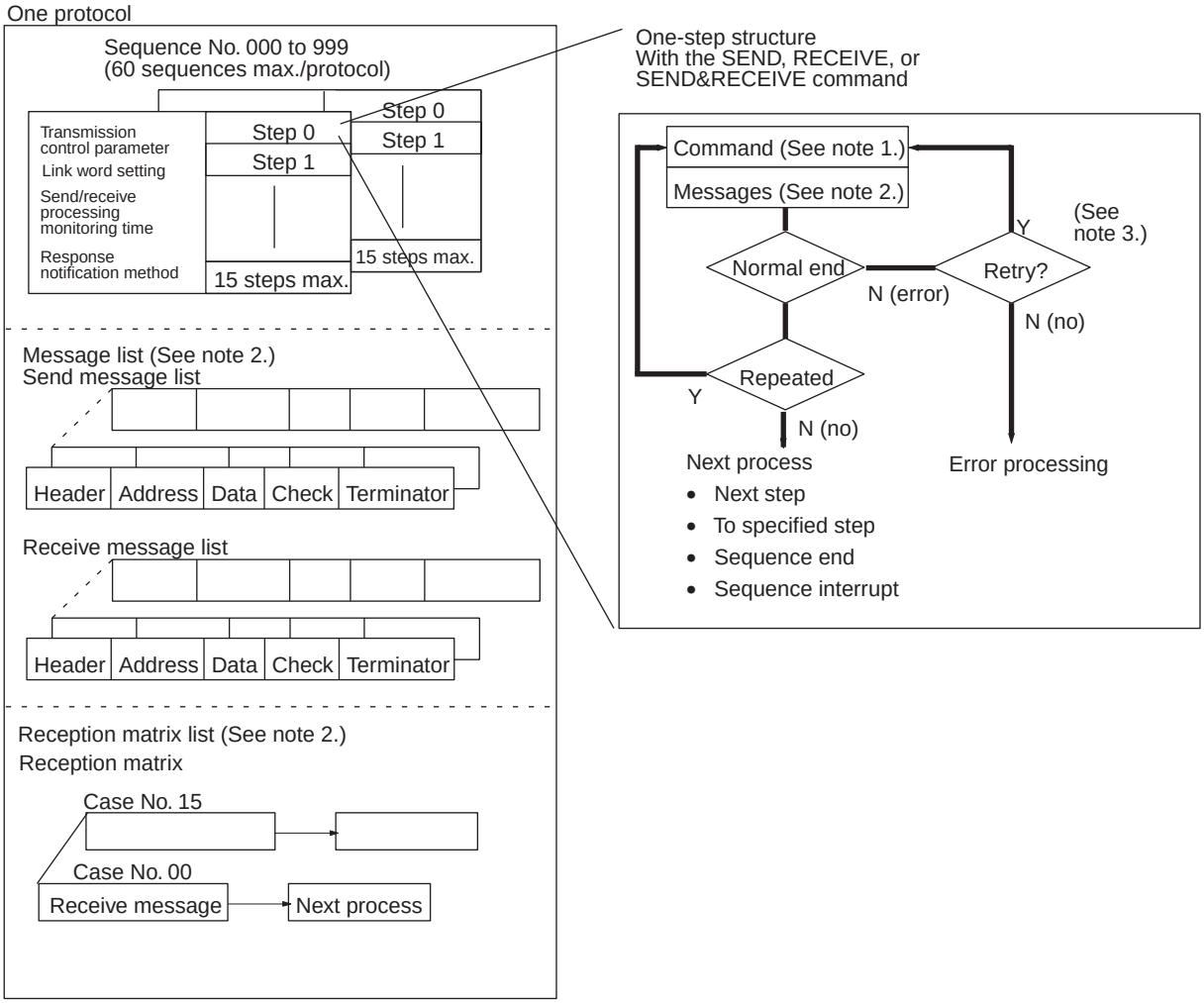

Note

1. The SEND, RECEIVE, or SEND&RECEIVE commands can be used.
2. Three types of reception matrix are available for switching the processing, depending on whether the messages are send messages, receive (wait) messages, or multiple receive (wait) messages. Unlike sequences, these matrixes are managed as lists.
3. Retries are possible on for the SEND&RECEIVE command.

Sequence Parameters

Parameter	Meaning
Transmission control parameters	Control methods, such as flow control
Link words	Settings for shared words between the PC and the Serial Communications Board.
Monitoring time	Monitoring time for send/receive processing
Response notification method	Timing for writing received data to I/O memory in the PC

Step Parameters

Parameter		Meaning
Command		One of the following: SEND, RECEIVE, or SEND&RECEIVE
Messages	Send message	The message sent for SEND.
	Receive message	The expected message for RECEIVE.
	Send message and receive message	The message sent and the expected message for SEND&RECEIVE.
	Reception matrix	A group of expected messages that can be used to switch to different next processes when RECEIVE or SEND&RECEIVE is used.
Repeat counter	The number of times to repeat the step (0 to 255). The repeat counter can be used to change send/receive messages.	
Retry count	Used for SEND&RECEIVE to retry the command for errors (0 to 9).	
Send wait time	Used for SEND or SEND&RECEIVE to create a wait time before sending data.	
Response write enable (for operand specification)	Specification of whether or not to write the received data to memory.	
Next process	Specifies the next step or to end the sequence when the current step is completed normally.	
Error processing	Specifies the next step or to end the sequence when the current step ends in an error.	

Standard System Protocol Example

Process Value Read Sequence for E5□K Controller Read Protocol

Level	Item	Setting
Sequence	Link words	---
	Transmission control parameters	Modem control
	Response notification method	Scan
	Reception wait time Tr	3 s
	Reception finished wait time Tfr	3 s
	Send finished wait time Tfs	3 s
Steps	Step number	00
	Repeat counter	Reset/001
	Command	SEND&RECEIVE
	Retry count	3
	Send wait time	---
	Send message	SD (00) _1
	Receive message	RV (00) _1
	Response write enable	Write
	Next process	End
	Error process	Abort

Level	Item	Setting
Send message SD (00) _1	Header <h>	“@”
	Terminator <t>	[2A0D]
	Error check code <c>	LRC (horizontal parity) (0) (2 bytes of ASCII)
	Length <l>	---
	Address <a>	$ (R (1)) ,2)
	Message edited	<h> + <a> + "1" + "00" + "0000" + <c> + <t> Data
Receive message RV (00) _1	Header <h>	“@”
	Terminator <t>	[2A0D]
	Error check code <c>	LRC (horizontal parity) (0) (2 bytes of ASCII)
	Length <l>	---
	Address <a>	& (R (1)) ,2)
	Message edited	<h> + <a> + "00" + "00" + & (W (1) ,4) + <c> + <t> Data

Handling Communications Problems for Standard System Protocols

The CQM1H-series PCs provide standard system protocols to enable communications with OMRON components without having to create communications sequences. The sequences in the standard system protocols can be executed merely by setting operands for the PMCR(—) instruction.

Processing for communications line problems during communications for the standard system protocols are set to normal settings, as shown in the following table. If these settings are not suitable to the application or if improvements are desired, use the CX-Protocol to modify the following settings in the required sequences. For details on the use of the CX-Protocol, refer to the *CX-Protocol Operation Manual (W344)*. Refer to the appendices for the settings in the standard system protocols.

Level	Item	Possible changes in settings
Sequence parameters	Link words	No reason to change.
	Transmission control parameters	
	Response notification method	
	Reception wait time Tr	The monitoring times are set to 3 seconds for most sequences. The settings are different for send-only and receive-only sequences, as well as for sequences that require time for responses.
	Reception finished wait time Tfr	
	Send finished wait time Tfs	
Step parameters	Repeat counter	No reason to change.
	Command	
	Retry count	The retry count is general set to 3 retries (4 tries total) for sequences that use the SEND&RECEIVE command. Different settings are used for sequences that have other commands.
	Send wait time	No reason to change.
	Send message	
	Receive message	
	Response write enable	
	Next process	
	Error process	

5-6 Control Bits, Flags, and Status Information

Control bits, flags, and status information for the Serial Communications Board are available in the Inner Board Slot 1 area. The addresses in this area are as follows:

Inner Board Slot 1 Area: IR 200 to IR 207

All of the bits in the following table are initialized (cleared) when power to the PC is turned ON, when the mode is changed between PROGRAM and RUN/MONITOR mode, when the STUP(—) instruction is executed to change the serial communications mode, or when the communications port is restarted. The bits are also reset at the timing indicated in the *Reset* column in the table.

Word	Bits	Name and Function	Classification	Set	Reset
IR 200	00	**Serial Communications Board Hardware Error Flag** Turns ON if an error occurs in the Board. Replace the Board if this flag will not turn OFF even after remounting the Board securely or mounting it in a different CPU Unit.	System error	When error occurs	Power ON
	01	**Board Identification Error Flag** (hardware error) Replace the Board if this flag turns ON.			
	02	**Protocol Data Error Flag** This flag turns ON if an error is detected in the protocol data checksum when the power is turned ON. The ERR indicator on the CPU Unit will also flash and the RDY indicator will flash. This error may occur if the communications connector becomes disconnected or the PC power is turned OFF during protocol data transfer. Use the CX-Protocol to transfer of the protocol data again.			Normal completion of protocol data transfer
	11	**Port 2 Protocol Macro Execution Error Flag** The flag turns ON when the protocol macros are not supported (error code 1), there is a sequence number error (error code 2), an attempt was made to write data receive data at an illegal address (error code 3), or a protocol data syntax error occurred (error code 4).			Start of sequence
	12	**Port 1 Protocol Macro Execution Error Flag** Same as IR 20011.			
	13 14 15	**PC Setup Error Flags** Bit 15 turns ON if a Setup error occurs in the PC Setup settings for the Board. Bit 14 will turn ON if the error is for port 1. Bit 13 will turn ON if the error is for port 2. Correct the PC Setup. The defaults will be used for the settings causing th error.			Power ON

Word	Bits	Name and Function	Classification	Set	Reset
IR 201	00 to 03	**Port 1 Error Code** (Transmission Error Status) When an error occurs during transmissions for a protocol macro, an error code will be output to these bits. 0: Normal operation1: Parity error2: Framing error Error codes 3 to 7 are not possible for protocol macros. These error codes are the same regardless of the serial communications mode. IR 20104 will also turn ON except when the error code contains all zeros. SEND&RECEIVE retry processing will be performed for any error. If communications are recovered through protocol macro retry processing, the error code will be cleared, but will be maintained even if a different error occurs during the retry.	Transmission error	When error occurs	Start of sequence
	04	**Port 1 Communications Error Flag** This flag turns ON when an error occurs in the communications path between the communications port and the external device or when communications parameters are not set correctly. The operation of this flag is the same regardless of the serial communications mode. Details on the error are output as an error code to IR 20100 to IR 20103.			
	07	**Port 1 Sequence Abort Completion Flag** This flag turns ON when a sequence has been aborted due to ABORT in the next process or in the error process. It will be OFF if an abort has not occurred.	Sequence status	When sequence is aborted	
	08 to 11	**Port 2 Error Code** (Transmission Error Status) Same as bits IR 20100 to IR 20103, but works together with IR 20112.	Transmission error	When error occurs	
	12	**Port 2 Communications Error Flag** Same as bits IR 2014, but works together with IR 20108 to IR 20111.			
	15	**Port 2 Sequence Abort Completion Flag** Save as IR 20107.	Sequence status	When sequence is aborted	
IR 202	00 to 07	**Port 1 Repeat Counter PV** (00 to FF hexadecimal) The repeat counter variable N is set. The value is cleared when the sequence execution starts. The present value N varies according to the method used to initialize the value. For resets, the variable N is set to 0 when the step is started, and the step is executed according to the set number of times. For holds, the variable N for the present value is held when the step is started, and the step is executed according to the set number of times. If the Repeat Counter Setting Value is set to read word R ( ), and 0 is read, then 0 will be stored and this step will be skipped (the next process setting will be ignored), and the sequence will move to the next step (+1). For details, refer to the *CX-Protocol Operation Manual (W344)*.	Sequence status	When repeat count is refreshed	
IR 203	00 to 07	**Port 2 Repeat Counter PV** (00 to FF hexadecimal) Same as IR 20200 to IR 20207.			

Word	Bits	Name and Function	Classification	Set	Reset
IR 204	00	**Port 1 Tracing Flag** According to instructions from the CX-Protocol, this flag is turned ON while time-series data for send and receive messages is being traced.	Tracing	Start of trace	Start of sequence or end of trace
	01	**Port 2 Tracing Flag** Same as IR 20400.			
	08 to 11	**Port 1 Protocol Macro Error Code** The list of error codes is provided at the end of this table on page page 84. If error code 1, 2, 3, or 4 is stored, the Port 1 Protocol Macro Execution Error Flag (IR 20111) will be turned ON, the ERR/ALM indicator on the CPU Unit will flash, and a non-fatal error will occur. When an error occurs, the error code is held until the next sequence starts. The error must be cleared from a Programming Console or other Programming Device after the cause of the error has been eliminated.	Protocol macro status	When error occurs	Start of sequence
	12 to 15	**Port 2 Protocol Macro Error Code** Same as IR 20408 to IR 20411, but works together with IR 20112.			
IR 205	00 to 03	**Port 1 Executed Reception Case No.** (code) Reception matrix case numbers 0 to 15 (0 to F hex) are stored for which reception has been completed. The number is cleared when the sequence execution starts. The Executed Reception Case No. is stored only when the reception matrix is set using the RECEIVE or SEND&RECEIVE command. If a reception matrix is not set, the case number will be set to 0 (cleared) when another command is executed.	Sequence status	When matrix is received	
	04 to 07	**Port 1 Completed Step Number** Step numbers 0 to 15 (0 to F hex) are stored for the steps for which execution has been completed.		When step is executed	
	15	**IR 204 Port 1 Data Stored Flag** 0: No data stored; 1: Data stored in IR 20408 to IR 20411	Protocol macro	When error occurs	
IR 206	00 to 03	**Port 2 Executed Reception Case No.** (code) Same as IR 20500 to IR 20503.	Sequence status	When matrix is received	
	04 to 07	**Port 2 Completed Step Number** Same as IR 20504 to IR 20507.		When step is executed	
IR 205	15	**IR 204 Port 2 Data Stored Flag** 0: No data stored; 1: Data stored in IR 20412 to IR 20415	Protocol macro	When error occurs	

Word	Bits	Name and Function	Classification	Set	Reset
IR 207	00	**Port 1 Restart Bit** The communications port will be restarted when this bit is turned ON by the user.	Port status	User-set or STUP(—)	After settings are changed and port restarted
	01	**Port 2 Restart Bit** Same as IR 20700.			
	02	**Port 1 Continuous Trace Start/Stop Bit** The CX-Protocol will start a continuous trace when the bit is turned ON. The trace is ended when the bit is turned OFF. The CPU Unit will manipulate the Shot Trace Bit and Continuous Trace Bit when trace operations are performed from the CX-Protocol. Do not manipulate these bits directly from a ladder diagram.	Tracing	From CX-Protocol	From CX-Protocol
	03	**Port 2 Continuous Trace Start/Stop Bit** Same as IR 20702.			
	04	**Port 1 Shot Trace Start/Stop Bit** The CX-Protocol will start a one-shot trace when the bit is turned ON. The trace is ended when the bit is turned OFF. The Serial Communications Board will be cleared when the trace buffer becomes full. The CPU Unit will manipulate the Shot Trace Bit and Continuous Trace Bit when trace operations are performed from the CX-Protocol. Do not manipulate these bits directly from a ladder diagram.			At end of short trace
	05	**Port 2 Shot Trace Start/Stop Bit** Same as IR 20704.			
	08	**Port 1 Protocol Macro Executing Flag** (instruction execution) This flag is turned ON when a PMCR(—) instruction (sequence) is executed. The flag will remain OFF if execution fails. When the sequence is completed and receive data is written, the flag is turned OFF after all the receive data has been written to I/O memory. This flag is turned OFF when the sequence is completed (either when it is ended by End, or when it is ended by Abort). When the scan response notification method is set for the sequence, first a check is made to see if the received data has been written to I/O memory before the Protocol Macro Executing Flag is turned OFF.	Protocol macro status	At instruction execution	At completion of execution
	09	**Port 1 Transfer Step Error Processing Flag** This flag is turned ON when a step has ended abnormally. It is turned OFF if the step ends normally as a result of a retry. 1: Step ended abnormally 0: Step ended normally	Step error	At compare error after reception	Start of sequence
	10	**Port 1 Sequence END Completion Flag** This flag is turned ON when a sequence is completed for the next process or for an error process with an END command. Setting END when a sequence has ended normally and setting ABORT when the sequence has ended abnormally enables this flag to be used to determine whether or not the sequence execution has ended normally. 1: Sequence ended 0: Sequence not ended	Sequence status	End of sequence	

Word	Bits	Name and Function	Classification	Set	Reset
IR 207	11	**Port 1 Forced Abort Bit** Protocol processing will be aborted when this bit is turned ON. (Processing may be completed if the bit is turned ON too late.)	Abort processing	User-set	User-set
	12	**Port 2 Protocol Macro Executing Flag** (instruction execution) Same as IR 20708.	Protocol macro status	At instruction execution	At completion of execution
	13	**Port 2 Transfer Step Error Processing Flag** Same as IR 20709.	Step error	At compare error after reception	Start of sequence
	14	**Port 2 Sequence END Completion Flag** Same as IR 20710.	Sequence status	End of sequence	
	15	**Port 2 Forced Abort Bit** Same as IR 20711.	Abort processing	User-set	User-reset

Error Codes

The contents of the error codes are shown in the following table.

Code	Error contents	Protocol macro execution
0	**No error**	Executed
2	**Sequence Number Error** The sequence number specified by the PMCR(—) instruction does not exist in the Board.	Not executed
3	**Receive Data/Write Area Exceeded Error** When data is written or read to the CPU Unit, the specified area range was exceeded.	Execution stops after the error occurs.
4	**Protocol Data Syntax Error** A code that cannot be executed occurs while the protocol macro was executed. (Example: A header occurs after a terminator.)	
5	**Protocol Macro Execution Error During Port Initialization** This error occurs when the PMCR instruction is executed while the port is being initialized (i.e., while the serial communications port is being restarted or while the serial communications mode in the PC Setup of the Serial Communications Board is being modified using the STUP instruction or the Programming Device).	Execution stops after the error occurs.

5-7 Using Protocol Macros

5-7-1 Executing Communications Sequences

Use the PMCR(—) instruction to execute communications sequences.

PMCR(—) Instruction Specifications

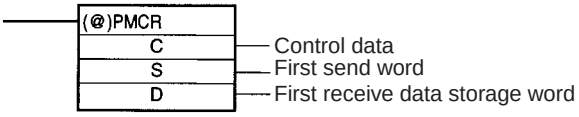

Control Data: C

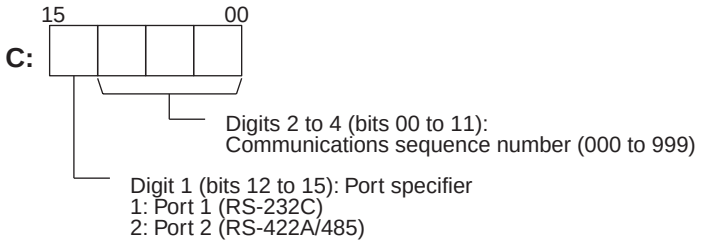

First Send Data Word: S

S specifies the first word of the words containing the data required for sending.

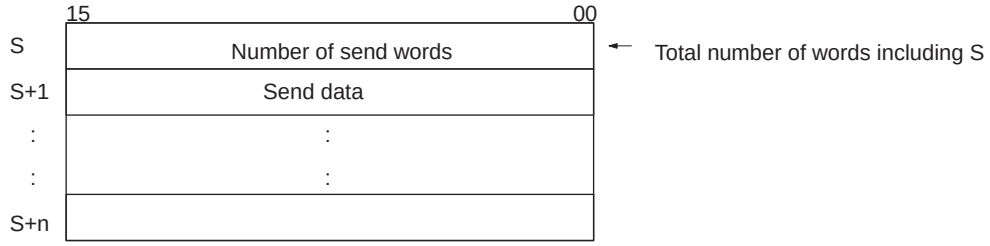

The number of send words in S+1 and the following words is stored in S. The setting range is 0001 to 0129 (4 digits BCD). S is also included in the number of words.

Note When there is no send data, set S to #0000. If any other constant or a word address is set, an error will occur, the Error Flag (SR 25503) will turn ON, and PMCR(—) will not be executed.

First Receive Data Storage Word (D)

D specifies the first word of the area used to store the receive data.

If a word address is specified for D and a response is requested, the data through the highest location received in the reception buffer will be stored in memory starting at D+1. The number of words that was stored starting at D+1 will be stored in D. D is included in the number of words.

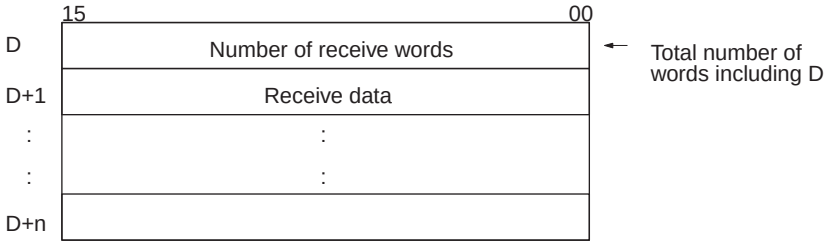

The number of words of receive data in D+1 and the following words is stored in D. The range is 0001 to 0129 (4 digits BCD). D is also included in the number of words.

Note When there is no receive data, set D to to a dummy word address. If any constant is set, an error will occur, the Error Flag (SR 25503) will turn ON, and PMCR(—) will not be executed.

PMCR(—) Operation

When PMCR(—) is executed, the communications sequence specified in bits 00 to 11 of C is executed for the port specified in bits 12 to 15 of C (port 1 or 2).

If an operand is specified as a variable in the send message, data starting in S+1 for the number of words specified in S is used as the send data. If an operand is specified as a variable in the receive message, data will be

received in words starting from D+1 and the number of words of received data will be automatically stored in D.

Flags

Name	Address	ON	OFF
Error Flag	SR 25503	Indirectly addressed DM or EM word is non-existent. (Content of ∗DM/∗EM word is not BCD, or the area boundary has been exceeded.) Another PMCR(—) instruction was already in progress when the instruction was executed (IR 20708 or IR 20712 is ON). The port specifier was not 1 or 2. **Note:** PMCR(—) will not be executed when SR 25503 is ON.	Other times.

Operand Areas and Address Ranges

Area	C	S	D
IR and SR Areas	IR 000 to IR 255		IR 000 to IR 252
HR Area	HR 00 to HR 99		
AR Area	AR 00 to AR 27		
LR Area	LR 00 to LR 63		
Timer and Counter Area	TIM/CNT000 to TIM/CNT511		
Data Memory (DM) Area	DM 0000 to DM 6655		DM 0000 to DM 6143
Extended Data Memory (EM) Area	EM 0000 to EM 6143		
Indirect DM address	*DM 0000 to *DM 6655		
Indirect EM address	*EM 0000 to *EM 6143		
Constant Area	See description of control data.	#0000 to #FFFF	---

5-7-2 Ladder Program Structure

When creating a ladder program, note the following points.

- To ensure that a PMCR(—) instruction is not executed while another PMCR(—) instruction is being executed, use the Protocol Macro Executing Flag in an NC input condition.
- Use an OFF condition for the Protocol Macro Executing Flag and perform processing to read the results of sequence execution, or perform processing when a sequence ends in an error.

Programming Example

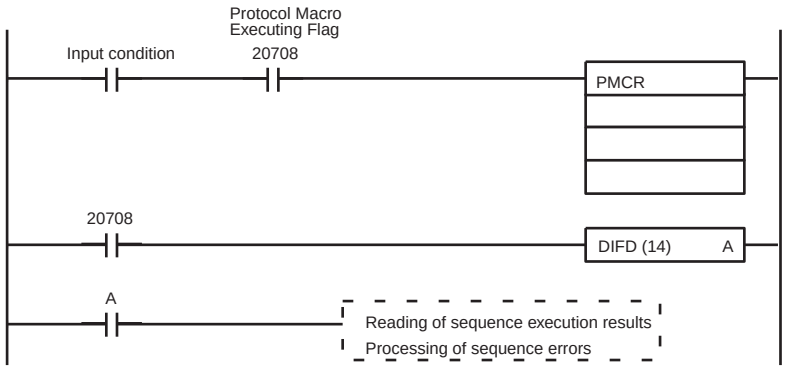

5-7-3 Ladder Program Example

The following diagram shows an example in which sequence number 000 (Present Value Read) for a Temperature Controller (E5□K Read Protocol) is executed using the protocol for an OMRON Temperature Controller connected to port 2 (RS-422A/485) of a Serial Communications Board.

Connections

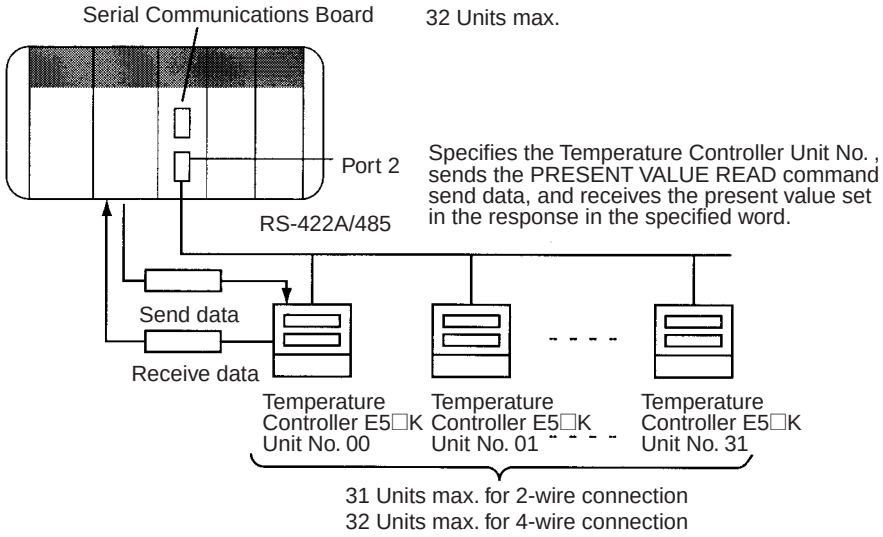

Send Word Allocation for Sequence No. 000 (Present Value Read)

First word of send data	S	Number of send data words	
	S + 1	(Undefined)	Unit No.

Word	Contents (data format)	Data
S	Number of send data words (4-digit BCD)	0002 (fixed)
S + 1	Unit No. (2-digit BCD)	00 to 31

Receive Word Allocation for Sequence No. 000 (Present Value Read)

Receive data storage words	D	Number of receive data words
	D + 1	Present value

Word	Contents (data format)	Data
D	Number of receive data words (4-digit BCD)	0002
D + 1	Present value (4-digit BCD)	Scaling Lower limit to upper limit

Operand Settings for the PMCR (—) Instruction

Reading the present value of E5□K Unit No. 03 and storing it in DM 0201

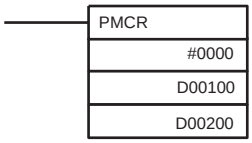

C: Control data

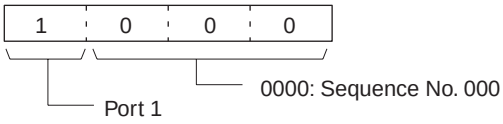

S: First send data word

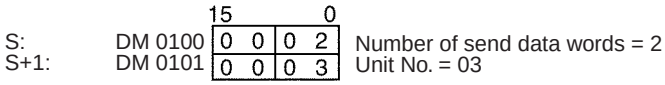

D: First receive data storage word

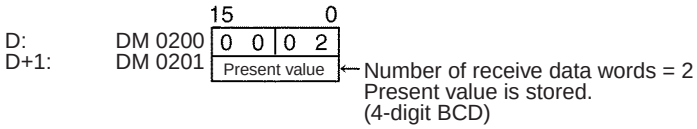

Ladder Programming Example

The following diagram shows an example in which sequence number 000 (PRESENT VALUE READ) of a Temperature Controller (E5□K Read System) is executed using the PMCR(—) instruction. If the sequence has been completed normally, the present value that has been read is transferred to another word.

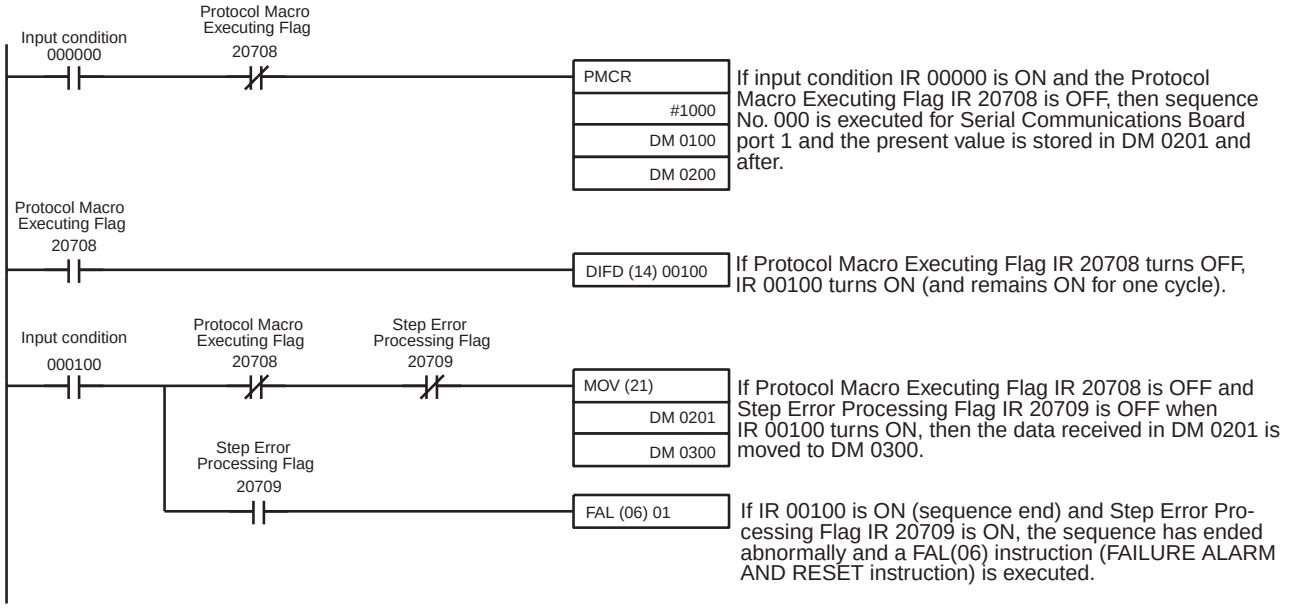

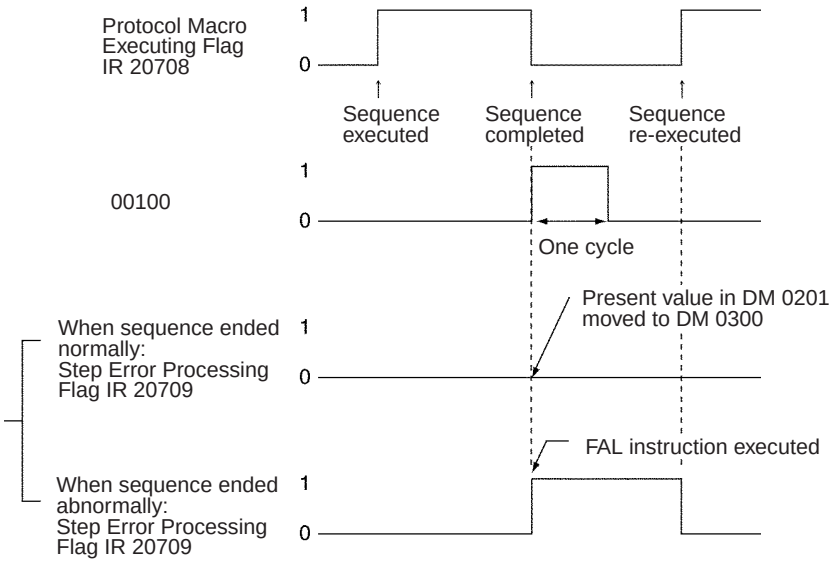

Precaution on Reception Failures for PMCR(—)

The reception buffer is cleared to all zeros just before the communications sequence is executed. If programming is included in the ladder diagram to periodically read, it should be designed to read the data only when receptions are successful, and not when the contents of the buffer has been cleared to all zeros. The above ladder programming shows one way to achieve this.

Transmission Methods

Although the following two transmission methods are commonly used, only half-duplex transmissions are supported for CQM1H protocol macros.

Half-duplex: Data can be sent only one direction at a time.

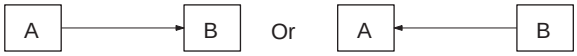

Full-duplex: Data can be sent in both directions at the same time.

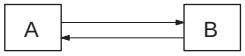

The use of half-duplex transmissions presents some restrictions. Data received from just before the SEND operation through the end of the SEND operation cannot be received as receive data for the next RECEIVE operation because the reception buffer is cleared just before a sequence is executed and at the end of the SEND operation (i.e., for the SEND and SEND&RECEIVE commands).

Transmission mode	Reception buffer cleared	Data reception	Character trace
Half-duplex	Just before sequence execution and at the end of SEND operation for SEND or SEND&RECEIVE commands	Between end of SEND operation and end of RECEIVE operation or between the end of SEND operation and just before beginning of next SEND operation	All characters while tracing is being performed

An example timing chart for the above situation is shown below.

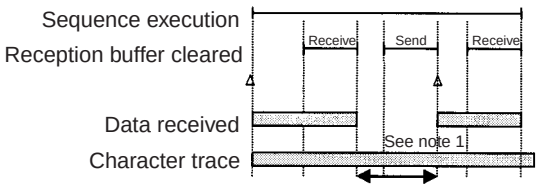

Note

1. Data received before the completion of the SEND operation will be lost, but it will be included in the character trace.
2. There is a time lag between the completion of data send processing and the end of the SEND operation. This time lag is time t1 and is shown in the following table. If the response from the external device is too quick, any receive data entering between the end of sending data for the SEND operation and the completion of the SEND operation will not be received.

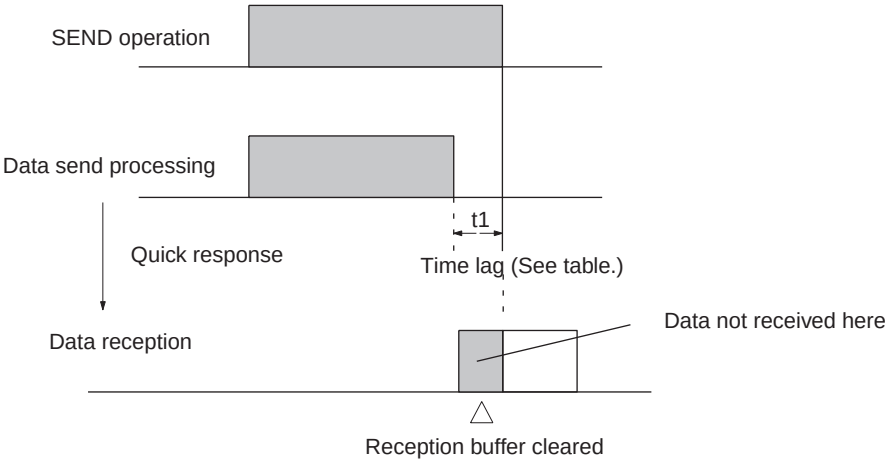

Time Lag t1

Baud rate (b/s)	Lag time (ms)
1,200	30
2,400	15
4,800	8
9,600	5
19,200	3

Note The lag time shown above is an approximate value. It may become longer depending on the protocol macro processing.

Error Flags for Overrun, Framing, and Parity Errors

When an overrun, framing, or parity error is detected during a protocol macro, the receive data will be stored in the reception buffer along with error information. The error flags will operate as described next.

Receive Data with Error Information that Matches Expected Receive Messages

The expected receive message received for the RECEIVE operation is found in the reception buffer and handled as receive data. If the receive data contains error information, the corresponding error flags are turned ON.

The following example shows reception of 100 bytes of data that matches an expected receive message.

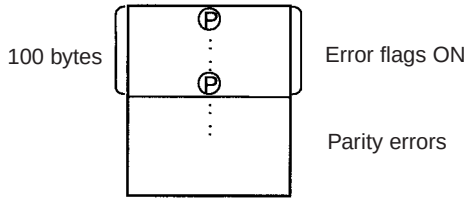

Receive Data with Error Information that Does Not Match Expected Receive Messages

If there is no expected receive message that matches the receive data, the data is discarded and the error flags are not affected. The trace information will contain any error information entering the reception buffer up to the capacity of the trace data.

The following example illustrated what happens when there is no expected receive message that matches the receive data.

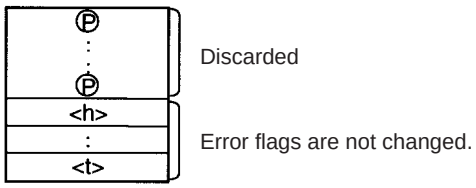

In the following ladder programming, sequence number 000 (E5□K Digital Controller Read) is executed through PMCR(—) to read the PV from the Digital Controller. When sequence execution has been completed, the PV is transferred to words to store it.

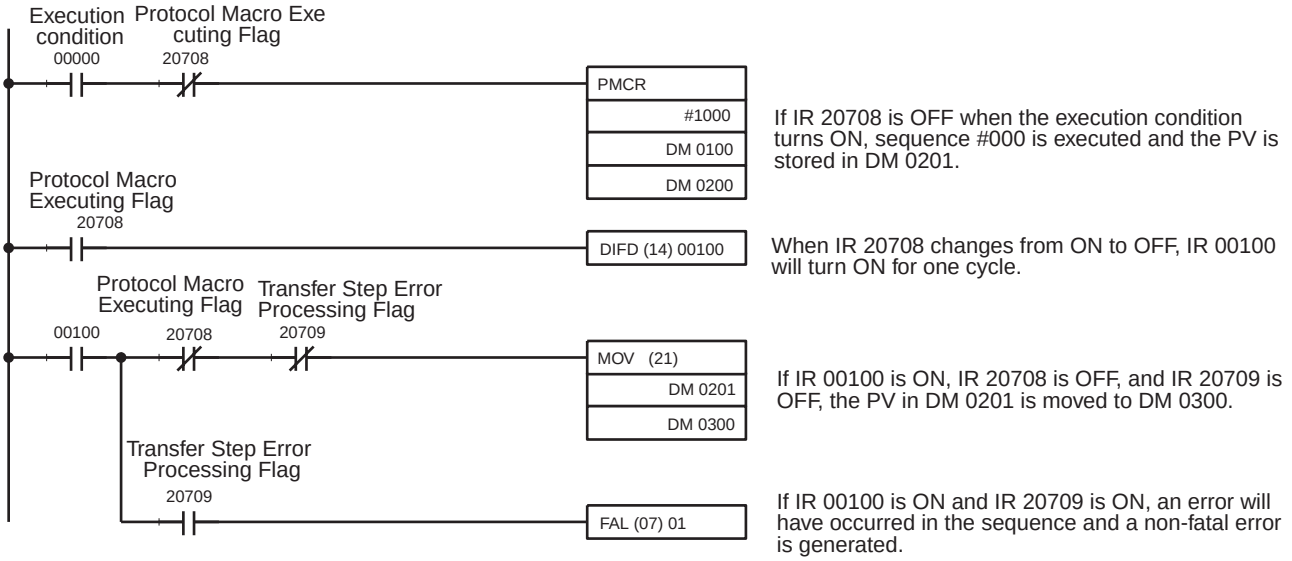

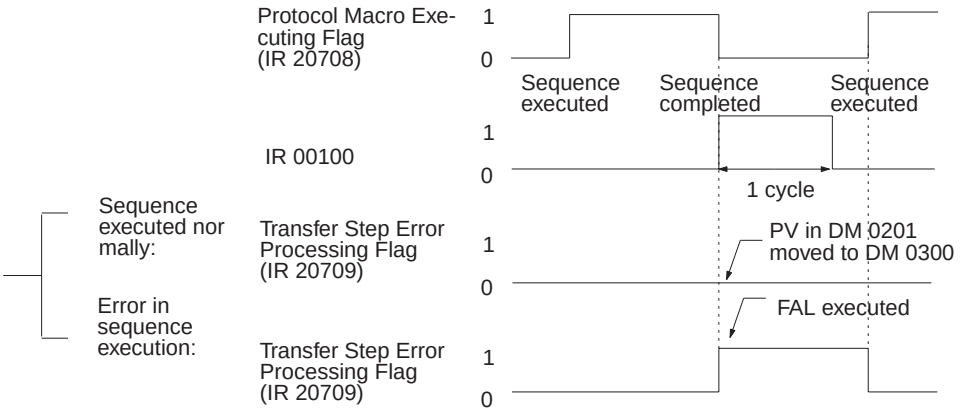

Processing When a Sequence Ends Abnormally

As shown in the following examples, if END is set when a sequence ends normally and ABORT is set when a sequence ends abnormally, it is possible to determine whether each sequence has ended normally or abnormally by using the Sequence End Completion Flag and the Sequence Abort Completion Flag.

Example 1

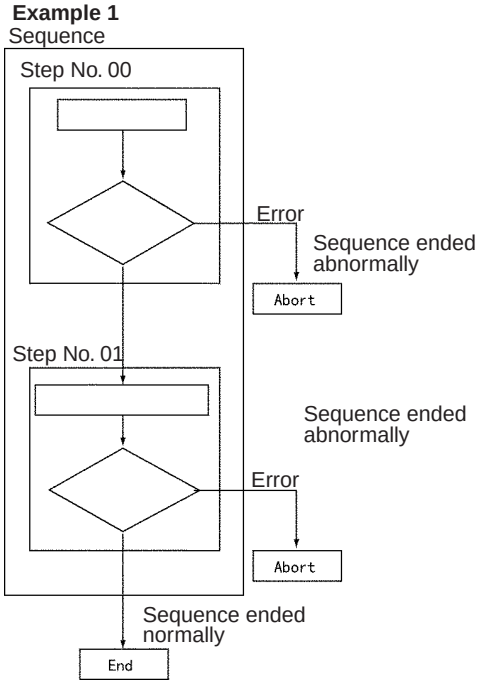

Example 2

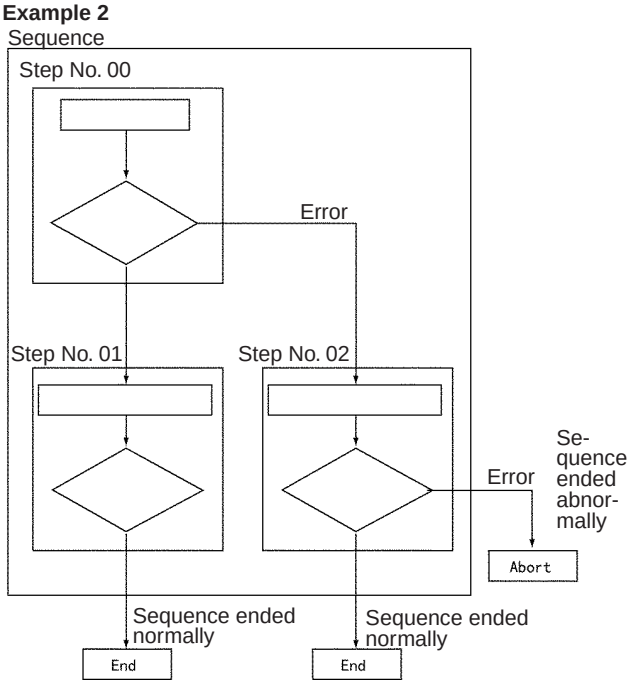

When the Sequence Ends Normally

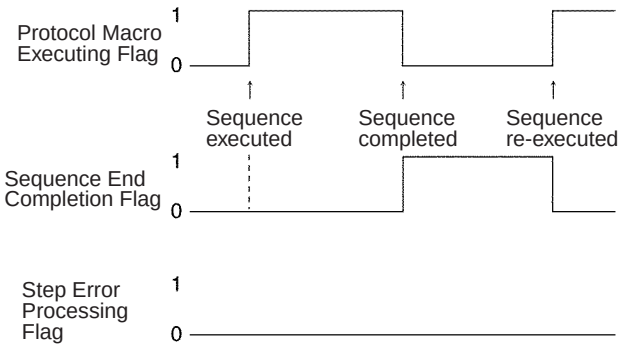

When the Sequence Ends Normally

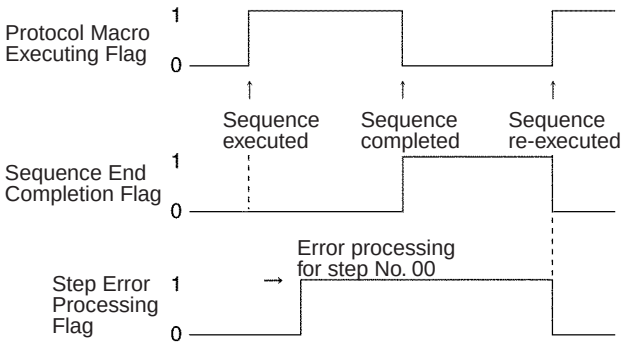

When the Sequence Ends Abnormally

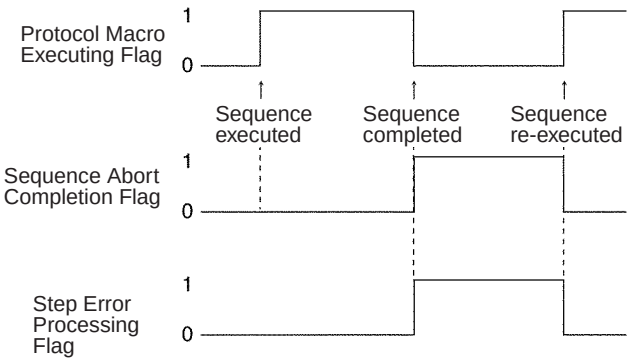

When the Sequence Ends Abnormally

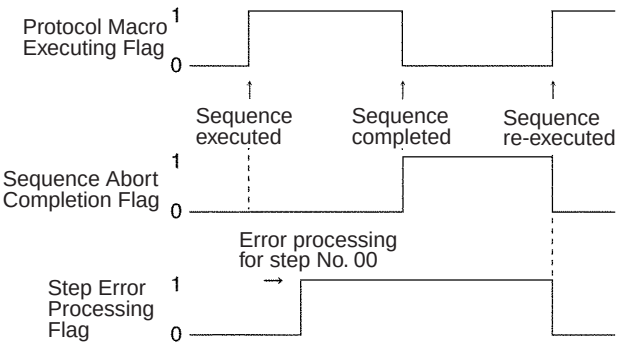

Note The Step Error Processing Flag is used to see whether error processing has been executed for an individual step in a sequence, and not for the overall steps. Therefore, as shown in Ex ample 2 above, after executing error processing during a sequence (step No. 00), the flag will remain ON, even if the next step ends normally. Care is therefore required because it is not always possible to use this flag to determine whether the overall sequence has ended abnormally.

Precautions on Using the Forced Abort Bit

The Protocol Macro Executing Flag will turn OFF as soon as the Forced Abort Bit is turned ON from the ladder program. The Forced Abort Bit must remain ON for at least 15 ms longer than the CPU Unit cycle time. Thus, the sequence will not be aborted if the Forced Abort Bit is turned OFF as soon as the Protocol Macro Executing Flag turns OFF.

If only the Protocol Macro Execution Flag is used in an NC condition for PMCR(—), PMCR(—) will be executed during abort processing, and system error (FAL 9C) will occur. Wait at least 15 ms longer than the cycle time after turning ON the Forced Abort Bit before executing the next protocol macro.

In the following example, the Forced Abort Bit is turned ON and an interlock is created for the PMCR(—) instruction for 30 ms before the Forced Abort Bit is turned OFF.

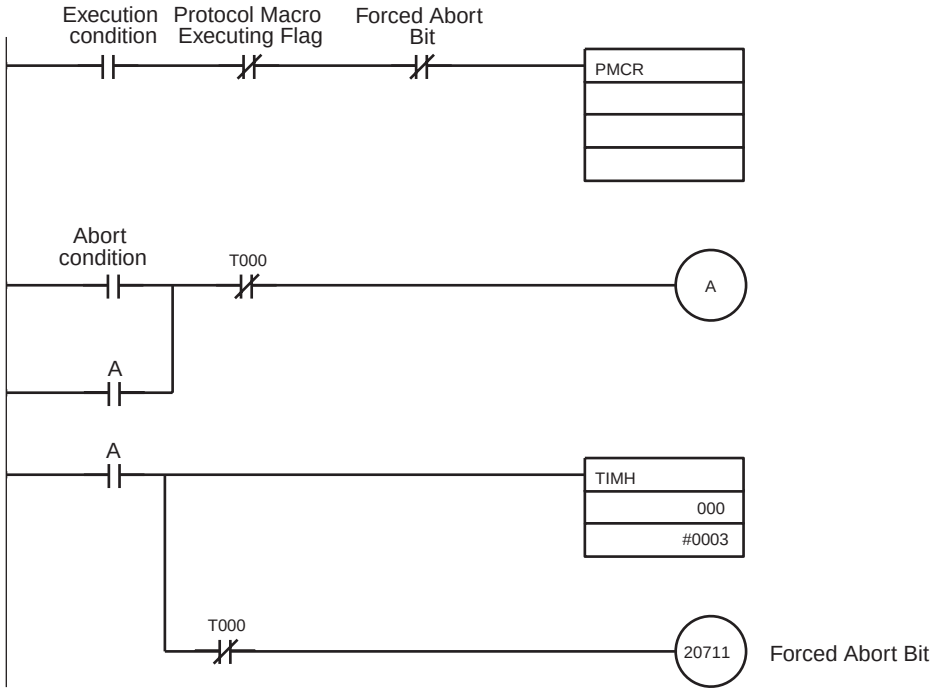

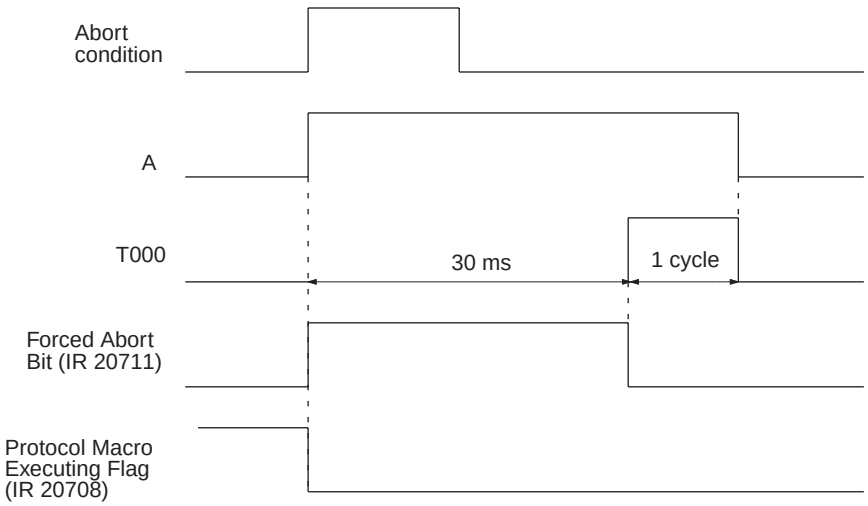

Note 1. Observe the following precautions when using the Restart Flag.

- The Restart Flag is used to initialize the communications ports. When it is turned ON, either with a ladder program or with the monitor function of the Support Tool, restart processing will begin after the protocol macro is executed. Once restart processing is completed, the Restart Flag will turn OFF again. The protocol macro will not end if this flag is ON during its execution. To restart regardless of its executable/non-executable status, turn ON the Forced Abort Bit (20711/20715) also.
- To execute PMCR(—) following the restart processing, wait longer than the CPU Unit cycle time + 15 ms. This will allow the restart processing inside the communications board to be completed. If PMCR(—) is executed during the restart processing, a system error (FAL 9C) will occur, and the protocol macro may not be properly executed.

2. If communications errors or retries occur with an RS-485 2-wire connection, use the following countermeasure.
   This is possible with products of Lot No. 0320 or later.*
   *Reading lot numbers

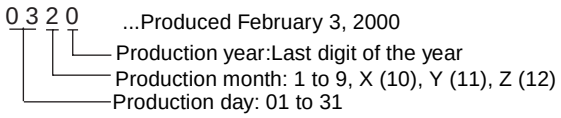

When the serial communications mode for the port of the Serial Communications Board is set to Protocol Macro mode, and the send control parameter in the protocol macro is set to modem control, the following special auxiliary bit flags are enabled.

Bit address	Function	Description
20706	**Port 1 Echoback Disable Mode Flag** 1: Echoback disabled, 0: Echoback enabled	Sets the Serial Communications Board.
20707	**Port 2 Echoback Disable Mode Flag** 1: Echoback disabled, 0: Echoback enabled	Sets the Serial Communications Board.
20406	**Port 1 Echoback Disable Mode Monitor Flag** 1: Echoback disabled, 0: Echoback enabled	Used to monitor the setting of the Serial Communications Board.
20407	**Port 2 Echoback Disable Mode Monitor Flag** 1: Echoback disabled, 0: Echoback enabled	Used to monitor the setting of the Serial Communications Board.

With the Echoback Disable Mode Flag (Port 1: 20706, Port 2: 20707) set to 1 (ON) and the RS-485 2-wire connection used, the data sent from the port of the Serial Communications Board will be blocked by software from returning to the reception line of the same port as long as the RS signal is set to 1 (ON).

If communications errors or retries occur with the 2-wire connection, use a ladder program to form a circuit that sets the Echoback Disable Mode Flag to 1 (ON).

Also, the data that is received during data transfer (while the RS signal is ON) with the Echoback Disable Mode is not input to the system, nor is it reflected in the CX-Protocol trace data. Changes in the Echoback Disable Mode Flag (Port 1: 20706, Port 2: 20707) from 0 (OFF) to 1 (ON) are always input to the system while the ladder program is running, but the 0 (OFF) state is only input to the Serial Communications Board at the start of the ladder program. Therefore, to cancel the Echoback

Disable Mode, it is not sufficient to simply set the Echoback Disable Mode Flags to 0 (OFF) while executing the protocol macro. Either switch once to the Program mode, and then start running again, or turn the power supply OFF and then ON. The Echoback Disable Mode Monitor Flag (Port 1: 20406, Port 2: 20407) can be used to check the Echoback Disable Mode of each port.

Ladder Diagram

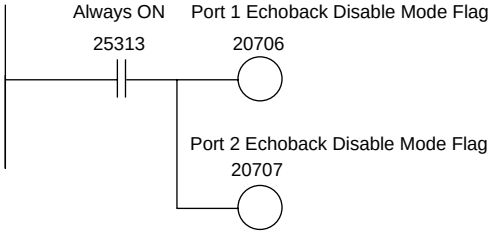

Note The following describes the relationship between the RS-485 2-wire connection and the echoback.

Because the send line and receive line share a single, paired cable in the RS-485 2-wire connection, the sent data returns to the cable's own receive line (see figure on following page). This is called "echoback" in this manual.

In the protocol macro function, in order to enable signals to be sent and received without the user having to specifically define this echoback data as an expected receive message, the system is designed to produce only a reception trace, via firmware, on the Serial Commmunications Board, while ignoring the data. However, in performance, it is sometimes difficult to distinguish between proper responses and echoback data responses due to variations in the echoback data delay, or variations in the processing time of the Serial Communications Board firmware, and communication errors may result by mistaking echoback data for an expected receive message.

The reception of unnecessary echoback messages can thus be prevented by setting the Echoback Disable Mode Flag to 1 (ON).

■ **2-wire connection using the RS-422A/485 port of the CQM1H-SCB41**

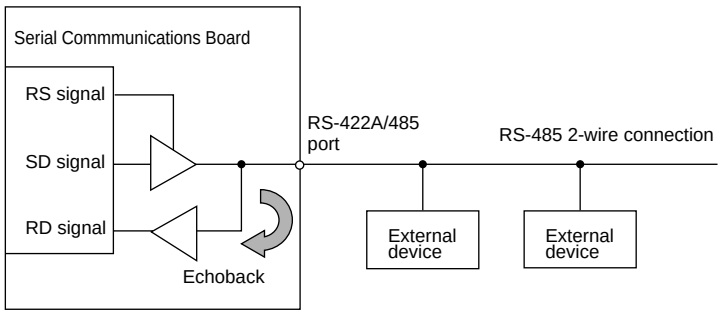

■ **2-wire connection using NT-AL001 and the RS-232C port of the CQM1H-SCB41**

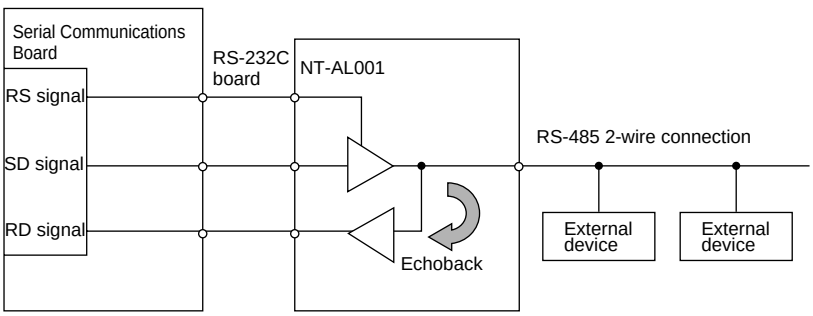

■ **Waveform image for send/receive signals in 2-wire connection**

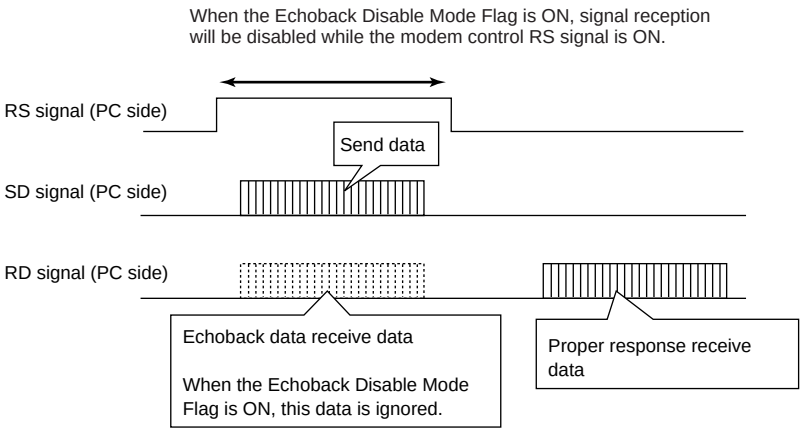

Note The condition of the 20700 to 20707, 20711, and 20715 flags is also maintained during interruptions in the power supply.
When 20711 or 20715 (Forced Abort Bit for Port 1 or Port 2) is set to 1 (ON), signals will not be sent or received.
Use a Programming Device to clear the flag, or use a ladder program to form a circuit that sets these bits to 0 (OFF).

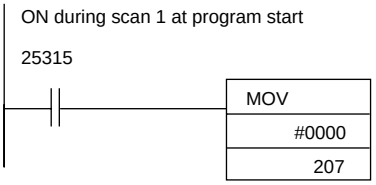

SECTION 6
No-protocol Communications

This section provides information required to use no-protocol communications on a Serial Communications Board port.

6-1 Overview 100
6-2 Application Procedure 102
6-3 Connections 103
6-4 Using No-protocol Communications 104
6-4-1 TRANSMIT – TXD(—) and RECEIVE – RXD(—). 104
6-4-2 TXD(—) Communications Procedure 106
6-4-3 RXD(—) Communications Procedure 106
6-4-4 Application Example 107

6-1 Overview

Data can be sent or received without a protocol and without conversion by connecting an external device to the RS-232C port and executing the TXD(—) or RXD(—) instruction from the ladder program. Start and end codes can be attached to the data or the amount of data to be received can be specified.

The communications frame cannot be specified for no-protocol communications in the way it can be for protocol macros. Retry processing, data conversion, and procedural branching according to received data are also not possible. No-protocol communications are thus good for communicating with bar code readers and other external devices with RS-232C ports that do not required command-response procedures. Data is sent in one direction only, using TXD(—) to send data from the port or RXD(—) to read data received on the port.

Note When TXD(—) is executed in No-protocol Mode, data from I/O memory is sent from the port without conversion. When TXD(—) is executed in Host Link mode (for slave-initiated communications), the contents of the specified words in I/O memory is converted to ASCII before being sent.

No-protocol Specifications

The specifications of no-protocol communications are given in the following table.

Item	Specification	
Messages (communications frame)	One of the following. Data only Start code + data Data + end code Start code + data + end code Data + CR + LF Start code + data + CR + LF Settings are made in the PC Setup: Start code enable, end code enable, start code, end code, number of receive bytes (when end code is disabled)	
	Start code	Disabled or 00 to FF Hex
	End code	Disabled, 00 to FF Hex, or CR+LF
	Number of receive bytes	1 to 256 bytes if transmission ends in data (data only or start code + data)
Message transmissions	TXD(—) in ladder program	
Message receptions	RXD(—) in ladder program	
Maximum message length	256 bytes including start code and end codes (253 bytes without start/end codes) for either sending or receiving	
Data conversion	None	
Communications protocol	None	
Transmission delay	0 to 99,990 ms (set in PC Setup in units of 10 ms) The transmission delay is from the beginning of TXD(—) execution until execution of the next TXD(—) can be started.	
Reception counter	The number of bytes received at the port can be counted from 0 to 256 bytes.	

Send/Receive Message Frames

Start code	End code		
	No	Yes	CR+LF
No	Data 256 bytes max.	Data ED 256 bytes max.	Data CR+LF 256 bytes max.
Yes	ST Data 256 bytes max.	ST Data ED 256 bytes max.	ST Data CR+LF 256 bytes max.

- Only the first start code is valid if there is more than one start code.
- Only the first end code is valid if there is more than one end code.
- Use CF+LF if using an end code may cause receptions to be interrupted because the end code exists in the receive data.
- A transmission delay can be set for PC-initiated communications as a minimum interval between sending commands to the host.

  The delay is not used in sending the first command. The delay will affect other commands only if the time set for the transmission delay has not expired when the next command is ready to be sent.

  If the delay time has already expired when the next command is ready, the command will be spent immediately. If the delay time has not expired, the command will be delayed until the time set for the transmission delay has expired.

  The operation of the transmission delay for PC-initiated communications is illustrated below.

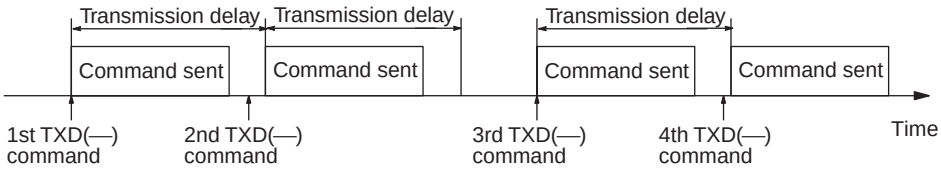

Refer to the *CQM1H Programming Manual* for details on TXD(—) and RXD(—).

6-2 Application Procedure

1,2,3...

1. Turn OFF the power supply to the PC.
2. Mount the Board.
3. Connections

   Connect the external devices using RS-232C or RS-422 cables. The TERM and WIRE switches on the front panel of the Board must be set if the Board is connected using the RS-422A/485 port.

   The CPU Unit can be connected to a Programming Console, the CX-Programmer, or the CX-Protocol as required.
4. Turn ON power.
5. Set the PC Setup settings for the Serial Communications Board.

   Use a Programming Console, the CX-Programmer, or the CX-Protocol to set the settings in the PC Setup between DM 6500 and DM 6559.

   Note The settings stored in these words are read constantly; the PC does not need to be restarted or reset when changes are made to the settings. They will be updated automatically as soon as they are changed.

   The following table shows the settings for using STX as the start code, CR+LF as the end code, and no transmission delay.

Port 1	Port 2	Bit(s)	Setting	Function
DM 6555	DM 6550	00 to 03	0 Hex	Standard port settings (1 start bit, 7-bit data, even parity, 2 stop bits, 9,600 bps)
		04 to 11	---	Not used.
		12 to 15	1 Hex	Serial communications mode No-protocol
DM 6556	DM 6551	00 to 07	00 Hex	Baud rate setting disabled.
		08 to 15	00 Hex	Frame format setting disabled.
DM 6557	DM 6552	00 to 15	0000 (BCD)	Transmission delay: 0 ms 0000 to 9999 (BCD): Set in units of 10 ms
DM 6558	DM 6553	00 to 07	---	Not used.
		08 to 11	1 Hex	Start code enabled
		12 to 15	2 Hex	End code enabled as CR+LF 0: Disable (number of receive bytes set) 1: Set (specified end code) 2: CR, LF
DM 6559	DM 6554	00 to 07	02 Hex	Start code: STX
		08 to 15	00 Hex	Number of receive bytes (Disabled when end code is set.)

6. Write and execute the ladder program. Use TXD(—) to send data to an external device and RXD(—) to receive data from an external device.

6-3 Connections

The connection examples in this section show only the basic connection diagrams. We recommend that appropriate noise countermeasures be taken in actual applications, including the use of shielded twisted-pair cables. Refer to *2-3 Wiring* for actual wiring methods.

Connecting to a Bar Code Reader via RS-232C

The following diagram shows the connections between an OMRON V500-series Bar Code Reader and the RS-232C port on the Serial Communications Board.

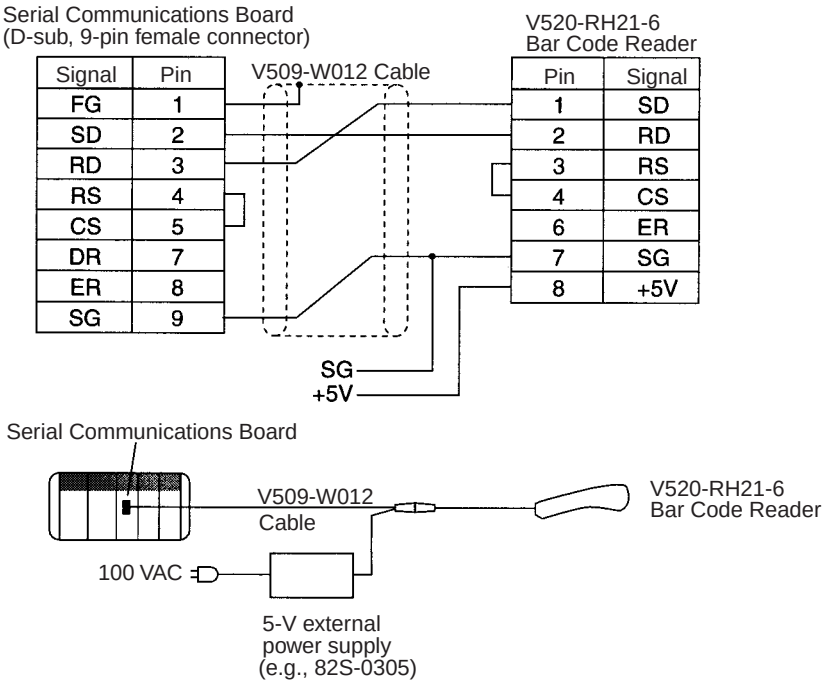

Note If the external device has a FG terminal, connect the shield wire to ground at both the external device and the Serial Communications Board to prevent faulty operation.

6-4 Using No-protocol Communications

6-4-1 TRANSMIT – TXD(—) and RECEIVE – RXD(—)

This section describes using TXD(—) and RXD(—) for no-protocol communications.

TRANSMIT – TXD(—) in No-protocol Mode

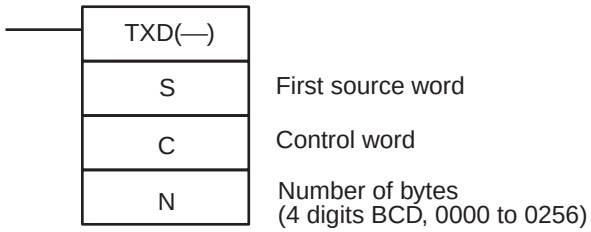

Control Word: C

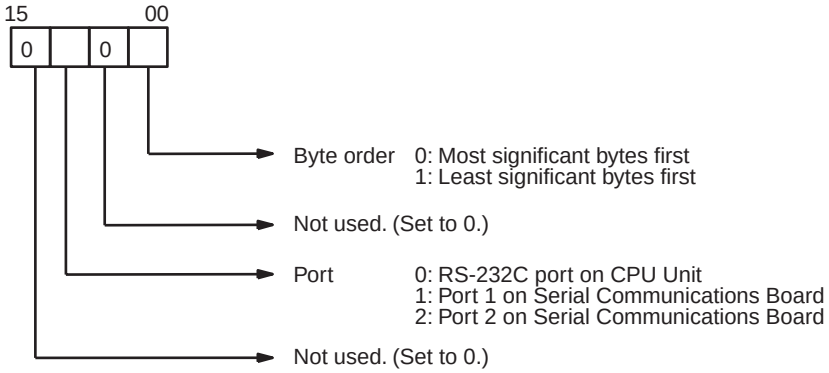

The specified number of bytes will be read starting from S and transmitted through the specified port.

- Up to 256 bytes of data can be sent each time the instruction is executed.
- The bytes of source data shown below will be sent in the following order.

  If most significant bytes first is specified (0): 12345678..
  If least significant bytes first is specified (1): 21436587..

	MSB	LSB
S	1	2
S+1	3	4
S+2	5	6
S+3	7	8
⋮	⋮	⋮

Communications parameters are set in the PC Setup settings for the Serial Communications Board. Refer to information in the *CQM1H Programming Manual* on serial communications and TXD(—) for details.

RECEIVE – RXD(—) in Noprotocol Mode

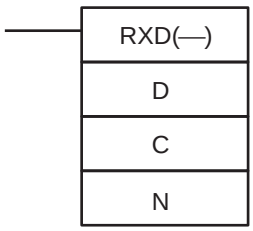

First destination word

Control word

Number of bytes
(4 digits BCD, 0000 to 0256)

Control Word: C

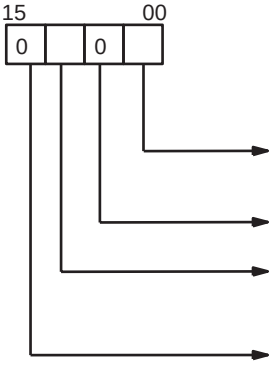

Byte order 0: Most significant bytes first
1: Least significant bytes first

Not used. (Set to 0.)

Port 0: RS-232C port on CPU Unit
1: Port 1 on Serial Communications Board
2: Port 2 on Serial Communications Board

Not used. (Set to 0.)

The specified number of bytes are read from the specified port as specified in the control word and stored starting at D.

- Up to 256 bytes of data can be read each time the instruction is executed.
- The bytes of received data will be received in the following order.

Digit 0 = 0

	MSB	LSB
D	1	2
D+1	3	4
D+2	5	6
D+3	7	8
⋮	⋮	⋮

Digit 0 = 1

	MSB	LSB
D	2	1
D+1	4	3
D+2	6	5
D+3	8	7
⋮	⋮	⋮

- If the value of N is larger than the number of receive bytes, only the number of bytes actually received will be read into memory.
- Communications parameters for the Serial Communications Board are set in the PC Setup. Refer to the *CQM1H Programming Manual* for details.

6-4-2 TXD(—) Communications Procedure

Confirm that the Transmission Enabled Flag is ON before executing TXD(—). The Port 1 Transmission Enabled Flag is IR 20105 and the Port 2 Transmission Enabled Flag is IR 20113. The Transmission Enabled Flag will turn OFF while TXD(—) is being executed and will turn ON when the send has been completed.

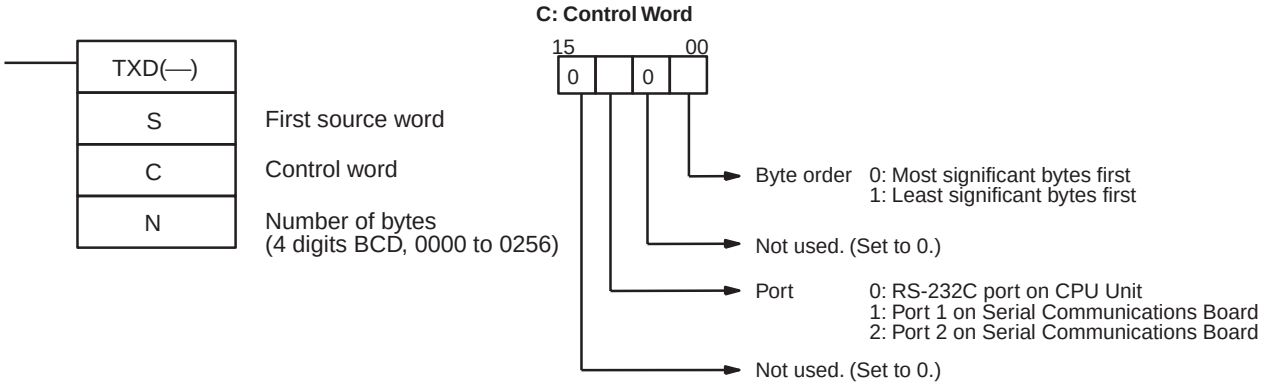

Note Do not let TXD(—) be executed unless the Transmission Enabled Flag is ON.

6-4-3 RXD(—) Communications Procedure

The Reception Completed Flag will turn ON when data reception has been completed. The Port 1 Reception Completed Flag is IR 20106 and the Port 2 Reception Completed Flag is IR 20114.

When RXD(—) is executed, the receive data is stored in the specified data without any start or end code and the Reception Completed Flag is turned OFF.

Reception is started when the start code is received. If the start code is disabled, then data is received continually.

Reception is completed when the end code is received. If the end code is disabled, then reception is completed when the specified number of bytes or 259 bytes have been received.

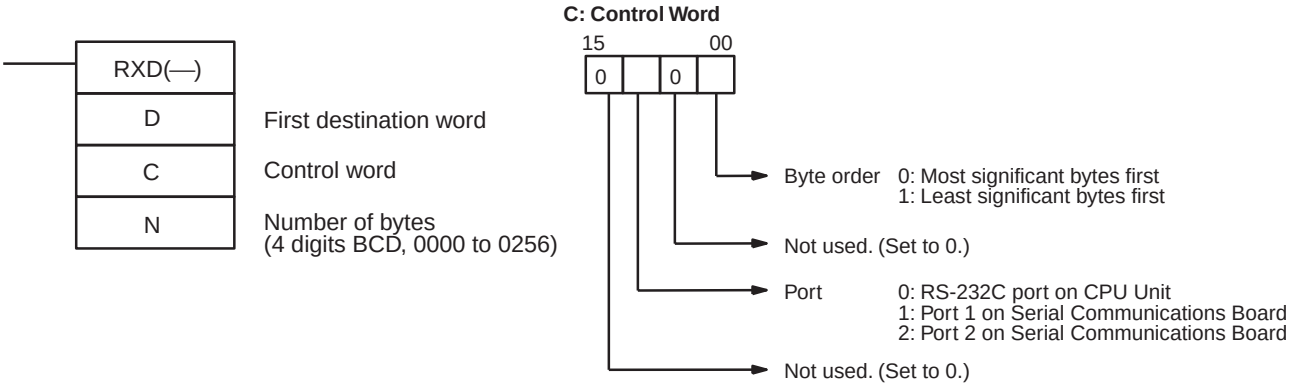

The following flags and status information are available in the IR area. All bits are cleared when RXD(—) is executed.

Port 1	Port 2	Function
IR 20100 to IR 20103	IR 20108 to IR 20111	Error Code 0: Normal operation 1: Parity error 2: Framing error 3: Overrun error
IR 20104	IR 20112	Communications Error Flag
IR 20107	IR 20115	Reception Overflow Flag (Turns ON when data is received again before the previous data is read with RXD(—).)
IR 20200 to IR 20215	IR 20300 to IR 20315	Reception counter Provides the number of bytes of data received in 4-digit BCD (0 to 256).

The Port 1 Restart Bit (IR 20700) and Port 2 Restart Bit (IR 20701) can be turned ON to initialize the serial communications ports. These bits will be turned OFF automatically after the ports have been initialized.

6-4-4 Application Example

This example shows how to send data from DM 0100 to DM 0104 (each word contains 3454) to a computer and then store data received from the computer starting at DM 0200.

Conditions

PC Settings

The following settings are made in the PC Setup before executing the program.

Communications mode: No-protocol
Port settings: Standard
Start code: None
End code: CR + LF
Other: Default settings

Computer Settings

Set the same communications parameters as the PC and prepare the programs to send and receive data.

Ladder Programming

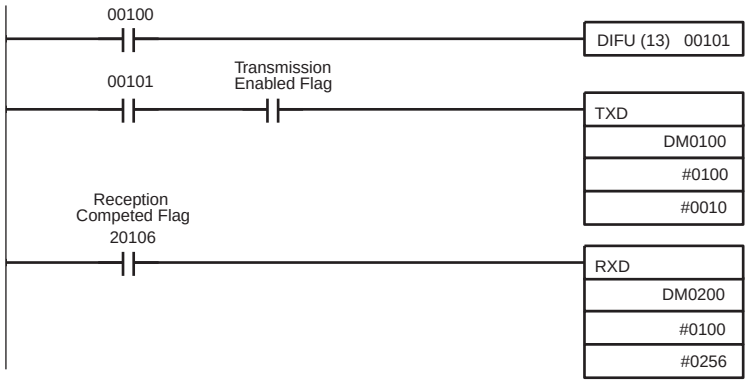

1,2,3... 1. When IR 00100 turns ON, the contents of DM 0100 to DM 0104 will be sent with most significant bytes first from port 1 on the Serial Communications Board if IR 20105 is ON (Transmission Enabled Flag).

The following data will be received at the computer:

34543454345434543454CRLF

2. When IR 20106 (Reception Competed Flag) turns ON, 256 bytes of data received on port 1 on the Serial Communications Board will be read and stored starting at DM 0200 with most significant bytes first.

SECTION 7
Communications for 1:1 Data Links

This section provides information required to create 1:1 Data Links through a Serial Communications Board port.

7-1 Overview 110
7-1-1 Starting Data Links 110
7-1-2 Specifications 111
7-2 Application Procedure 111
7-3 Connections 112
7-4 Using 1:1 Data Links 113

7-1 Overview

If two PCs are linked one-to-one by connecting them together through RS-232C or 4-wire RS-422A/485 cable, they can share up to 64 words of their LR areas. The 1:1 Data Links are the same as normal Data Links in that data is not shared bidirectionally, i.e., the link words written by one PC are transferred to the other PC.

One of the following three ranges of words can be set to be linked:
LR 00 to LR 63, LR 00 to LR 31, or LR 00 to LR 15

A 1:1 Data Link communications system can be created between the CQM1H and another CQM1H, or between the CQM1H and the CQM1, C200HX/HG/HE, C200HS, CPM1, CPM1A, CPM2A, CPM2C, or SRM1(-V2).

One of the PCs is set as a 1:1 Data Link master and the other as a 1:1 Data Link slave. The linked words are separated into two groups of words, and the words written by each PC is transferred to the other PC, as illustrated in the following diagram.

For example, if LR 00 to LR 63 are linked, the status of LR 00 to LR 31 written by the master CQM1H will be transferred to LR 00 to LR 31 of the slave CQM1H, and the status of LR 32 to LR 63 written by the slave CQM1H will be transferred to LR 32 to LR 63 of the master CQM1H.

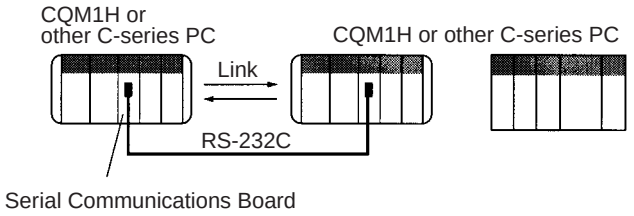

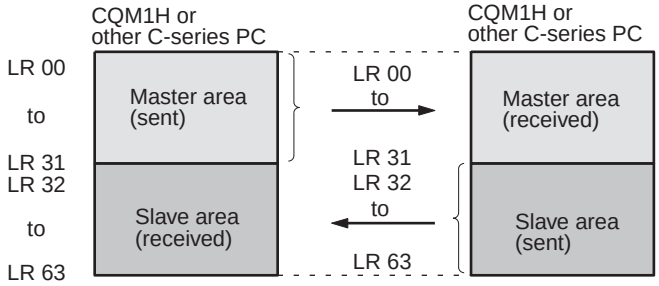

The words in the LR area that will be linked are set in the PC Setup as shown in the following table.

PC Setup Setting

Port 1	Port 2	Bits	Function	Setting	Master words	Slave words
DM 6555	DM 6550	04 to 07	Link words for 1:1 link	0 Hex: LR 00 to LR 63	LR 00 to LR 31	LR 32 to LR 63
				1 Hex: LR 00 to LR 31	LR 00 to LR 15	LR 16 to LR 31
				2 Hex: LR 00 to LR 15	LR 00 to LR 07	LR 08 to LR 15

7-1-1 Starting Data Links

Connect two PCs one-to-one through RS-232C or 4-wire RS-422A/485 cable, make the proper settings in the PC Setup, and turn ON the power supplies. The 1:1 Data Link will start automatically.

7-1-2 Specifications

Item	Specification	
Connection method	Connection of 2 PCs through their RS-232C ports (prepared cable). **Note** RS-422A/485 ports can also be connected if a 4-wire connection method is used.	
Applicable PCs	CQM1H, CQM1, CPM1, CPM1A, CPM2A, CPM2C, or SRM1(-V2), C200HX/HG/HE, C200HS There are restrictions in the number of words that can be linked for some PCs.	
Number of nodes linked	2	
Number of words linked	64 words, LR 00 to LR 63	32 words sent per node
	32 words, LR 00 to LR 31	16 words sent per node
	16 words, LR 00 to LR 15	8 words sent per node
Linked words	One of three groups listed above	
Link word setting	PC Setup in master PC	
Order of allocation	Words allocated to master PC first and then to slave PC.	
Startup method	Automatic startup after turning ON power to master and slave PCs.	
Status flags	None	

7-2 Application Procedure

1,2,3...

1. Turn OFF the power supply to the PC.
2. Mount the Board.
3. Connections

   Connect the external devices using RS-232C or RS-422 cables. The TERM and WIRE switches on the front panel of the Board must be set if the Board is connected using the RS-422A/485 port.

   The CPU Unit can be connected to a Programming Console, the CX-Programmer, or the CX-Protocol as required.
4. Turn ON power.
5. Set the PC Setup settings for the Serial Communications Board.

   Use a Programming Console, the CX-Programmer, or the CX-Protocol to set the settings in the PC Setup between DM 6550 and DM 6559.

   Note The settings stored in these words are read constantly; the PC does not need to be restarted or reset when changes are made to the settings. They will be updated automatically as soon as they are changed.

The following table shows the master PC settings for a 1:1 Data Link for LR 00 to LR 63.

Port 1	Port 2	Bits	Setting	Function
DM 6555	DM 6550	00 to 07	---	Not used.
		08 to 11	0 Hex	Link words for 1:1 Data Link 0: LR 00 to LR 63 (default) 1: LR 00 to LR 31 2: LR 00 to LR 15
		12 to 15	3 Hex	Communications mode 2: 1:1 Data Link slave 3: 1:1 Data Link master
DM 6556	DM 6551	00 to 15	---	Not used.
DM 6557	DM 6552	00 to 15	---	Not used.
DM 6558	DM 6553	00 to 15	---	Not used.
DM 6559	DM 6554	00 to 15	---	Not used.

6. Write and executed the ladder program.

   The Always ON Flag (SR 25313) can be use to program instructions such as MOV(21) to write data to be sent to the other PC to the sending words in the LR area and to read data received from the other PC in the receiving words in the LR area.

7-3 Connections

The connection examples in this section show only the basic connection diagrams. We recommend that appropriate noise countermeasures be taken in actual applications, including the use of shielded twisted-pair cables. Refer to *2-3 Wiring* for actual wiring methods.

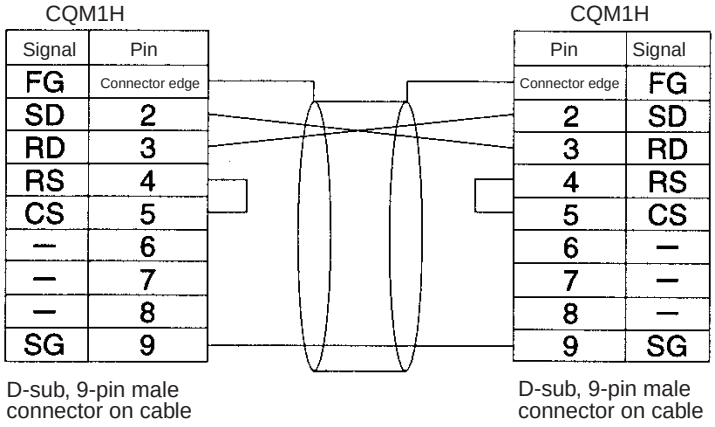

7-4 Using 1:1 Data Links

This section provides an example of using 1:1 Data Links.

Conditions

The following settings are made in the PC Setup before executing the program.

Master PC Settings

Communications mode: 1:1 Data Link master
Link words: LR 00 to LR 15

Slave PC Settings

Communications mode: 1:1 Data Link slave

Ladder Programming

Master PC

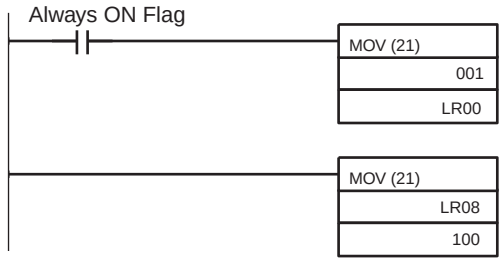

Slave PC

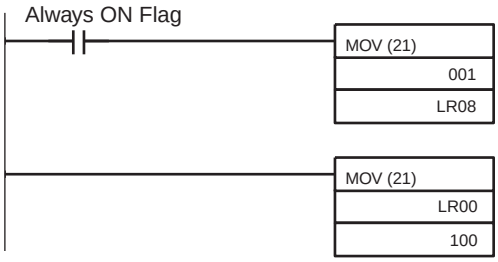

When the programs in the two PCs are executed, the status of input word IR 001 of both PCs will be transferred to the other PC and will be output to output word IR 100.

SECTION 8
NT Link Communications

This section describes the procedure and other information required to use 1:N-mode and 1:1-mode NT Links to Programmable Terminals (PTs).

8-1 Overview of NT Links 116
8-1-1 NT Links — 1:N Mode 116
8-1-2 NT Links — 1:1 Mode 116
8-1-3 Precautions 116
8-2 Application Procedure 118
8-3 Connections 119

8-1 Overview of NT Links

This section explains the application of a Serial Communications Board for an NT Link in either 1:N or 1:1 mode. For details on the operation of the PT, refer to the operation manual for the PT.

Note In an NT Link using 1:N mode, a PC can be connected to either one or more than one PTs. There is no difference in functionality determined by the number of PTs connected. The 1:1 mode, however, uses a different communications protocol from the 1:N mode and these two modes are not compatible.

8-1-1 NT Links — 1:N Mode

A PC can be connected to one or more Programmable Terminals (PTs) using an RS-232C or RS-422A/485 port. The I/O memory of the PC is allocated as a Status Control Area and a Status Notification Area for the PT, as well as to objects, such as touch switches, lamps, and memory tables. This enables the status of the I/O memory in the PC to be controlled and monitored by operations from the PT, without the use of ladder programming in the PC. One PC can be connected to up to eight PTs.

The user does not need to be aware of the 1:N NT Links commands. All that is necessary is to allocate PC memory for the PTs.

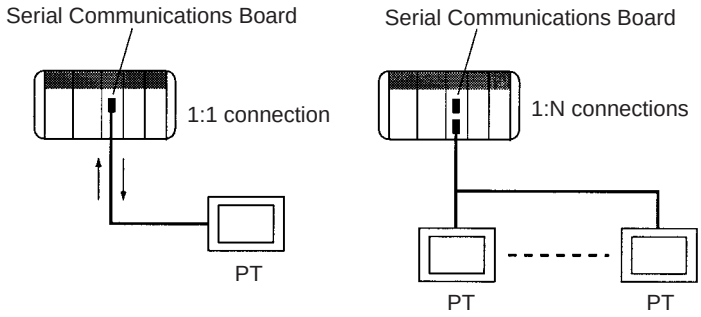

8-1-2 NT Links — 1:1 Mode

Although the functionality of an NT Link in 1:1 mode is the same as an NT Links in 1:N mode, only one PT can be connected to the PC. The 1:1 mode is not compatible with the 1:N mode as a communications protocol.

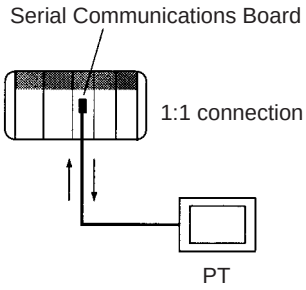

8-1-3 Precautions

1,2,3...

1. Set the serial port on the PT to a 1:N NT Link whenever the Serial Communications Board is set to a 1:N NT Link, and set the serial port on the PT to a 1:1 NT Link whenever the Serial Communications Board is set to a 1:1 NT Link. The Serial Communications Board will not be able to communicate if the PT port is set to a different mode.
2. The NT20S, NT600S, NT30/30C, and NT620S/620C/625C cannot be used if the cycle time of the PC is 800 ms or longer. This is true in both 1:1 and 1:N mode (even when a 1:1 connection is used in 1:N mode).

3. The Programming Console functions of the PT (Expansion Mode) cannot be used when connected to Serial Communications Board ports. They can be used only by connecting to the peripheral port or RS-232C port on the CPU Unit. This is true in both 1:1 and 1:N mode.
4. When using 1:N-mode NT Links, set a unique unit number for each PT connected to the same PC. If the same unit number is set for more than one PT, malfunctions will occur.
5. The number of PTs that can be connected to one port in 1:N mode is limited by the CPU Unit's cycle time when a Serial Communications Board is used, as shown in the following diagrams. Although some communications will be possible even if these restrictions are exceeded, communications errors will occur depending on the PT operating conditions and communications load. Always abide by these restrictions when using 1:N mode.

Example for NT31/NT631(C) PTs

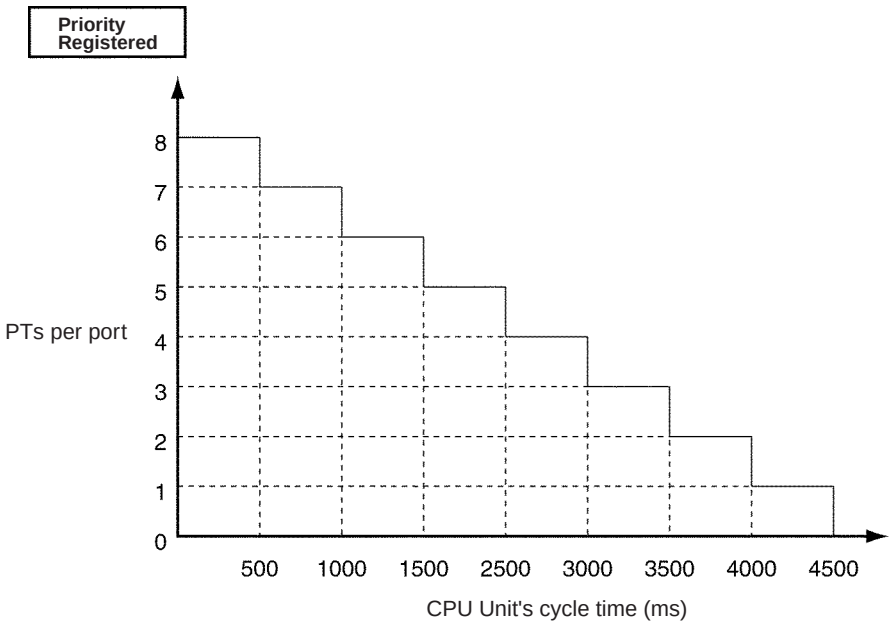

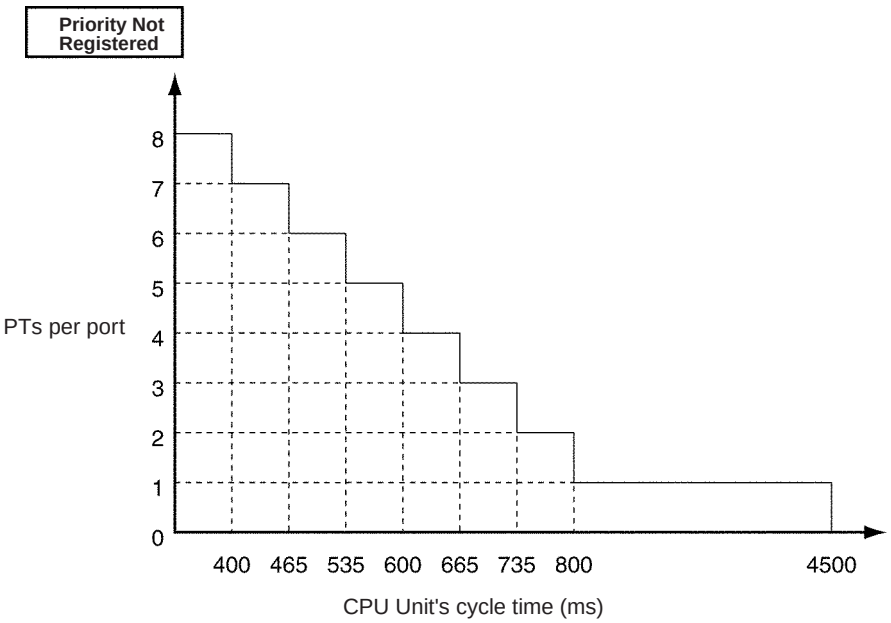

6. With some PTs, timeout settings can be changed to eliminate some of the communications errors. Refer to the operation manual for the PT for details. This is true in both 1:1 and 1:N mode.
7. If more PTs are required by the system than allowed by the above restrictions in 1:N mode, connect the PTs in smaller groups to different ports.

8-2 Application Procedure

1,2,3...

1. Turn OFF the power supply to the PC.
2. Mount the Board.
3. Connections

   Connect the external devices using RS-232C or RS-422 cables. The TERM and WIRE switches on the front panel of the Board must be set if the Board is connected using the RS-422A/485 port.

   The CPU Unit can be connected to a Programming Console, the CX-Programmer, or the CX-Protocol as required.
4. Turn ON power.
5. Set the PC Setup settings for the Serial Communications Board.

   Use a Programming Console, the CX-Programmer, or the CX-Protocol to set the settings in the PC Setup between DM 6550 and DM 6559.

   Note The settings stored in these words are read constantly; the PC does not need to be restarted or reset when changes are made to the settings. They will be updated automatically as soon as they are changed.

NT Link Settings for 1:N Mode

The following table shows the settings for connecting more than one PT when the highest PT unit number is 5.

Port 1	Port 2	Bit(s)	Setting	Function
DM 6555	DM 6550	00 to 07	---	Not used.
		08 to 11	5 (BCD)	Maximum Programmable Terminal unit number 1 to 7 (BCD) NT Link in 1:N mode
		12 to 15	5 Hex	Communications mode NT Link in 1:N mode
DM 6556	DM 6551	00 to 15	---	Not used.
DM 6557	DM 6552	00 to 15		
DM 6558	DM 6553	00 to 15		
DM 6559	DM 6554	00 to 15		

Port Settings are always the same for 1:N-mode NT Links. Settings of the start bits, stop bits, parity, and baud rate are not necessary and will be ignored.

Set the communications mode to a 1:N-mode NT Link (5 Hex).

Up to 8 PTs can be connected in 1:N mode. Set the highest unit number of the PTs to be connected as the maximum Programmable Terminal unit number.

NT Link Settings for 1:1 Mode

The following table shows the settings for a 1:1-mode NT Link.

Port 1	Port 2	Bit(s)	Setting	Function
DM 6555	DM 6550	00 to 11	---	Not used.
		12 to 15	4 Hex	Communications mode NT Link in 1:1 mode

Port 1	Port 2	Bit(s)	Setting	Function
DM 6556	DM 6551	00 to 15	---	Not used.
DM 6557	DM 6552	00 to 15		
DM 6558	DM 6553	00 to 15		
DM 6559	DM 6554	00 to 15		

Port Settings are always the same for 1:1-mode NT Links. Settings of the start bits, stop bits, parity, and baud rate are not necessary and will be ignored.

Set the communications mode to a 1:1-mode NT Link (4 Hex).

6. Operate the system.

   Refer to the operation manual for your PT for operating instructions.

8-3 Connections

The connection examples in this section show only the basic connection diagrams. We recommend that appropriate noise countermeasures be taken in actual applications, including the use of shielded twisted-pair cables. Refer to *2-3 Wiring* for actual wiring methods.

Direct 1:1 Connection from RS-232C to RS-232C Ports (1:1 or 1:N Mode)

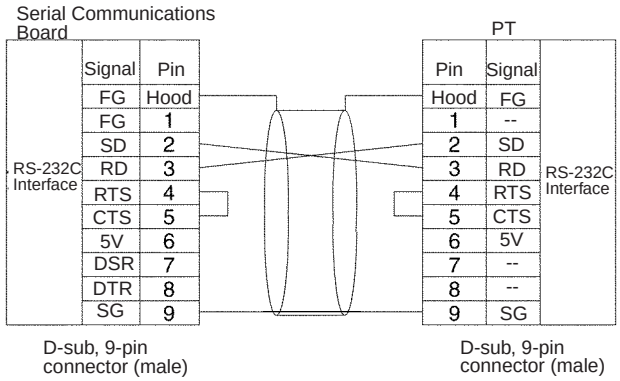

- Communications Mode: 1:1 or 1:N-mode NT Link
- OMRON Cables with Connectors:
  XW2Z-200T-1: 2 m
  XW2Z-500T-1: 5 m

Direct 1:1 Connection from RS-422A/485 to RS-422A/485 Ports (1:1 or 1:N Mode)

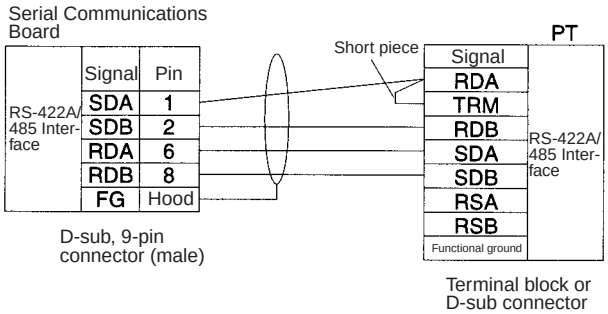

- Communications Mode:1:1 or 1:N-mode NT Link

Note Serial Communications Board settings: Terminating resistance ON, 4-wire.

1:N, 4-wire Connections from RS422A/485 to RS422A/485 Ports (1:N Mode)

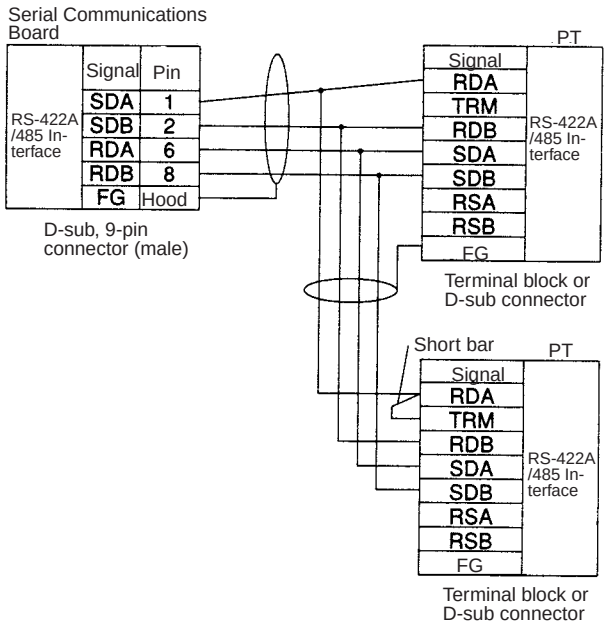

Communications Mode: 1:N NT Link

Note Serial Communications Board settings: Terminating resistance ON, 4-wire.

1:N, 2-wire Connections from RS-422A/485 to RS-422A/485 Ports (1:N Mode)

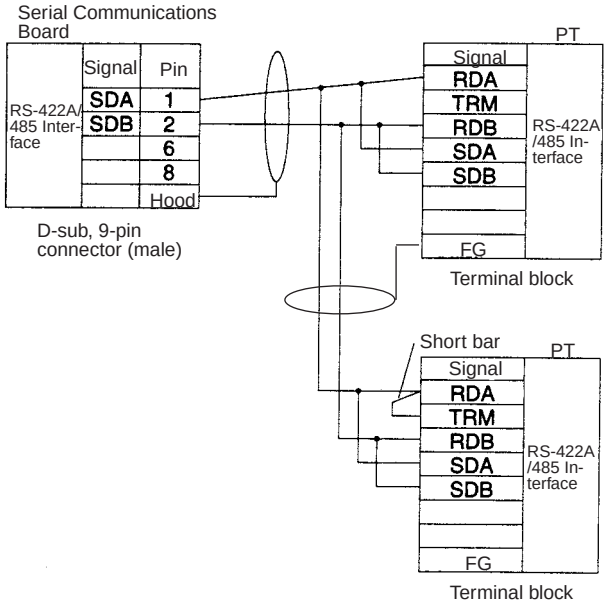

Communications Mode: 1:N NT Link

Note Serial Communications Board settings: Terminating resistance ON, 2-wire.

SECTION 9
Troubleshooting and Maintenance

This section describes the troubleshooting and maintenance procedures for the Serial Communications Boards.

9-1 Front-panel Indicator Error Displays 122
9-2 Troubleshooting 124
9-2-1 Host Link Communications 124
9-2-2 Protocol Macros 127
9-2-3 1:N NT Link Mode 132
9-3 Cleaning and Inspection 133
9-3-1 Cleaning 133
9-3-2 Inspection 134
9-4 Board Replacement 135
9-4-1 Precautions 135
9-4-2 Settings after Replacing the Board. 135
9-4-3 Replacement Procedure 135

9-1 Front-panel Indicator Error Displays

Indicators		Possible cause	Remedy
Board	CPU Unit		
RDY	ERR/ALM		
Lit	Not lit	The Serial Communications Board has started normally.	---
Not lit	Lit	The Serial Communications Board is faulty (hardware self-diagnostic function). Board watchdog timer error: IR 20000 will turn ON. A bus error has occurred. An initialization recognition error has occurred (the Serial Communications Board is not correctly recognized by the CPU Unit).	If the ERR and ALM indicators light when the Serial Communications Board is mounted to another CPU Unit, replace the Serial Communications Board. Firmly secure the Serial Communications Board to the CPU Unit.
Not lit	Not lit	The CPU Unit is not receiving normal power supply. The Serial Communications Board is not correctly secured to the CPU Unit. The Serial Communications Board is faulty. An error (such as a CPU Unit WDT error) has occurred in the CPU Unit.	Check the power supply voltage and supply the correct electric power to the Unit. Firmly secure the Serial Communications Board. If all the indicators are not lit when the Serial Communications Board is mounted to another CPU Unit, replace the Serial Communications Board. Eliminate the cause of the error. If the error persists, replace the CPU Unit.
Lit	Lit	The Serial Communications Board is faulty. A bus error has occurred.	If all the indicators are lit when the Serial Communications Board is mounted in another CPU Unit, replace the Serial Communications Board. Check the operating environment and eliminate the cause of the error. Firmly secure the Serial Communications Board.
Lit	Flashing	An error has occurred in the CPU Unit. (Cause of error eliminated, but error not cleared.)	Eliminate the cause of the error. If the error persists, replace the CPU Unit.
Flashing	Flashing	A protocol data write error has occurred or protocol data has been destroyed. (Protocol data error: IR 20002) Connector may have become loose or the PC power supply may have turned OFF while transferring protocol data. There is no protocol data. The communications circuit is faulty. (Board Identification Error Flag: IR 20001) A protocol data syntax error has occurred. (Protocol macro error code: 4) A PC Setup error has occurred. (PC Setup Error Flags: IR 20013 to IR 20015)	If the indicator status remains the same when the protocol data is retransmitted, replace the Serial Communications Board. Transfer protocol data to the Serial Communications Board. Conduct a loopback test. If an error occurs, replace the Serial Communications Board. Correct the protocol data and transfer it to the Serial Communications Board. Try executing a normal sequence for the serial port where the error is occurring or switch the CPU Unit to PROGRAM mode and remove the cause of the error. Correct the PC Setup settings.

Serial Communications Board Error Information

For Serial Communications Boards, refer to the following error flags. When an error occurs, the corresponding flag is turned ON. All of these flags represent non-fatal errors.

Word	Bit	Name	Probable cause	Possible remedy
IR 200	00	Serial Communications Board Hardware Error Flag	The Board has failed.	Secure the Board firmly in the slot or try it in a different CPU Unit. If the problem persists, replace the Board.
	01	Port Identification Error Flag (hardware error)	There is a problem with the communications port.	Replace the Board.
	02	Protocol Data Error Flag	A checksum error was found in the protocol data.	Retransfer the protocol data. If the problem persists, replace the Board.
	12/11	Protocol Macro Execution Error Flag (Port 1/2)	An error occurred when the PMCR instruction was executed.	Take countermeasures according to the error codes stored in bits 08 to 11 (port 1) or bits 12 to 15 (port 2) in word 204.
	15	PC Setup Error Flag	There is an error in the settings in the PC Setup.	Check the settings for the Board in the PC Setup and restart the Board.
	14	Port 1 PC Setup Error Flag	Error in settings for port12.	
	13	Port 2 PC Setup Error Flag	Error in settings for port 2.	
SR 254	15	Slot 1 Inner Board Error Flag	Turns ON when an error occurs in the slot 1 Inner Board. The error code for slot 1 is stored in AR 0400 to AR 0407.	See remedies for AR 04.
AR 04	00 to 07	Slot 1 Inner Board Error Code		
		01: Hardware error	The Board has failed (watchdog timer error). IR 20000 will also be ON.	Secure the Board firmly in the slot or try it in a different CPU Unit. If the problem persists, replace the Board.
		02: Hardware error	The Board has failed.	
		10: Serial Communications Board error	Refer to the errors in IR 200.	See remedies for IR 20000, IR 20001, IR 20002, IR 20011, IR20012, and IR 20015.

When a fatal error occurs, the ERR/ALM indicator on the CPU Unit will light. When a non-fatal error occurs, the ERR/ALM indicator on the CPU Unit will flash. Refer to the indicator error displays.

Note The ERR/ALM indicator will continue to flash even after the cause of a non-fatal error has been removed for the Serial Communications Board. The indicator can be stopped by clearing the error from a Programming Console or other Programming Device. Press the FUN Key and then the MONITOR Key from the Programming Console. Refer to the *CX-Programmer Operation Manual* for the CX-Programmer procedure.

9-2 Troubleshooting

This section describes how to resolve transmission and reception problems.

9-2-1 Host Link Communications

Serial communications mode	Indicator status	Status information, etc.	I/O memory	Cause	Remedy
Serial communications mode is not set to Host Link.	---	---	Bits 12 to 15 (Serial Communications Mode) of DM 6555/ DM 6550 are set to a value other than 0 Hex.	Serial communications mode is not set correctly.	Set bits 12 to 15 of DM 6555/DM 6550 to 0 Hex. (Host Link).
Serial communications mode is set to Host Link.	The COMM□ indicators do not flash at all. (Communications have not been electrically established.)	---	---	Cables are incorrectly connected. The RS-422A/485 port setting (2-wire or 4-wire) is incorrect (WIRE). Adapters such as the NT-AL001-E are incorrectly wired or set.	Check the wiring. Reset the port to the correct wiring setting. Wire all nodes using the 4-wire method.
				Commands are not being set from the host.	Reset the serial communications port at the host, and rewrite the program.
				There is a hardware error.	Replace the Serial Communications Board.
	The COMM□ indicators are flashing, but the response has not been returned to the host. (Communications have been electrically established.)	There is no transmission error.	IR 20100 to IR 20103 or IR 20108 to IR 20177 are 0 Hex.	The PC Setup settings for the Host Link unit No., Host Link transmission delay, or other settings do not match the settings for the remote device. The command format and data length of the data sent from the host are incorrect.	Reset the settings in the PC Setup for the Host Link unit No., Host Link transmission delay and other settings so that they match the settings at the host device. Correct the command frame (header, Host Link Unit No., terminator, etc.) and the program.
			---	Cables are incorrectly connected. The RS-422A/485 port setting (2-wire or 4-wire) is incorrect (WIRE). Adapters such as the NT-AL001-E are incorrectly wired or set.	Check the wiring and switch settings, and correct if necessary.
			---	This is a transmission circuit hardware error.	Conduct a loopback test in serial communications mode to check the transmission lines. If an error occurs during the test, replace the Serial Communications Board.
				The send delay time setting is too long.	Reset the parameters in the PC Setup correctly.

Serial communications mode	Indicator status	Status information, etc.	I/O memory	Cause	Remedy
Serial communications mode is set to Host Link. (Continued)	The COMM□ indicators are flashing, but the response has not been returned to the host.	There is a transmission error.	The error code in IR 20100 to IR 20103 for port 1 or IR 20108 to IR 20111 for port 2 is 1 (parity error), 2 (framing error), or 3 (overrun error).	The communications conditions and baud rate do not match the settings at the host.	Review the PC Setup, the host's settings, and program (such as commands and frame format) based on the response and the error code.
				There is noise interference.	Use shielded twisted-pair cables. Lay power lines separately using ducts. Review the installation environment to reduce noise interference.
	The COMM□ indicators are flashing, and an error response has returned to the host.	There is no transmission error.	IR 20100 to IR 20103 or IR 20108 to IR 20111 are 0 Hex.	A command was sent from the host with incorrect parameters.	Review the host's settings and program (such as parameter settings) based on the response contents.
		There is a transmission error.	The error code in IR 20100 to IR 20103 for port 1 or IR 20108 to IR 20111 for port 2 is 1 (parity error), 2 (framing error), or 3 (overrun error).	The communications conditions and baud rate do not match the settings at the host.	Review the PC Setup, the host's settings and program (such as commands and frame format) based on the response, and the error code in IR 20100 to IR 20103 or IR 20108 to IR 20111.
	The COMM□ indicators are flashing, but sometimes there is no response returned.	There is an intermittent transmission error.	The error code in IR 20100 to IR 20103 for port 1 or IR 20108 to IR 20111 for port 2 is 1 (parity error), 2 (framing error), or 3 (overrun error).	The baud rate is outside the allowable range, and the stop bits do not match, causing the bits to be out of alignment.	Review the PC Setup. Review the host's settings and program (such as baud rate and frame format).
			Terminating resistance switch (TERM) status	Cables are incorrectly connected. The RS-422A/485 port 2-wire/4-wire terminating resistance setting is incorrect. Adapters such as the NT-AL001-E are incorrectly wired or the terminating resistance is incorrectly set.	Check the wiring. Turn ON the terminating resistance of the Serial Communications Board and the last node by using the terminating resistance switch. Turn OFF the terminating resistance of other nodes.
			The error code in IR 20100 to IR 20103 for port 1 or IR 20108 to IR 20111 for port 2 is not 0.	Transmission errors are occurring that are caused by noise interference.	Use shielded twisted-pair cables. Lay power lines separately using ducts. Review the installation environment to reduce noise interference.

Serial communications mode	Indicator status	Status information, etc.	I/O memory	Cause	Remedy
Host Link, slave-initiated communications	The COMM□ indicators are flashing, but there is no response from the host.	A transmission error has not been detected at the host.	---	There is a hardware error in the reception circuit.	Conduct a loopback test in serial communications mode to check the transmission lines. If an error occurs during the test, replace the Serial Communications Board.
			---	Cables are incorrectly wired.	Check the wiring and correct.
			---	There is a hardware error in the reception circuit. Adapters such as the NT-AL001-E are incorrectly wired or set.	Conduct a loopback test in serial communications mode to check the transmission lines. If an error occurs during the test, replace the Serial Communications Board.
			---	---	Check the program at the host. When unsolicited communications are used with Host Link mode, there must be a response returned from the host for every command sent from the Serial Communications Board.
			Communications parameters and baud rate settings in the PC Setup do not correspond with the settings at the host.	The communications conditions and baud rate do not match the settings at the host.	Reset the parameters in the PC Setup and at the host correctly.

9-2-2 Protocol Macros

Serial communications mode	Indicator display	Status information, etc.	I/O memory	Cause	Remedy
Serial communications mode is not set to protocol macro.	---	---	Bits 12 to 15 (Serial Communications Mode) of DM 6555/ DM 6550 are set to a value other than 6 Hex.	Serial communications mode is not set correctly.	Set bits 12 to 15 of DM 6555/DM 6550 to 6 Hex. (protocol macros).
Serial communications mode is set to protocol macro.	The COMM□ indicators do not flash at all. (Communications has not been electrically established.)	The PMCR(—) instruction was executed, but IR 20708 or IR 20712 (Protocol Macro Executing Flag) did not turn ON.	IR 20708 or IR 20712 (Protocol Macro Executing Flag) is set as a NO execution condition for PMCR(—).	The program is incorrect.	Set IR 20708 or IR 20712 (Protocol Macro Executing Flag) as a NC execution condition for PMCR(—).
			The Error Flag (SR 25503) is ON.	The problem cause is one of the following: – The data range for the PMCR(—) instruction C operand is incorrect. – The number of data words in the S or D operand exceeds 129.	Check the PMCR(—) instruction C, S, and D operand settings for errors.
			The error code in IR 20408 to IR 20411 or IR 20412 to IR 20415 is 2 Hex (Sequence Number Error).	The sequence number specified in bits 00 to 11 of the PMCR(—) instruction C operand is a value other than 000 Hex to 999 BCD. The specified communications sequence number does not exist in the protocol data.	Set bits 00 to 11 of the PMCR(—) instruction C operand to a value between 000 and 999 BCD. Check whether the communications sequence number is correct.
			The error code in IR 20408 to IR 20411 or IR 20412 to IR 20415 is 3 Hex (Receive Data Write Range Overflow Error)	The data range of the specified area is exceeded when data is being written to or read from the I/O memory of the CPU Unit.	Specify another area, or reduce the size of the data to be sent or received.

Serial communications mode	Indicator display	Status information, etc.	I/O memory	Cause	Remedy
Serial communications mode is set to protocol macro.	The COMM□ indicators do not flash at all. (Communications have not been electrically established.)	The PMCR(—) instruction is executed, but IR 20708 or IR 20712 (Protocol Macro Executing Flag) does not turn ON.	The error code in IR 20408 to IR 20411 or IR 20412 to IR 20415 is 4 Hex (Protocol Data Syntax Error).	The protocol data in the Serial Communications Board is incorrect.	Use CX-Protocol to correct and transfer the protocol data.
		The PMCR (—) instruction is not executed. System error FAL 9C does not occur.	IR 20711 or IR 20715 (Forced Abort Bit) is ON.	---	Release the Forced Abort Bit
		IR 20708 or IR 20712 (Protocol Macro Executing Flag) turns ON when the PMCR(—) instruction is executed, but data cannot be sent or received properly.	Send processing is not executed.	The send wait time specified in communications sequence step units is too long.	Use CX-Protocol to check whether the send wait time is correctly set.
		IR 20708 or IR 20712 (Protocol Macro Executing Flag) momentarily turns ON when the PMCR(—) instruction is executed, but it does not remain ON.	IR 20711 or IR 20715 (Forced Abort Bit) is ON.	Forced Abort Bit is forceset.	Release the Forced Abort Bit
		IR 20708 or IR 20712 (Protocol Macro Executing Flag) remains ON when the PMCR(—) instruction is executed without setting the monitoring time for individual sequences	The sequence is running and does not end (the words allocated in the CIO Area is in receive status).	Protocol macro data is not set correctly. The PC Setup settings such as the baud rate and frame format differ from those of the remote node.	Use CX-Protocol transmission line trace to check whether the protocol data and PC Setup settings are correct.

Serial communications mode	Indicator display	Status information, etc.	I/O memory	Cause	Remedy
Serial communications mode is set to protocol macro. (Continued)	The COMM□ indicators do not flash at all. (Communications have not been electrically established.)	Send data has already been transmitted, but there is no response from the remote node.	The contents of the words allocated in settings in the PC Setup do not match those of the remote node.	The baud rate is outside the allowable range, or there are bit errors due to mismatched stop bits and so on.	Review the PC Setup settings. Review the remote node settings and the program (including the baud rate, frame format, and so on).
			The error code in IR 20100 to IR 20103 for port 1 or IR 20108 to IR 20111 for port 2 is not 0.	The wiring is faulty. The setting of the 2/4-wire switch for the RS-422A/485 port does not match the actual wiring (WIRE). Wiring of adapters (e.g., NT-AL001-E) is faulty.	Check the wiring. Turn ON the terminating resistances of the Serial Communications Board and the last node. Turn OFF the terminating resistances of other nodes.
			---	Hardware failure.	Replace the Serial Communications Board.
	The COMM□ indicators are flashing, but the Serial Communications Board cannot perform communications or a communications error sometimes occurs.	A transmission error occurs.	The error code in IR 20100 to IR 20103 for port 1 or IR 20108 to IR 20111 for port 2 is not 0.	The PC Setup settings such as the baud rate and frame format differ from those of the remote node. The baud rate is outside the allowable range, or there are bit errors due to mismatched stop bits and so on.	Review the PC Setup settings. Review the remote node settings and the program (including the baud rate, frame format, and so on).
			The settings in the PC Setup do not match those of the remote node.		
		Data is received through CX-Protocol transmission line trace, but the protocol macros behave as if no data is received.	---	Because response from the remote node is received too fast, the data received from the time the data send processing was completed until the Send operation was completed is discarded.	Check the settings of the remote node and review programming (i.e., the timing of sending response data).
		The remote node sometimes returns no response to sent data. Response may be received by performing retries.	---	The transmission timing is too fast for the remote node to receive data.	Set or increase the transmission wait time (time to await data transmission) in step units.

Serial communications mode	Indicator display	Status information, etc.	I/O memory	Cause	Remedy
Serial communications mode is set to protocol macro. (Continued)	The COMM□ indicators are flashing, but the Serial Communications Board cannot perform communications or a communications error sometimes occurs.	A transmission error sometimes occurs.	The error code in IR 20100 to IR 20103 for port 1 or IR 20108 to IR 20111 for port 2 is not 0.	The wiring is faulty. The RS-422A/485 port terminating resistance setting is incorrect. Adapters such as the NT-AL001-E are incorrectly wired, or the terminating resistance setting is incorrect.	Check the wiring. Turn ON the terminating resistance of the Serial Communications Board and the last node by using the terminating resistance switch. Turn OFF the terminating resistance of other nodes.
				A communications error frequently occurs due to noise and so on.	Use shielded twisted pair cables. House the communications cables in a different duct from those for power lines and so on. Review the operating environment to prevent noise problems.

Note The following table shows the measures to correct error codes provided in IR 20408 to IR 20411 for port 1 and IR 20412 to IR 20415 for port 2.

Error code	Indicator	Error details	Cause	Remedy
0 Hex	No display	Normal	---	---
1 Hex	No display	The PC Setup settings (DM 6550 to DM 6559) for the Serial Communications Board are in Protocol Macro Mode.	---	Review the The PC Setup settings for the Serial Communications Board in the relevant port.
2 Hex	No display	Sequence number error	The communications sequence number specified in bits 00 to 11 of the PMCR(—) instruction's C operand is not registered.	Correct the communications sequence number. Use CX-Protocol to register the specified communications sequence number.
3 Hex	ERR/ALM: Flashing	Receive data write range overflow error	The data range of the specified area is exceeded when data is being written to or read from the I/O memory of the CPU Unit.	For operand specification: Check the PMCR(—) instruction S and D operand specifications. For direct specification of link words: Use CX-Protocol to check the specified range.

Error code	Indicator	Error details	Cause	Remedy
4 Hex	ERR/ ALM: Flashing	Protocol data syntax error	There is a code that cannot be executed during protocol execution.	Check the following items and correct the problem. • Check whether the total specified number of link words in the area (O1, O2, I1, I2) exceeds 128. • The same area with link word specification is used by both ports 1 and 2. • A write instruction with constant specification is specified. • An EM Area read/write instruction is specified as an interrupt notification. • There are more than 30 write attributes set for one message. • The length of a send/receive message is set to 0 bytes. • The length of a send/receive message is longer than 127 bytes. • No messages are registered for matrix reception. • Both RTS/CTS flow control and Xon/ Xoff flow control are set for the same transmission line.
5 Hex	ERR/ ALM: Flashing	Protocol macro execution error during port initialization	The PMCR instruction was executed while the port was being initialized.	Check if the PMCR instruction was executed during any one of the following processes. • While the serial communications port was being restarted. • While the serial communications mode in the PC system setup of the Serial Communications Board was being modified using the STUP instruction. • While the serial communications mode in the PC system setup of the Serial Communications Board was being modified using the Programming Device.

9-2-3 1:N NT Link Mode

Serial communications mode	Indicator display	Status information, etc.	I/O memory	Cause	Remedy
Serial communications mode is not set to NT Link.	---	---	Bits 12 to 15 (Serial Communications Mode) of DM 6555/ DM 6550 are set to a value other than 5 Hex.	Serial communications mode is not set correctly.	Set bits 12 to 15 (Serial Communications Mode) of DM 6555/ DM 6550 to 5 Hex.
Serial communications mode is set to NT Link.	The COMM□ indicators do not flash at all. (Communications have not been electrically established.)	---	---	There is a hardware error.	Conduct a loopback test in serial communications mode to check the transmission lines. If an error occurs during the test, replace the Serial Communications Board.
	The SD and COMM□ indicators are flashing, but the Serial Communications Board cannot communicate with the Programmable Terminal (PT).	---	---	There is a setting error for the PT serial port.	Correct the PT serial port settings.
				The I:N NT Link unit number of the PT is incorrect. The same 1:N NT Link unit number has been set for more than one PT	Review the NT Link unit number of the PT.
				The maximum allowable NT Link unit number is incorrectly set for the system.	Review the PC Setup settings.
				Cables are incorrectly connected. The RS-422A/485 port setting (2-wire or 4-wire) is incorrect. Adapters such as the NT-AL001-E are incorrectly wired or set.	Review the wiring or switch settings.
				A communications error frequently occurs due to noise, etc.	Review the wiring and installation environment.
				There is a PT hardware error.	Replace the PT.

Serial communications mode	Indicator display	Status information, etc.	I/O memory	Cause	Remedy
Serial communications mode is set to NT Link.	The COMM□ indicators are flashing, but a communications error sometimes occurs in the PT.	---	---	Cables are incorrectly connected. The RS-422A/485 port setting (2-wire or 4-wire) is incorrect. Adapters such as the NT-AL001-E are incorrectly wired or set.	Review the wiring or switch settings. Check whether the terminating resistances of the host computer and the last node are set to ON, and the terminating resistances of other nodes are set to OFF.
				A communications error frequently occurs due to noise, etc.	Review the wiring and installation environment. Increase the number of retries for the PT as required.
				The communications monitoring time for the PT is insufficient.	Increase the communications monitoring time for the PT.
				The load on the PC is too high.	Lighten the load on the PC. Reduce the number of PTs connected to each serial port by using other ports for some of the PTs. Adjust the timeout and retry settings in the PT.

Note The PT serial port must be set for a 1:N NT Link. The PT will not be able to communicate with a Serial Communications Board if the PT is set for a 1:1 NT Link.

9-3 Cleaning and Inspection

Use the cleaning and inspection methods described here for daily maintenance of the devices.

9-3-1 Cleaning

To keep the Serial Communications Board in optimum condition, regularly clean the Serial Communications Board as follows:

- Wipe the surface of the Serial Communications Board daily with a soft, dry cloth.
- If any dirt cannot be removed with a dry cloth, moisten the cloth with a mild detergent diluted to 2%, and squeeze out any excess moisture before wiping the Serial Communications Board.
- Do not adhere materials, such as gum, vinyl, or tape to the Serial Communications Board for long periods of time. Doing so may cause stains on the device. Remove any adhered materials when cleaning the Serial Communications Board.

Note Never use benzene, paint thinner, or other volatile solvents, and do not use chemically treated cloths.

9-3-2 Inspection

To keep the Serial Communications Board in optimum condition, regular inspections must be performed. Normally, inspect the devices once every six months or every year. Inspect the devices at more regular intervals when they are being used in environments subject to high temperatures, high humidity, or high dust levels.

Materials for Inspection

Prepare the following materials before performing any inspections.

Materials Required Daily

For daily inspection, a Phillips screwdriver, flat-blade screwdriver, tester (or digital voltmeter), industrial strength alcohol, and all-cotton cloth are required.

Materials Required Occasionally

For some inspections, a synchroscope, a pen oscilloscope, a temperature gauge, and a hygrometer will be required.

Inspection Items

Inspect the following items to check whether the Serial Communications Board is operating within the specified criterion. If the Serial Communications Board is not within the criterion, improve the ambient operating environment and readjust the device.

Item	Details	Criterion	Inspection materials
Operating environment	Check the ambient temperature and the temperature inside the control panel.	0 to 55°C	Temperature gauge
	Check the ambient humidify and the humidity inside the control panel.	10% to 90% RH (no condensation or icing)	Hygrometer
	Check for accumulated dust.	No dust	Visual inspection
Installation	Check that the Serial Communications Board is mounted securely.	Board must be mounted securely.	---
	Check for loose screws on the communications cables.	Screws must be securely tightened.	Phillips screwdriver
	Check for damaged communications cables.	Cables should be fully intact.	Visual inspection

9-4 Board Replacement

A malfunction of the Serial Communications Board may affect the operation of remote communications devices, so be sure to perform repairs or replace the faulty Board promptly. Make sure a spare Serial Communications Board is available to replace a faulty one, so that functionality can be restored without delay.

9-4-1 Precautions

Observe the following precautions when replacing the Serial Communications Board.

- Always turn OFF the power to the PC before replacing the Serial Communications Board.
- Be sure to check that the Serial Communications Board replacing the faulty one is not defective.
- If the defective Serial Communications Board is to be dispatched to the manufacturer for repair, be sure to include documentation stating the nature of the fault in as much detail as possible, and send to your nearest OMRON branch or sales office, listed at the back of this manual.

If the contacts are defective, clean the contacts with a clean all-cotton cloth moistened with industrial-strength alcohol. Remove any cloth particles before mounting the Serial Communications Board.

Note Turn OFF the power to all serial external devices when replacing the Serial Communications Board to prevent malfunctions.

9-4-2 Settings after Replacing the Board

After replacing the Serial Communications Board, make sure that wiring and settings, such as hardware switch settings, the settings for the Serial Communications Board in the PC Setup, and protocol macro data are the same as the Serial Communications Board that was replaced.

Note

1. If the CPU Unit is to be replaced, transfer to the replacement CPU Unit the contents of the Holding Areas and DM Area required for operation before starting operation. If the relationship between the DM Area and Holding Area and the program is not maintained, unexpected malfunctions may result.
2. The PC Setup of the Serial Communications Board is saved in the DM Area of the CPU Unit. If the CPU Unit is to be replaced, either transfer the PC Setup data to the CX-Programmer or CX-Protocol before replacing the CPU Unit or reset the PC Setup.

9-4-3 Replacement Procedure

Standard System Protocols, Host Link Communications, No-protocol Communications, 1:1 Data Links, or NT Links

1,2,3...

1. Turn OFF the power to the PC to which the Serial Communications Board to be replaced is mounted, and to all serially connected external devices.
2. Disconnect the communications cables connected to the Serial Communications Board to be replaced, and also remove the Serial Communications Board.
3. Set the hardware switches of the replacement Board to the same settings of the Serial Communications Board being replaced before mounting, as follows:

- Terminating resistance switch (TERM)
- The 2/4-wire switch (WIRE)

4. Turn ON the power of the PC to which the replacement Serial Communications Board is mounted, and to all serially connected external devices, and start operating the system.
5. Check from the indicators and status display that the system is operating normally.

Protocol Macros Designed with CX-Protocol

1,2,3...

1. Connect Programming Console or CX-Protocol to the PC to which the replacement Serial Communications Board is mounted, and switch to PROGRAM mode.
2. Save the protocol macro data using the CX-Protocol. Refer to the *CX-Protocol Operation Manual (W344)* for details.
3. Turn OFF the power to the PC to which the Serial Communications Board to be replaced is mounted, and to all serially connected external devices.
4. Disconnect the communications cables connected to the Serial Communications Board to be replaced, and also remove the Serial Communications Board.
5. Set the hardware switches of the replacement Board to the same settings of the Serial Communications Board being replaced before mounting, as follows:
   - Terminating resistance switch (TERM)
   - The 2/4-wire switch (WIRE)
6. Turn ON the power of the PC to which the replacement Serial Communications Board is mounted, and to all serially connected external devices, and start operating the system.
7. Switch the CPU Unit to PROGRAM mode, and using the CX-Protocol, transfer the protocol macro data to the Serial Communications Board.
8. Switch the CPU Unit to MONITOR mode, and start operating the system.
9. Check from the indicators and status display that the system is operating normally.

Note

1. The protocol macro data for the Serial Communications Board is stored in the flash memory of the Serial Communications Board.
2. When protocol macro data designed with the CX-Protocol is used, a back-up of the protocol macro data created from the CX-Protocol must be transferred to the Serial Communications Board after replacing.
3. The PC Setup of the Serial Communications Board is allocated to the DM Area saved in the battery backup of the CPU Unit, and if the user-designed macro data is not used, the PC Setup can be used as before, simply by setting the hardware.

Appendix A
Introduction

Appendices B to N provide information on the standard system protocols provided with the CX-Protocol, the Serial Communications Boards. Refer to *5-7 Using Protocol Macros* for details on using PMCR(—).

Using Standard System Protocols

Standard system protocols can be executed merely by specifying the sequences number to be executed in the second operand of PMCR(—) and settings the data described in the appendices in the proper format starting at the word specified with the third operand of PMCR(—). The data received as a response to executing the sequence will be automatically stored starting at the word specified with the fourth operand of PMCR(—).

Procedure

1,2,3...

1. Set the port number (1 or 2) and the sequence number as BCD values in the first operand of PMCR(—).
2. Specify the address of the first word containing the data required for the sequence as the second operand (S: First word of send data) of PMCR(—).
3. Specify the address of the first word where respond data is to be stored as the third operand (D: First receive data storage word) of PMCR(—). Unless there is a reason to specify otherwise, set 0000 Hex in D at the initial value.

Example

The following data would be used to execute sequence number 600 in the CompoWay/F Master Protocol for a transmission with ASCII conversion.

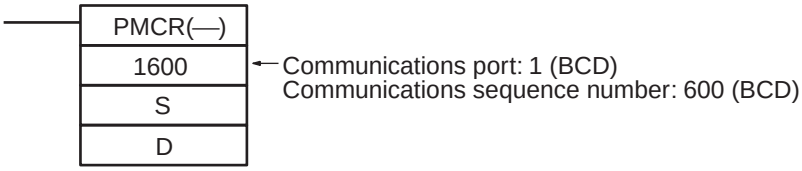

S: Send Data Word Allocation (3rd Operand)

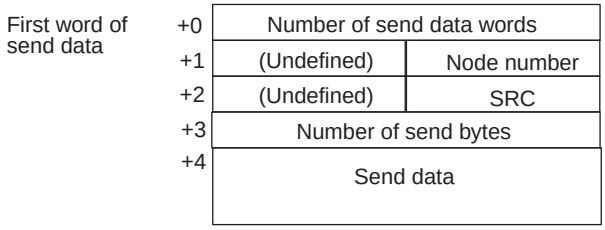

Offset	Contents (data format)		Data
S+0	Number of send data words (4 digits BCD)		0005 to 0128 BCD
S+1	(Undefined)	Node No. (2 digits BCD)	00 to 99
S+2	MRC (2 digits Hex)	SRC (2 digits Hex)	Set the command code for the required service
S+3	Number of send bytes (4 digits BCD)		Number of data bytes from the next byte after the command code until the byte just before the ETX. 0000 to 0492
S+4 on	Send data (4-digit Hex)		The data specified in hexadecimal here will be converted to ASCII and the number of bytes specified in S+3 will be sent.

D: Receive Data Word Allocation (4th Operand)

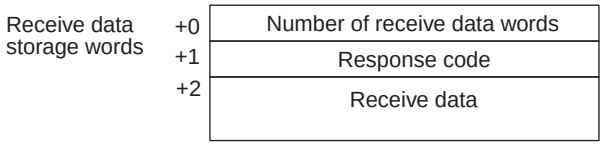

Offset	Contents (data format)	Data
D+0	Number of receive data words (4 digits BCD)	0003 to 0128 BCD
D+1	Response code (4 digits Hex)	The response code will be stored in hexadecimal form.
D+2 on	Receive data (4-digit Hex)	The data from just after the response code until just before the ETX will be converted from ASCII to hexadecimal and stored here.

Standard System Protocols

The following 13 standard system protocols are provided with the CX-Protocol and the Serial Communications Boards.

Protocol name	Function
CompoWay/F Master	Protocol for sending CompoWay/F commands as a Master to OMRON CompoWay/F slave components and receiving responses.
E5□K Digital Controller Read	Protocol for controlling an E5□K Digital Controller via the Board. Procedures for reading the MV the operating parameter settings
E5□K Digital Controller Write	Protocol for controlling an E5□K Digital Controller via the Board. Procedures for writing set points and operating parameters.
E5ZE Temperature Controller Read	Protocol for controlling an E5ZE Temperature Controller via the Board. Procedures for reading measured temperature and operating parameter settings.
E5ZE Temperature Controller Write	Protocol for controlling an E5ZE Temperature Controller via the Board. Procedures for writing control temperatures and operating parameters.
E5□J Temperature Controller	Protocol for controlling a E5□J Temperature Controller via the Board. Procedures for writing set points, reading output amounts, and reading/writing operating parameters.
ES100□ Controller	Protocol for controlling an ES100□ Controller via the Board. Procedures for writing adjustment parameters, reading operation amounts, and writing/reading operating parameters.
Intelligent Signal Processor	Protocol for controlling a Intelligent Signal Processor via the Board. Procedures for writing comparison values and reading display values are set.
V500/V520 Bar Code Reader	Protocol for controlling a Bar Code Reader via the Board. Procedures for controlling the Bar Code Reader in remote mode, reading the data that has been read by the Bar Code Reader, and reading/writing operating parameters.
3Z4L Laser Micrometer	Protocol for controlling a Laser Micrometer via the Board. Procedures for controlling the Laser Micrometer in remote mode, reading measured data, and writing/reading operating parameters.
F200/F300/F350 Visual Inspection Systems	Protocol for controlling a Visual Inspection System via the Board. Procedures for controlling the Visual Inspection System in remote mode, reading measured values, and writing/reading operating parameters.
V600/V620 ID Controllers	Protocol for controlling an ID Controller via the Board. Procedures for performing Read/Write operations of the ID Controller and writing/reading operating parameters.
Hayes modem AT commands	Protocol for controlling a Hayes modem (AT commands) via the Board. Procedures for initialization of the modem, dialing, data transmission, switching to escape mode, and disconnecting the line.

Note Some of the standard system protocols do not allow communications with 32 nodes for one execution of a sequence (for 1:N connections). For example, it's not possible when the number of Units in send data is 1 to 25 for unit numbers 00 to 31 (e.g., in the temperature controller read sequences). This restriction is due to a limit in the number of words that can be transferred between the CPU Unit and the Serial Communications Board. These sequences, however, allow the unit numbers of connected devices to be specified in the send data. You can thus set different unit numbers in the send data and execute PMCR(—) for the same sequence as many times as required for all unit numbers.

Appendix B
CompoWay/F Master Protocol

The CompoWay/F Master Protocol is used to send CompoWay/F commands with the CS1-series PC serving as the host (master).

CompoWay/F

CompoWay/F is a protocol used by many OMRON components for serial communications. A host computer of a PC can function as a host (master) to send CompoWay/F commands (message frames) to OMRON components, which function as slaves. The components will return responses to these commands. Using CompoWay/F commands, the host can read/write data, settings, and operating status to control the operation of the components.

CompoWay/F has the following features.

- The same message frame format is used, eliminating the need for special protocols for each component. The same commands can thus be used for serial communications with all CompoWay/F components.
- The CompoWay/F protocol conforms to OMRON's standard FINS command protocol, providing compatibility with other networks and more flexible expansions in the future.

The CompoWay/F Master Protocol is provided as a standard system protocol to enable the CQM1H-series PC to executed read/write sequences for CompoWay/F commands.

System Configuration for Standard System Protocol

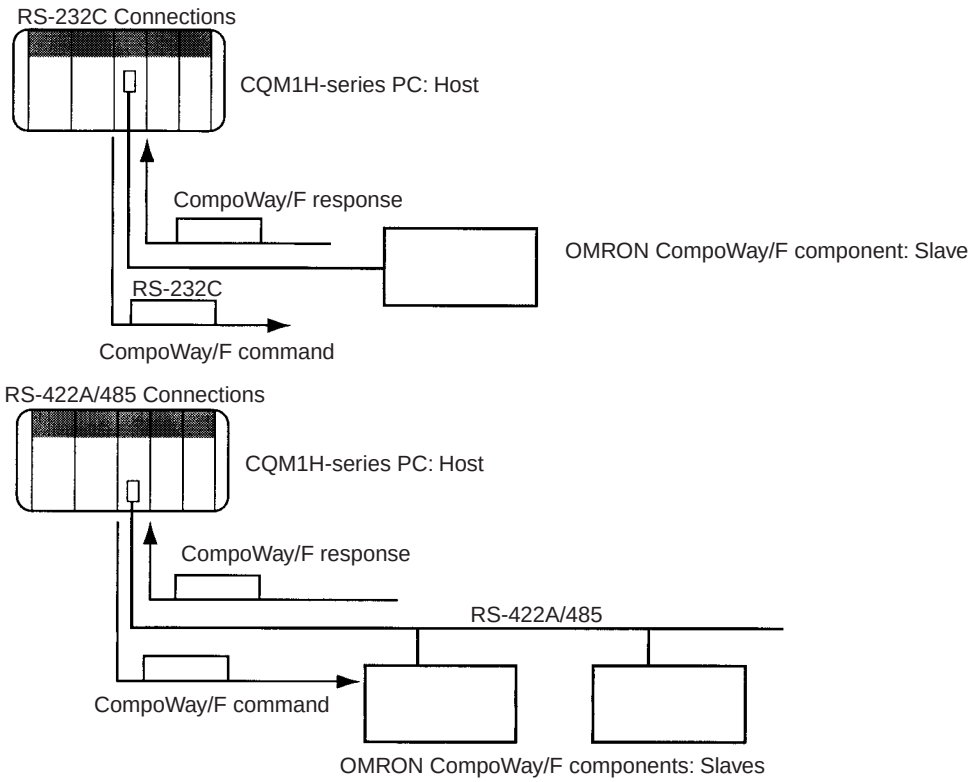

Communications Specifications

Item	Specification
Transmission path connections	Multipoint
Communications	RS-232C, RS-422A/485, 4-wire half-duplex, 2-wire half-duplex
Synchronization	Start-stop
Baud rate	1,200/2,400/4,800/9,600/19,200 bps Default: 9,600 bps
Transmitted code	ASCII
Data length	7 bits or 8 bits (Default: 7 bits) **Note** A 7-bit code is used with 0 added to the beginning.
Stop bits	1 bit or 2 bits (Default: 2 bits)
Error detection	Horizontal parity (none, even, or odd) (Default: Even) BCC (block check character) *1: Start-stop Sync Data Configuration for Protocol Macros LRC, 1 byte, equivalent to binary

Transmission Procedure

The PC or host computer serving as the master sends a command and the component serving as the slave returns a response for the command message contained in the command. One response message is returned for each command message. The movement of command and response messages is shown below.

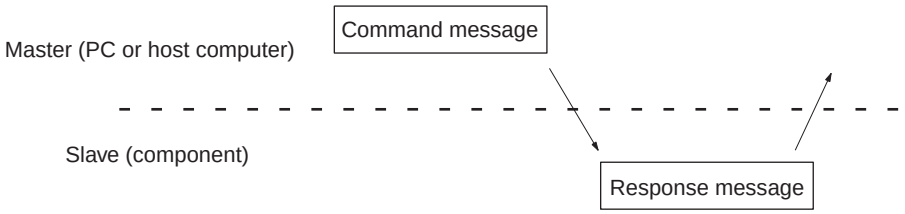

Command and Response Formats

Note In the following diagrams “Hex” indicates hexadecimal values. Values in quotation marks, such as “00” indicate ASCII characters.

Command Format

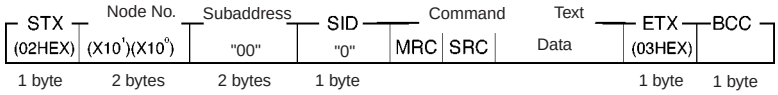

Response Format



Note 1. Data is not saved in the response if there is a command frame error (i.e., if the end code is not 00 or 0F).

2. Other values are possible for the subaddress and SID.

Command Frame Contents

Item		Meaning
STX		A code, 02 Hex, indicating the beginning of a communications frame (text). This code must always be set as the first byte.
Node number		The node number identifies the source of the command frame. Specify “XX” to broadcast a transmission. There will be no response made to a broadcast.
Subaddress		Set “00” for most components. Other values must be set for special components.
SID		Set “0” for most components. Other values must be set for special components.
Command and text		The command and required text are placed here. Refer to the command codes and text for individual sequences.
	MRC and SRC	The command code specifies the service being used. Refer to the command codes and text for individual sequences.
ETX		A code, 03 Hex, indicating the end of text.
BCC		The block check character (horizontal parity, 1 byte). The character is an exclusive OR of all data from just after the STX to the ETX.

Response Frame Contents

Item		Meaning
STX		A code, 02 Hex, indicating the beginning of a communications frame (text). This code must always be set as the first byte.
Node number		The node number identifies the source of the command frame. “XX” is specified to broadcast a transmission. There will be no response made to a broadcast.
Subaddress		“00” for most components. Other values must be set for special components.
SID		“0” for most components. Other values must be set for special components.
End code (See note.)		The results of executing the command frame. **Note:** The response code (MRES and SRES) indicates the results for the command code; the end code indicates the results for the command frame. These are not the same.
Response and text		The response and requested text are placed here. Refer to the response and text for individual sequences.
	MRES and SRES	The response code specifies the results of processing the service requested by the command code. Refer to the response codes and text for individual sequences.
ETX		A code, 03 Hex, indicating the end of text.
BCC		The block check character (horizontal parity, 1 byte). The character is an exclusive OR of all data from just after the STX to the ETX.

Note The end codes are described in the following table.

End code	Name	Meaning
“00”	Normal end	The command frame was processed normally without any of the following errors.
“0F”	Command error	The specified command could not be executed. Refer to the response code for more information.
“10”	Parity error	A parity error was detected for one of the characters that was received.
“11”	Framing error	A framing error was detected for one of the characters that was received.
“12”	Overrun error	A overrun error was detected for one of the characters that was received.
“13”	BCC error	The BCC for the receive frame was incorrect.
“14”	Format error	An illegal command or illegal character was received in the command and text (characters other than ASCII 0 to 9 or A to F).
“16”	Subaddress error	The receive frame contained an illegal subaddress.
“18”	Frame length error	The receive frame was too long.

Example

The command and response frames for a K3N□-series Intelligent Signal Processor are shown below.

Command Frame

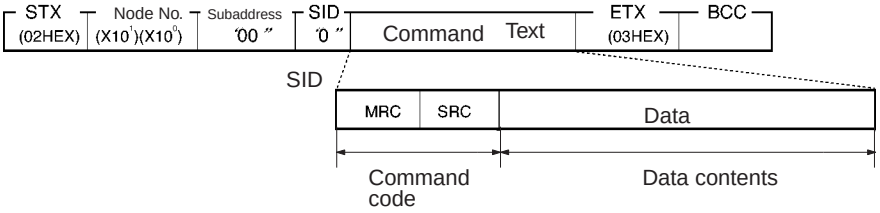

Command	Command code		Data contents				
VARIABLE AREA READ	“01”	“01”	Variable type	Address	“00”	No. of elements	
VARIABLE AREA WRITE	“01”	“02”	Variable type	Address	“00”	No. of elements	Write data
PARAMETER AREA READ	“02”	“01”	Parameter type	Address	No. of elements		Write data
PARAMETER AREA WRITE	“02”	“02”	Parameter type	Address	No. of elements		
PROCESSOR STATUS READ	“05”	“03”					
CONTROLLER STATUS READ	“06”	“01”					
ECHOBACK TEST	“08”	“01”	Text data				
OPERATION COMMAND	“30”	“05”	Command code				

Response Format

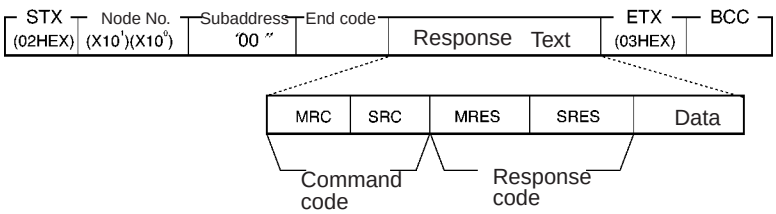

Example: VARIABLE AREA READ

The following command and text are used to read the present value, maximum value, minimum value, and status of the Intelligent Signal Processor.

Command and Text

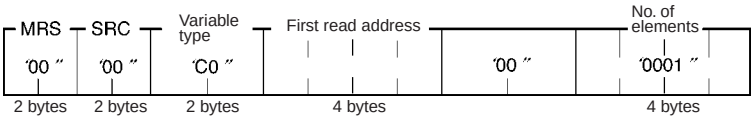

1,2,3...

1. Variable Type

Variable type	Contents
"C0"	Present value, maximum value, minimum value, status, and comparison value

2. First Read Address
   Specify the address of the data to be read in 4 digits Hex.
3. Number of Elements: 4 Digits Hex

Number of elements	Process
"0001"	Read the data and end normally.

Note If "0000" is specified, nothing will be read and a normal end will be returned. A parameter error will occur for any settings other than "0000" and "0001."

Response Text

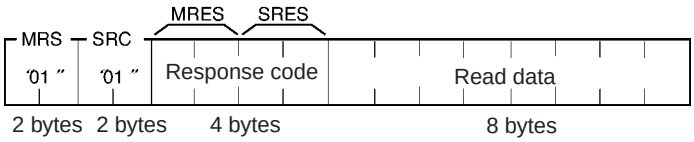

1,2,3...

1. Response Code: MRES, SRES

Response code	Meaning
"0000"	Normal end
"1001"	Command too long
"1002"	Command too short
"1100"	Parameter error
"1101"	Area type error
"1103"	First address range error
"2203"	Operating error

2. Read Data
   The specified data is returned in 8 digits of hexadecimal data.

CompoWay/F Master Protocol Sequences

The CompoWay/F Master Protocol provides six communications sequences that can be used for the following:

- Converting to ASCII data or not converting to ASCII data
- Sending to a specified Unit or broadcasting
- Specifying from the command code or specifying from the subaddress and SID.

Structure of the Protocol

The following table shows the structure of the CompoWay/F Master Protocol.

Sequence No.	Communications sequence name	Function	Ladder interface	
			Send word allocation	Receive word allocation
600	Send with ASCII conversion, with response	Converts the specified data beginning with the command code to ASCII and sends it to the specified Unit. The response is converted to hexadecimal and stored starting at the specified word.	Yes	Yes
601	Broadcast with ASCII conversion, no response	A broadcast version of sequence No. 600. No responses are received.	Yes	No
602	Send with no conversion and with response	Sends specified data beginning with the command code to the specified Unit. The response is stored starting at the specified word. This is the same as sequence No. 600 without data conversion and can be used when conversion is not required.	Yes	Yes
603	Broadcast with no conversion and no response	A broadcast version of sequence No. 602. No responses are received.	Yes	No
604	General-purpose send with no conversion and with response	Sends specified data beginning with the subaddress and SID to the specified Unit. The response is stored starting at the specified word. This sequence can be used whenever it is necessary to specify the subaddress or SID.	Yes	Yes
605	General-purpose broadcast with no conversion and no response	A broadcast version of sequence No. 604. No responses are received.	Yes	No

Sequence No. 600 can be used for the normal CompoWay/F Master function (ASCII conversion, specification from command code).

Refer to the communications specifications for the OMRON CompoWay/F component to which the command is being sent and set the command code and required data starting at the words specified for the 3rd operand of PMCR(260).

The relationship between the CompoWay/F command and response frames and the operands of PMCR(260) is described next.

CompoWay/F Message Frames and PMCR(260) Operands

The relationship between the CompoWay/F command and response frames and the operands of PMCR(260) is shown below, using communications sequence No. 600 as an example.

Command Frame

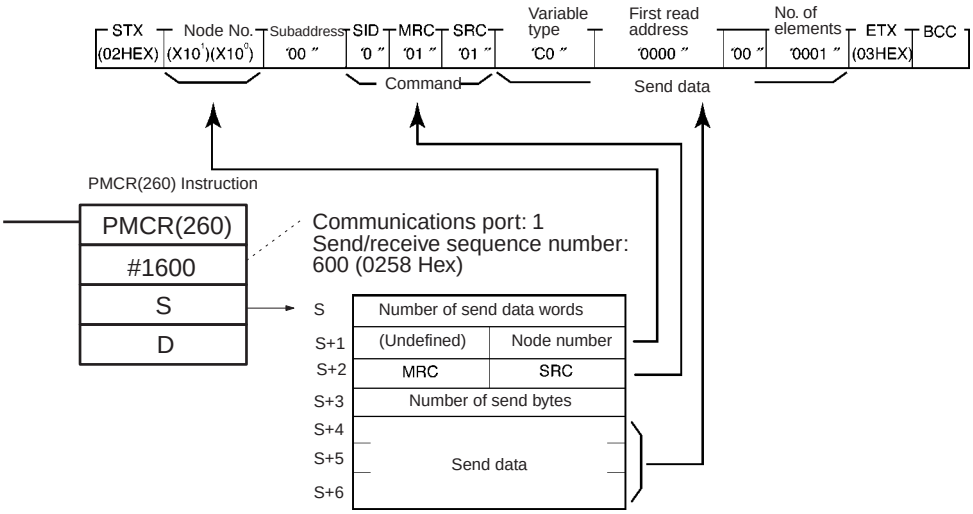

Response Frame

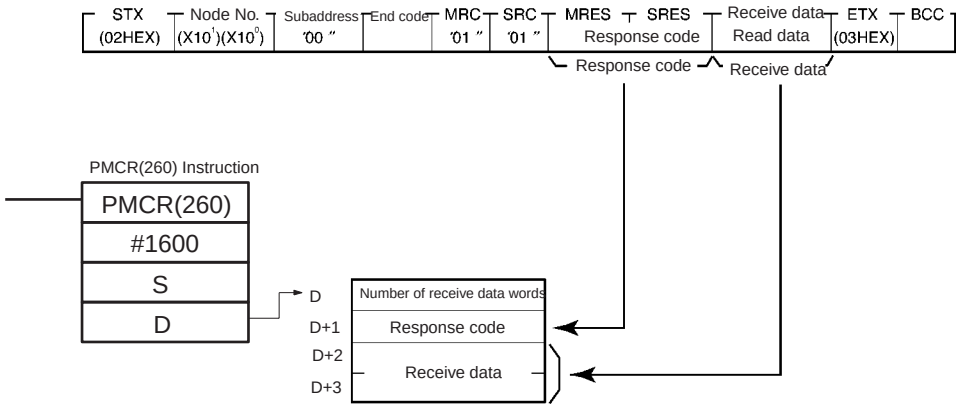

Send with ASCII Conversion, with Response: (Sequence No. 600)

This sequence converts the specified data beginning with the command code to ASCII and sends it to the specified Unit. The response is converted to hexadecimal and stored starting at the specified word.

Send Data Word Allocation (2nd Operand of PMCR(260))

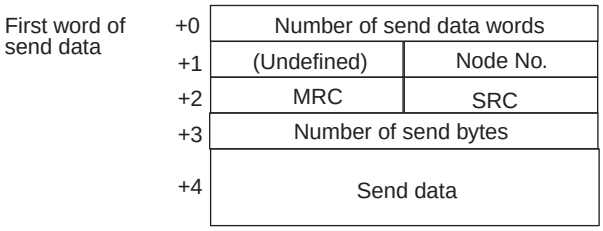

Offset	Contents (data format)		Data
+0	Number of send data words (4 digits BCD)		0005 to 0128
+1	(Undefined)	Node No. (2 digits BCD)	00 to 99
+2	MRC (2 digits Hex)	SRC (2 digits Hex)	Set the command code for the required service
+3	Number of send bytes (4 digits BCD)		Number of data bytes from the next byte after the command code until the byte just before the ETX. 0 to 984 decimal
+4 on	Send data (4-digit Hex)		The data specified in hexadecimal here will be converted to ASCII and the number of bytes specified in S+3 will be sent.

Note 1. Set the number of send bytes to twice the number of bytes in memory. This is necessary because the data is converted to ASCII data before being sent.

2. When hexadecimal data is converted to ASCII data, data is sent starting from the send data word with the largest offset. This is done because ladder programming handles data in 4-byte units.

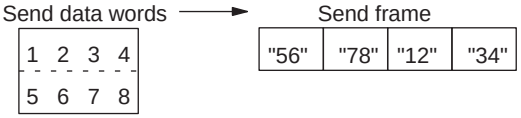

Receive Data Word Allocation (3rd Operand of PMCR(260))

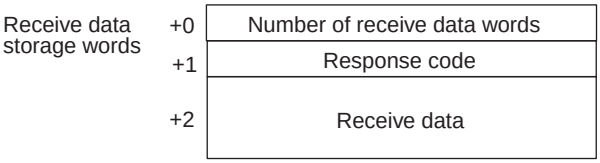

Offset	Contents (data format)	Data
+0	Number of receive data words (4 digits BCD)	0003 to 0128
+1	Response code (4 digits Hex)	The response code will be stored in hexadecimal form.
+2 on	Receive data (4-digit Hex)	The data from just after the response code until just before the ETX will be converted from ASCII to hexadecimal and stored here.

Note When ASCII data is converted to hexadecimal data, data is stored starting from the receive data word with the largest offset. This is done because ladder programming handles data in 4-byte units.

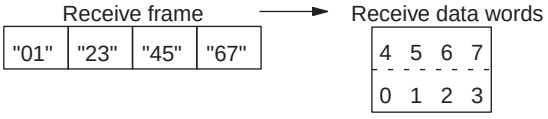

Example: The following example illustrates reading the present value from a K3N□-series Intelligent Signal Processor.

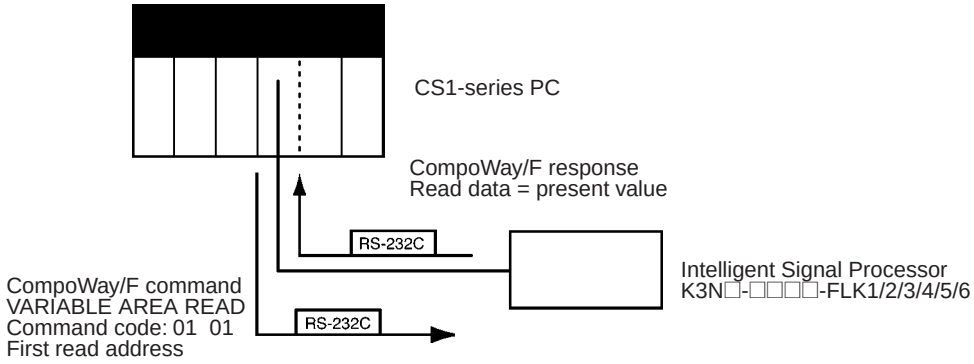

Sequence No. 600 (Send with ASCII Conversion, with Response) is used. The specified data beginning with the command code is converted ASCII and sent to the Intelligent Signal Processor with the specified node number. The response is converted to hexadecimal and stored starting at the specified word.

The command frame for reading the present value for a K3N□-□□□□-FLK1/2/3/4/5/6 Intelligent Signal Processor (command code 01 01) is shown below. The following data is specified in the operands for PMCR(260).

- Rightmost byte of S+1: Node number (2 digits BCD)
- S+2: Command code: MRC + SRC = “0101”
- S+4 on: Send data = Variable type + first read address + 00 + number of elements.

STX	Node No.		Subaddress	SID	Command code		Send data				ETX	BCC
					MRC	SRC	Variable type	First read address (Note)	Always 00	No. of elements		
(02Hex)	($\times10^1$)	($\times10^1$)	00	0	01	01	C0	0000	00	0001	(03Hex)	

Data in shaded portions is specified in the PMCR(260) instruction.

Note A first read address of 0000 specifies the present value. An address of 0001 specifies the maximum value; 0002, the minimum value; and 0003, the status.

The response frame is shown below. The response code and receive data are stored according to the operands for PMCR(260) as follows:

- D+1: Response code
- D+2 and on: Receive data

STX	Node No.		Subaddress	End code	Command code		Response code		Receive data	ETX	BCC
					MRC	SRC	Note 1		Read data (Note 2)		
(02 Hex)	($\times10^1$)	($\times10^1$)			01	01	00	00	0000	(03 Hex)	

Data in shaded portions is stored at the location specified by the operand in the PMCR(260) instruction.

Note 1. Response Codes

Response code	Meaning
“0000”	Normal end
“1001”	Command too long
“1002”	Command too short
“1100”	Parameter error
“1101”	Area type error
“1103”	First address range error
“2203”	Operating error

2. The read data is returned as 4-digit hexadecimal as follows: F0019999 to 00099999 Hex.

The 2nd and 3rd operands of the PMCR(260) instruction are specified as follows.

Send Data Word Allocation (2nd Operand of PMCR(260))

Offset	Contents (data format)		Data
+0	Number of send data words (4 digits BCD)		0007
+1	(Undefined)	Node No. (2 digits BCD)	0000 Hex
+2	MRC (2 digits Hex)	SRC (2 digits Hex)	0101 Hex
+3	Number of send bytes (4 digits BCD)		0012 (BCD)
+4	Send data (12 digits Hex)		C000 Hex
+5			0000 Hex
+6			0001 Hex

Receive Data Word Allocation (3rd Operand of PMCR(260))

Offset	Contents (data format)	Data
+0	Number of receive data words (4 digits BCD)	EX is stored at reception (0004)
+1	Response code (4 digits Hex)	The response code will be stored in hexadecimal form. The normal end response code is 0000.
+2	Receive data (8 digits Hex)	The 4 bytes of read data.
+3		

Broadcast with ASCII Conversion, No Response (Sequence No. 601)

This sequence converts the specified data beginning with the command code to ASCII and broadcasts it. No responses are received.

Send Data Word Allocation (2nd Operand of PMCR(260))

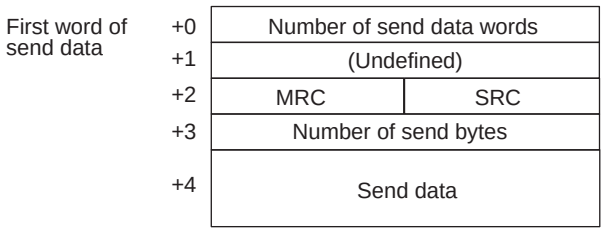

Offset	Contents (data format)		Data
+0	Number of send data words (4 digits BCD)		0005 to 0128
+1	(Undefined)		---
+2	MRC (2 digits Hex)	SRC (2 digits Hex)	Set the command code for the required service
+3	Number of send bytes (4 digits BCD)		Number of data bytes from the next byte after the command code until the byte just before the ETX. 0 to 984 decimal
+4 on	Send data (4-digit Hex)		The data specified in hexadecimal here will be converted to ASCII and the number of bytes specified in S+3 will be sent.

Note 1. Set the number of send bytes to twice the number of bytes in memory. This is necessary because the data is converted to ASCII data before being sent.

2. When hexadecimal data is converted to ASCII data, data is sent starting from the send data word with the largest offset. This is done because ladder programming handles data in 4-byte units.

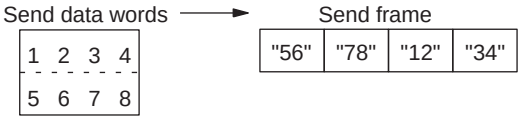

Receive Data Word Allocation (3rd Operand of PMCR(260))

None. (Specify a dummy value for the operand, such as 000.)

Send with No Conversion and with Response (Sequence No. 602)

This sequence sends the specified data beginning with the command code to the specified Unit. The response is stored starting at the specified word. No conversions are performed on the send and receive data.

Send Data Word Allocation (2nd Operand of PMCR(260))

First word of send data	+0	Number of send data words	
	+1	(Undefined)	Node No.
	+2	MRC	SRC
	+3	Number of send bytes	
	+4	Send data	

Offset	Contents (data format)		Data
+0	Number of send data words (4 digits BCD)		0005 to 0128
+1	(Undefined)	Node No. (2 digits BCD)	00 to 99
+2	MRC (2 digits Hex)	SRC (2 digits Hex)	Set the command code for the required service
+3	Number of send bytes (4 digits BCD)		Number of data bytes from the next byte after the command code until the byte just before the ETX. 0 to 492 decimal
+4 on	Send data		The data specified in hexadecimal here is not converted and the number of bytes specified in S+3 is sent.
	+0	+1	
	+2	+3	
	+4	+5	
	+6 etc.		

Receive Data Word Allocation (3rd Operand of PMCR(260))

Receive data storage words	+0	Number of receive data words
	+1	Response code
	+2	Receive data

Offset	Contents (data format)		Data
+0	Number of receive data words (4 digits BCD)		0003 to 0128
+1	Response code (4 digits Hex)		The response code will be stored in hexadecimal form.
+2 on	Receive data (Hex)		The data from just after the response code until just before the ETX is stored here without conversion.
	+0	+1	
	+2	+3	
	+4	+5	
	+6 etc.		

Broadcast with No Conversion and No Response (Sequence No. 603)

This sequence broadcasts the specified data beginning with the command code No responses are received and no conversions are performed on the send data.

Send Data Word Allocation (2nd Operand of PMCR(260))

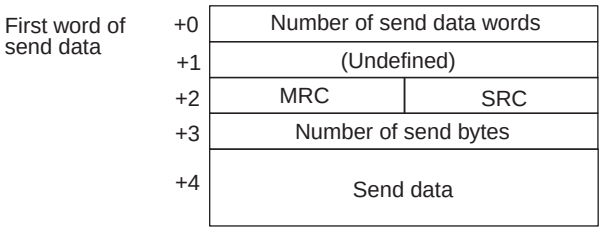

Offset	Contents (data format)		Data
+0	Number of send data words (4 digits BCD)		0005 to 0128
+1	(Undefined)		---
+2	MRC (2 digits Hex)	SRC (2 digits Hex)	Set the command code for the required service
+3	Number of send bytes (4 digits BCD)		Number of data bytes from the next byte after the command code until the byte just before the ETX. 0 to 492 decimal
+4 on	Send data		The data specified in hexadecimal here is not converted and the number of bytes specified in S+3 is sent.
	+0	+1	
	+2	+3	
	+4	+5	
	+6 etc.		

Receive Data Word Allocation (3rd Operand of PMCR(260))

None. (Specify a dummy value for the operand, such as #0000.)

Generalpurpose Send with No Conversion and with Response (Sequence No. 604)

This sequence sends the specified data beginning with the subaddress and SID to the specified Unit. The response is stored starting at the specified word. No conversions are performed on the send and receive data.

Send Data Word Allocation (2nd Operand of PMCR(260))

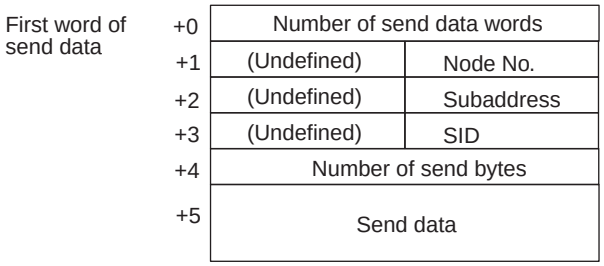

Offset	Contents (data format)		Data
+0	Number of send data words (4 digits BCD)		0006 to 0128
+1	Always 00 Hex	Node No. (2 digits BCD)	00 to 99
+2	MRC (2 digits Hex)	Subaddress (2 digits Hex)	Specify the subaddress of the device being communicated with.
+3	Always 00 Hex	SID (1 digit Hex)	Set the service ID of the required service (e.g., retries).
+4	Number of send bytes (4 digits BCD)		Number of data bytes from the MCR until the byte just before the ETX. 0 to 490 decimal
+5 on	Send data		The data specified in hexadecimal here is not converted and the number of bytes specified in S+4 is sent.
	+0	+1	
	+2	+3	
	+4	+5	
	+6 etc.		

Receive Data Word Allocation (3rd Operand of PMCR(260))

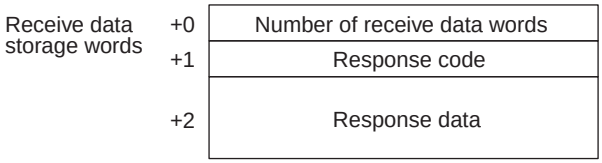

Offset	Contents (data format)		Data
+0	Number of receive data words (4 digits BCD)		0003 to 0128
+1	Response code (4 digits Hex)		The response code will be stored in hexadecimal form.
+2 on	Receive data		The data from just after the response code until just before the ETX is stored here without conversion.
	+0	+1	
	+2	+3	
	+4	+5	
	+6 etc.		

Generalpurpose Broadcast with No Conversion and No Response (Sequence No. 605)

This sequence broadcasts the specified data beginning with the subaddress and SID. No responses are received and no conversions are performed on the send data.

Send Data Word Allocation (2nd Operand of PMCR(260))

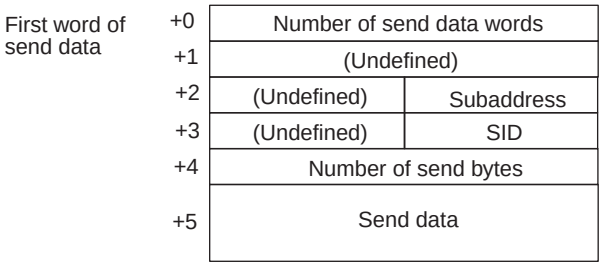

Offset	Contents (data format)		Data
+0	Number of send data words (4 digits BCD)		0006 to 0128
+1	Always 0000 Hex		---
+2	MRC (2 digits Hex)	Subaddress (2 digits Hex)	Specify the subaddress of the device being communicated with.
+3	Always 00 Hex	SID (1 digit Hex)	Set the service ID of the required service (e.g., retries).
+4	Number of send bytes (4 digits BCD)		Number of data bytes from the MCR until the byte just before the ETX. 0 to 490 decimal
+5 on	Send data		The data specified in hexadecimal here is not converted and the number of bytes specified in S+4 is sent.
	+0	+1	
	+2	+3	
	+4	+5	
	+6 etc.		

Receive Data Word Allocation (3rd Operand of PMCR(260))

None. (Specify a dummy value for the operand, such as #0000.)

Connections

Connection methods between a Serial Communications Board and the K3N□-series Intelligent Signal Processor are shown below.

RS-232C

- RS-232C connections are one-to-one.
- The max. cable length is 15 m. Use an RS-232C optical interface (Z3RN) when extending the transmission line beyond 15 m.
- Use shielded, twisted-pair cable.

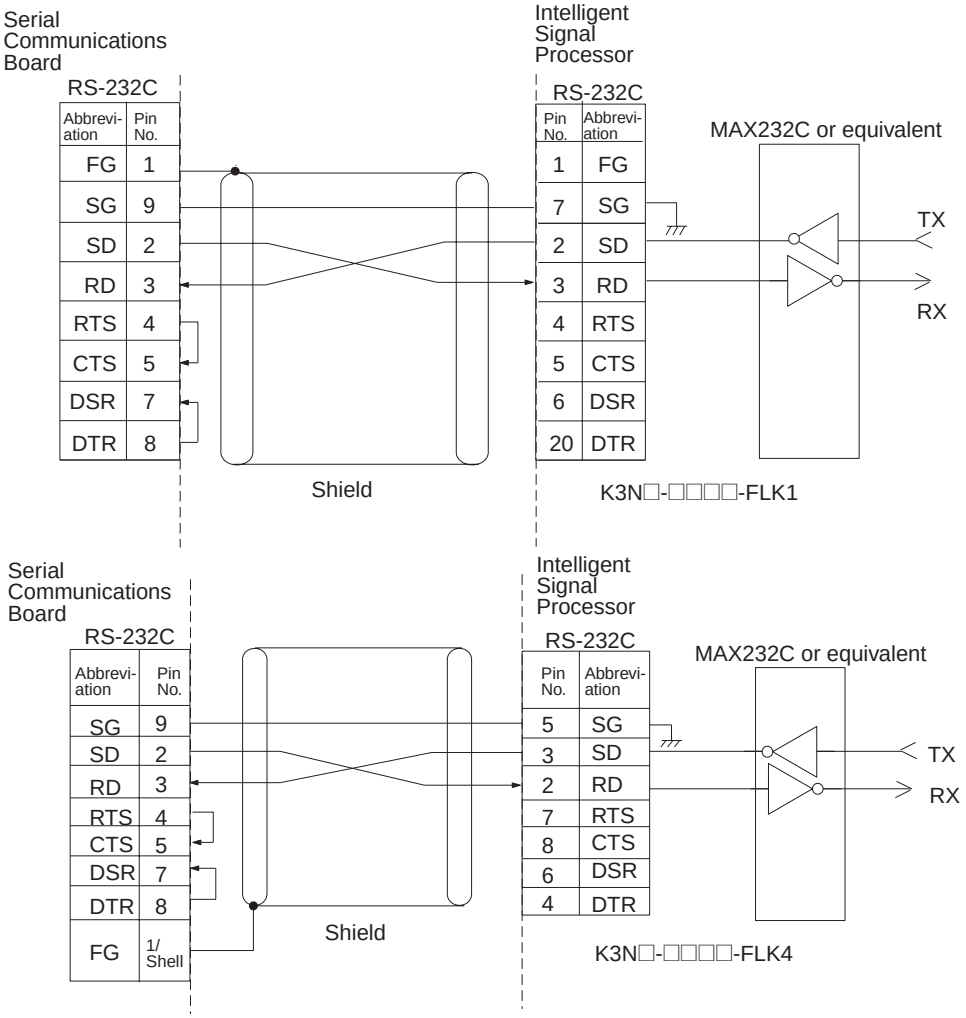

RS422 4wire Connections

- RS-422 connections can be one-to-one, or one-to-N when a 3G2A9-AL001 Link Adapter is used. A maximum of 32 Serial Communications Boards can be connected in one-to-N systems.
- The total cable length can be 500 m max.
- Use shielded, twisted-pair cable.
- Be sure to turn ON the terminating resistance switches at the device at each end of the transmission line.

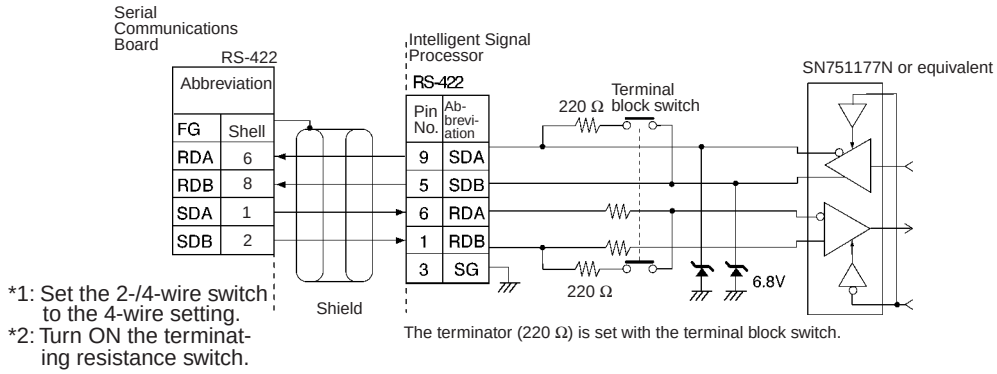

RS-485 2-wire Connections

- RS-485 connections can be one-to-one or one-to-N. A maximum of 32 Serial Communications Boards can be connected in one-to-N systems.
- The total cable length can be 500 m max.
- Use shielded, twisted-pair cable.
- Be sure to turn ON the terminator switches only in the devices at each end of the transmission line.

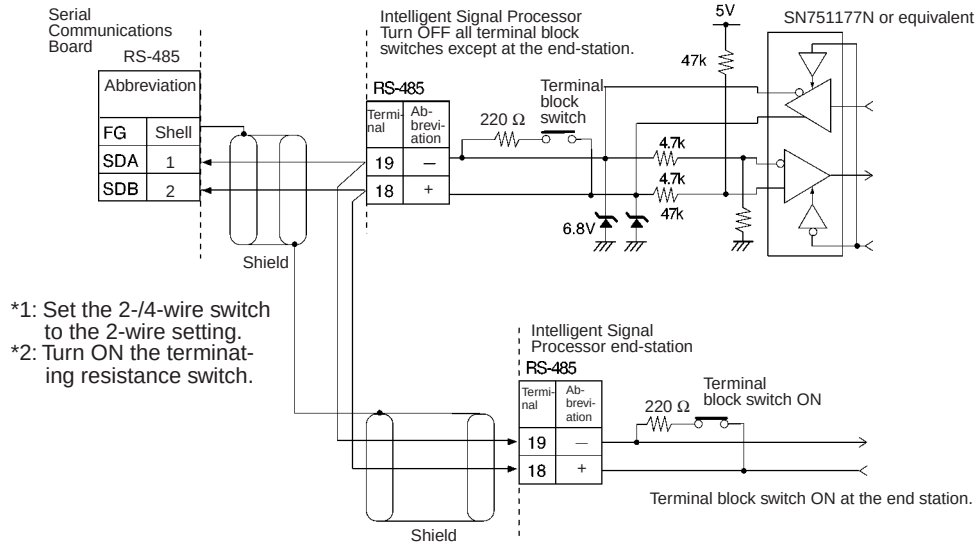

Note SYSMAC BUS Wired Remote I/O devices cannot be connected.

Appendix C

E5□K Digital Controller Read Protocol

The E5□K Digital Controller Read Protocol reads and controls various parameters in remote mode for the Controller connected to the Serial Communications Board via RS-232C or RS-485 cable.

Structure of the Protocol

The following table shows the structure of the E5□K Digital Controller Read Protocol.

Sequence No.	Communications sequence name	Function	Ladder interface	
			Send word allocation	Receive word allocation
000	Read process value	Reads the process value.	Yes	Yes
001	Read set point during SP ramp	Reads the set point during SP ramp.	Yes	Yes
002	Read MV	Reads the MV (heating, cooling).	Yes	Yes
003	Read set point	Reads the set point.	Yes	Yes
004	Read alarm value	Reads alarm value 1, 2.	Yes	Yes
005	Read proportional band, integral time, and derivative time	Reads the proportional band, integral (reset) time, and derivative (rate) time	Yes	Yes
006	Read cooling coefficient	Reads the cooling coefficient.	Yes	Yes
007	Read dead band	Reads the dead band.	Yes	Yes
008	Read manual reset value	Reads the manual reset value.	Yes	Yes
009	Read hysteresis	Reads the hysteresis (heating, cooling).	Yes	Yes
010	Read control period	Reads the control period (heating, cooling).	Yes	Yes
011	Read SP ramp time unit and set value	Reads the SP ramp time unit and SP ramp set value.	Yes	Yes
012	Read LBA detection time	Reads the LBA detection time.	Yes	Yes
013	Read MV at stop and PV error	Reads the MV at stop and the MV at PV error.	Yes	Yes
014	Read MV limits	Reads the MV limits.	Yes	Yes
015	Read input digital filter	Reads the input digital filter.	Yes	Yes
016	Read alarm hysteresis	Reads the alarm 1, 2 hysteresis.	Yes	Yes
017	Read input shifts	Reads the input shift limits.	Yes	Yes
018	Read level 0 parameters	Reads parameters in level 0.	Yes	Yes
019	Read level 1 parameters 1	Reads parameters in level 1.	Yes	Yes
020	Read level 1 parameters 2	Reads parameters in level 1.	Yes	Yes
021	Read level 2 parameters 1	Reads parameters in level 2.	Yes	Yes
022	Read level 2 parameters 2	Reads parameters in level 2.	Yes	Yes
023	General-purpose read	Reads the value of the specified parameter.	Yes	Yes

Note Ladder Interface Settings

YES: User settings are required for the 2nd or 3rd operands of PMCR.

NO: Send word allocation: Set the constant 0000 for the 2nd operand (S).

Receive word allocation: Set a dummy word (e.g., DM 0000) address for the 3rd operand (D).

Connection Configuration

The connection configuration for using the E5□K Digital Controller Read Protocol is shown below.

RS-232C Connection

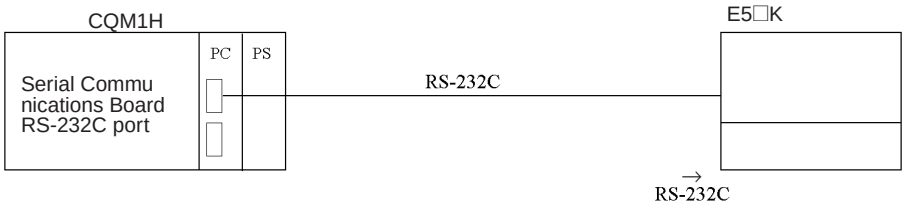

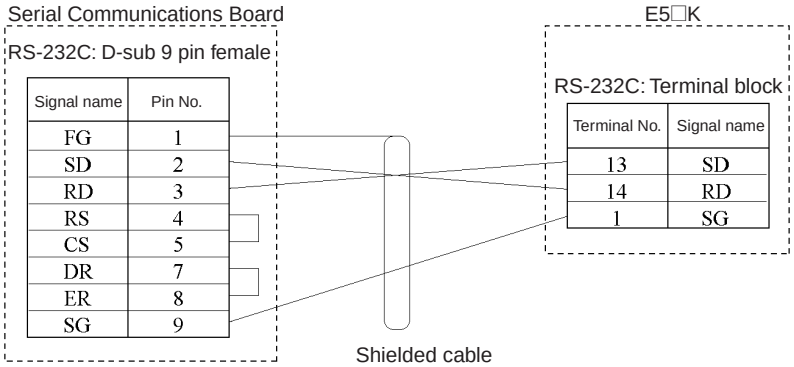

Note 1. The communications configuration is a one-to-one configuration and the maximum cable length is 15 m.

2. Use a shielded twisted-pair cable (AWG28i or greater) for the cable.

RS-485 Connection

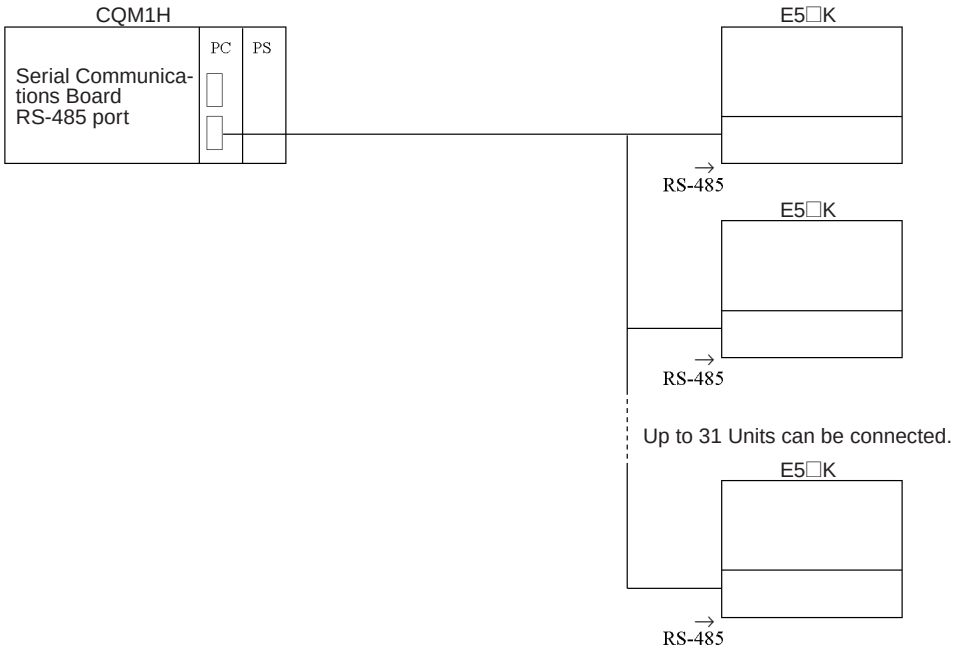

Note 1. The communications configuration is a one-to-one configuration or a one-to-N configuration. In the one-to-N configuration, up to 32 units including the Serial Communications Board can be connected.

2. The maximum cable length is 500 m. Use a shielded twisted-pair cable for the cable (AWG28i or greater).

3. Connect a terminator only at both ends of the transmission path. For instance, in the example shown below, connect a terminator to the Serial Communications Board and Unit No.30 and do not connect

any terminator to units No.0 to No.29. Use a resistance of 120Ω (1/2W) for the terminators (the total resistance of both ends must be 54Ω or more).

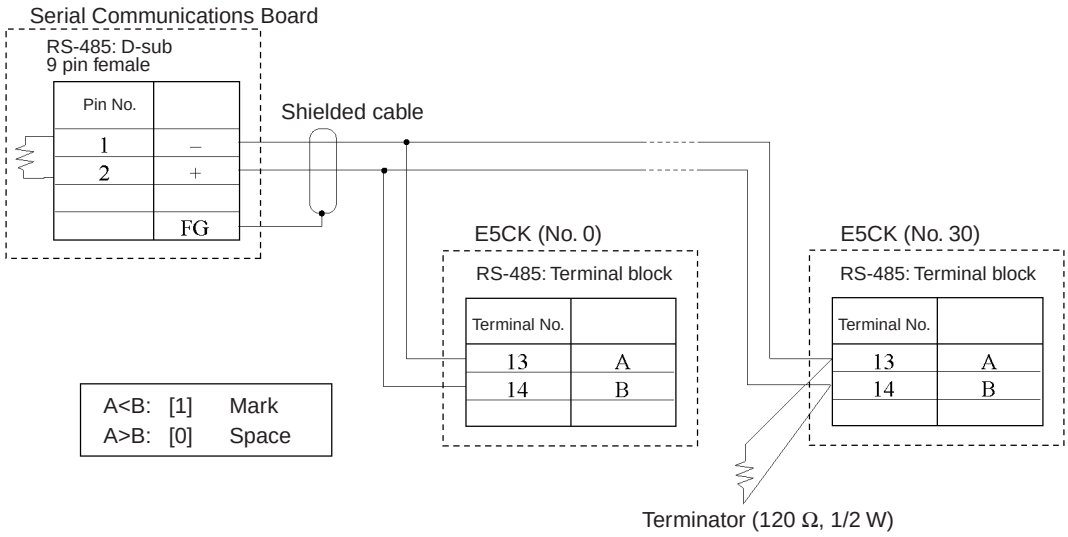

Read Process Value (Sequence No. 000)

Reads the process value and stores the results in the specified words.

Send Data Word Allocation (2nd Operand of PMCR)

First word of send data	+0	Number of send data words	
	+1	(Undefined)	Unit No.

Offset	Contents (data format)	Data
+0	Number of send data words (4 digits BCD)	0002 (fixed)
+1	Unit No. (2 digits BCD)	00 to 31

Receive Data Word Allocation (3rd Operand of PMCR)

Receive data storage words	+0	Number of receive data words
	+1	Process value

Offset	Contents (data format)	Data
+0	Number of receive data words (4 digits BCD)	0002
+1	Process value (4 digits BCD)	Scaling lower limit to upper limit

Read Set Point during SP Ramp (Sequence No. 001)

Reads the set point during the SP ramp and stores the results in the specified words.

Send Data Word Allocation (2nd Operand of PMCR)

First word of send data	+0	Number of send data words	
	+1	(Undefined)	Unit No.

Offset	Contents (data format)	Data
+0	Number of send data words (4 digits BCD)	0002 (fixed)
+1	Unit No. (2 digits BCD)	00 to 31

Receive Data Word Allocation (3rd Operand of PMCR)

Receive data storage words	+0	Number of receive data words
	+1	Set point during SP ramp

Offset	Contents (data format)	Data
+0	Number of receive data words (4 digits BCD)	0002
+1	Set point during SP ramp (4 digits BCD)	Set point lower limit to upper limit

Read MV (Sequence No. 002)

Reads the MV (manipulated variable) for heating and cooling and stores the results in the specified words.

Send Data Word Allocation (2nd Operand of PMCR)

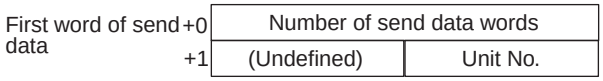

Offset	Contents (data format)	Data
+0	Number of send data words (4 digits BCD)	0002 (fixed)
+1	Unit No. (2 digits BCD)	00 to 31

Receive Data Word Allocation (3rd Operand of PMCR)

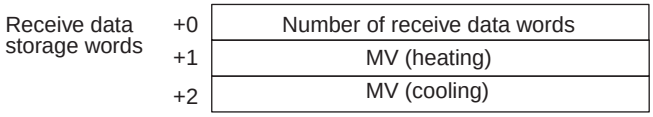

Offset	Contents (data format)	Data
+0	Number of receive data words (4 digits BCD)	0003
+1	MV (heating) (4 digits BCD)	F050 to 1050, 0000 to 1050 for heating/ cooling control F indicates a negative value.
+2	MV (cooling) (4 digits BCD)	F050 to 1050 F indicates a negative value.

Read Set Point (Sequence No. 003)

Reads the set point and stores the results in the specified word.

Send Data Word Allocation (2nd Operand of PMCR)

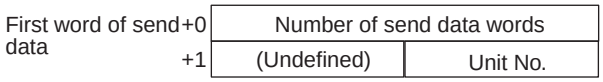

Offset	Contents (data format)	Data
+0	Number of send data words (4 digits BCD)	0002 (fixed)
+1	Unit No. (2 digits BCD)	00 to 31

Receive Data Word Allocation (3rd Operand of PMCR)

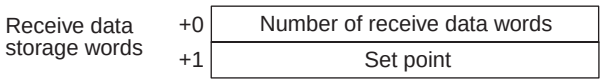

Offset	Contents (data format)	Data
+0	Number of receive data words (4 digits BCD)	0002
+1	Set point (4 digits BCD)	Set point lower limit to upper limit

Read Alarm Value (Sequence No. 004)

Reads alarm value 1 and alarm value 2 and stores the results in the specified words.

Send Data Word Allocation (2nd Operand of PMCR)

First word of send data	+0	Number of send data words	
	+1	(Undefined)	Unit No.

Offset	Contents (data format)	Data
+0	Number of send data words (4 digits BCD)	0002 (fixed)
+1	Unit No. (2 digits BCD)	00 to 31

Receive Data Word Allocation (3rd Operand of PMCR)

Receive data storage words	+0	Number of receive data words
	+1	Alarm value 1
	+2	Alarm value 2

Offset	Contents (data format)	Data
+0	Number of receive data words (4 digits BCD)	0003
+1	Alarm value 1 (4 digits BCD)	A999 to 9999 F indicates a negative value and A indicates –1.
+2	Alarm value 2 (4 digits BCD)	A999 to 9999 F indicates a negative value and A indicates –1.

Read Proportional Band, Integral Time, and Derivative Time (Sequence No. 005)

Reads the proportional band, integral time, and derivative time and stores the results in the specified words.

Send Data Word Allocation (2nd Operand of PMCR)

First word of send data	+0	Number of send data words	
	+1	(Undefined)	Unit No.

Offset	Contents (data format)	Data
+0	Number of send data words (4 digits BCD)	0002 (fixed)
+1	Unit No. (2 digits BCD)	00 to 31

Receive Data Word Allocation (3rd Operand of PMCR)

Receive data storage words	+0	Number of receive data words
	+1	Proportional band
	+2	Integral time
	+3	Derivative time

Offset	Contents (data format)	Data
+0	Number of receive data words (4 digits BCD)	0004
+1	Proportional band (4 digits BCD)	0000 to 9999
+2	Integral time (4 digits BCD)	0000 to 3999
+3	Derivative time (4 digits BCD)	0000 to 3999

Read Cooling Coefficient (Sequence No. 006)

Reads the cooling coefficient and stores the results in the specified words.

Send Data Word Allocation (2nd Operand of PMCR)

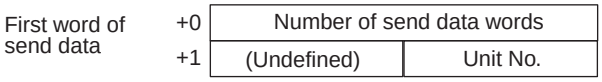

Offset	Contents (data format)	Data
+0	Number of send data words (4 digits BCD)	0002 (fixed)
+1	Unit No. (2 digits BCD)	00 to 31

Receive Data Word Allocation (3rd Operand of PMCR)

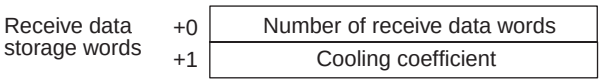

Offset	Contents (data format)	Data
+0	Number of receive data words (4 digits BCD)	0002
+1	Cooling coefficient (4 digits BCD)	0001 to 9999

Read Dead Band (Sequence No. 007)

Reads the dead band and stores the results in the specified words.

Send Data Word Allocation (2nd Operand of PMCR)

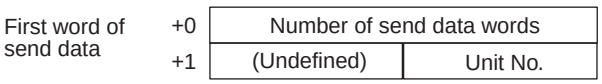

Offset	Contents (data format)	Data
+0	Number of send data words (4 digits BCD)	0002 (fixed)
+1	Unit No. (2 digits BCD)	00 to 31

Receive Data Word Allocation (3rd Operand of PMCR)

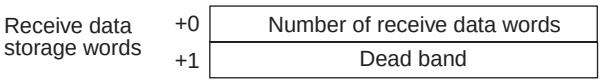

Offset	Contents (data format)	Data
+0	Number of receive data words (4 digits BCD)	0002
+1	Dead band (4 digits BCD)	A999 to 9999 F indicates a negative value and A indicates –1.

Read Manual Reset Value (Sequence No. 008)

Reads the manual reset value and stores the results in the specified words.

Send Data Word Allocation (2nd Operand of PMCR)

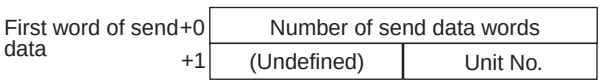

Offset	Contents (data format)	Data
+0	Number of send data words (4 digits BCD)	0002 (fixed)
+1	Unit No. (2 digits BCD)	00 to 31

Receive Data Word Allocation (3rd Operand of PMCR)

Receive data storage words	+0	Number of receive data words
	+1	Manual reset value

Offset	Contents (data format)	Data
+0	Number of receive data words (4 digits BCD)	0002
+1	Manual reset value (4 digits BCD)	0000 to 1000

Read Hysteresis (Sequence No. 009)

Reads the hysteresis for heating and for cooling and stores the results in the specified words.

Send Data Word Allocation (2nd Operand of PMCR)

First word of send data	+0	Number of send data words	
	+1	(Undefined)	Unit No.

Offset	Contents (data format)	Data
+0	Number of send data words (4 digits BCD)	0002 (fixed)
+1	Unit No. (2 digits BCD)	00 to 31

Receive Data Word Allocation (3rd Operand of PMCR)

Receive data storage words	+0	Number of receive data words
	+1	Hysteresis (heating)
	+2	Hysteresis (cooling)

Offset	Contents (data format)	Data
+0	Number of receive data words (4 digits BCD)	0003
+1	Hysteresis (heating) (4 digits BCD)	0001 to 9999
+2	Hysteresis (cooling) (4 digits BCD)	0001 to 9999

Read Control Period (Sequence No. 010)

Reads the control period for heating and for cooling and stores the results in the specified words.

Send Data Word Allocation (2nd Operand of PMCR)

First word of send data	+0	Number of send data words	
	+1	(Undefined)	Unit No.

Offset	Contents (data format)	Data
+0	Number of send data words (4 digits BCD)	0002 (fixed)
+1	Unit No. (2 digits BCD)	00 to 31

Receive Data Word Allocation (3rd Operand of PMCR)

Receive data storage words	+0	Number of receive data words
	+1	Control period (heating)
	+2	Control period (cooling)

Offset	Contents (data format)	Data
+0	Number of receive data words (4 digits BCD)	0003
+1	Control period (heating) (4 digits BCD)	0001 to 0099
+2	Control period (cooling) (4 digits BCD)	0001 to 0099

Read SP Ramp Time Unit and Set Value (Sequence No. 011)

Reads the SP ramp time unit and SP ramp set value and stores the results in the specified words.

Send Data Word Allocation (2nd Operand of PMCR)

First word of send data	+0	Number of send data words	
	+1	(Undefined)	Unit No.

Offset	Contents (data format)	Data
+0	Number of send data words (4 digits BCD)	0002 (fixed)
+1	Unit No. (2 digits BCD)	00 to 31

Receive Data Word Allocation (3rd Operand of PMCR)

Receive data storage words	+0	Number of receive data words
	+1	SP ramp time unit
	+2	SP ramp set value

Offset	Contents (data format)	Data
+0	Number of receive data words (4 digits BCD)	0003
+1	SP ramp time unit (4 digits BCD)	0000: s, 0001: hr
+2	SP ramp set value (4 digits BCD)	0000 to 9999

Read LBA Detection Time (Sequence No. 012)

Reads the LBA (loop break alarm) detection time and stores the results in the specified words.

Send Data Word Allocation (2nd Operand of PMCR)

First word of send data	+0	Number of send data words	
	+1	(Undefined)	Unit No.

Offset	Contents (data format)	Data
+0	Number of send data words (4 digits BCD)	0002 (fixed)
+1	Unit No. (2 digits BCD)	00 to 31

Receive Data Word Allocation (3rd Operand of PMCR)

Receive data storage words	+0	Number of receive data words
	+1	LBA detection time

Offset	Contents (data format)	Data
+0	Number of receive data words (4 digits BCD)	0002
+1	LBA detection time (4 digits BCD)	0000 to 9999

Read MV at Stop Time and at PV Error (Sequence No.013)

Reads the MV at stop time and at PV error and stores the results in the specified words.

Send Data Word Allocation (2nd Operand of PMCR)

First word of send data	+0	Number of send data words	
	+1	(Undefined)	Unit No.

Offset	Contents (data format)	Data
+0	Number of send data words (4 digits BCD)	0002 (fixed)
+1	Unit No. (2 digits BCD)	00 to 31

Receive Data Word Allocation (3rd Operand of PMCR)

Receive data storage words

+0	Number of receive data words
+1	MV at stop time
+2	MV at PV error

Offset	Contents (data format)	Data
+0	Number of receive data words (4 digits BCD)	0003
+1	MV at stop time (4 digits BCD)	F050 to 1050 F indicates a negative value. A050 to 1050 for heating/cooling control A indicates a negative value.
+2	MV at PV error (4 digits BCD)	F050 to 1050 F indicates a negative value.

Read MV Limits (Sequence No. 014)

Reads the MV upper limit, MV lower limit, and MV change rate limit and stores the results in the specified words.

Send Data Word Allocation (2nd Operand of PMCR)

First word of send data

+0	Number of send data words	
+1	(Undefined)	Unit No.

Offset	Contents (data format)	Data
+0	Number of send data words (4 digits BCD)	0002 (fixed)
+1	Unit No. (2 digits BCD)	00 to 31

Receive Data Word Allocation (3rd Operand of PMCR)

Receive data storage words

+0	Number of receive data words
+1	MV upper limit
+2	MV lower limit
+3	MV change rate limit

Offset	Contents (data format)	Data
+0	Number of receive data words (4 digits BCD)	0004
+1	MV upper limit (4 digits BCD)	MV lower limit + 1 to 1050 0000 to 1050 for heating/cooling control
+2	MV lower limit (4 digits BCD)	F050 to MV upper limit –1 F indicates a negative value values. A050 to 1050 for heating/cooling control A indicates a negative value.
+3	MV change rate limit (4 digits BCD)	0000 to 1000

Read Input Digital Filter (Sequence No. 015)

Reads the input digital filter and stores the results in the specified words.

Send Data Word Allocation (2nd Operand of PMCR)

First word of send data

+0	Number of send data words	
+1	(Undefined)	Unit No.

Offset	Contents (data format)	Data
+0	Number of send data words (4 digits BCD)	0002 (fixed)
+1	Unit No. (2 digits BCD)	00 to 31

Receive Data Word Allocation (3rd Operand of PMCR)

Receive data storage words	+0	Number of receive data words
	+1	Input digital filter

Offset	Contents (data format)	Data
+0	Number of receive data words (4 digits BCD)	0002
+1	Input digital filter (4 digits BCD)	0000 to 9999

Read Alarm Hysteresis (Sequence No. 016)

Reads the alarm 1 hysteresis and alarm 2 hysteresis and stores the results in the specified words.

Send Data Word Allocation (2nd Operand of PMCR)

First word of send data	+0	Number of send data words	
	+1	(Undefined)	Unit No.

Offset	Contents (data format)	Data
+0	Number of send data words (4 digits BCD)	0002 (fixed)
+1	Unit No. (2 digits BCD)	00 to 31

Receive Data Word Allocation (3rd Operand of PMCR)

Receive data storage words	+0	Number of receive data words
	+1	Alarm 1 hysteresis
	+2	Alarm 2 hysteresis

Offset	Contents (data format)	Data
+0	Number of receive data words (4 digits BCD)	0003
+1	Alarm 1 hysteresis (4 digits BCD)	0001 to 9999
+2	Alarm 2 hysteresis (4 digits BCD)	0001 to 9999

Read Input Shift Limits (Sequence No. 017)

Reads the input shift upper limit and input shift lower limit and stores the results in the specified words.

Send Data Word Allocation (2nd Operand of PMCR)

First word of send data	+0	Number of send data words	
	+1	(Undefined)	Unit No.

Offset	Contents (data format)	Data
+0	Number of send data words (4 digits BCD)	0002 (fixed)
+1	Unit No. (2 digits BCD)	00 to 31

Receive Data Word Allocation (3rd Operand of PMCR)

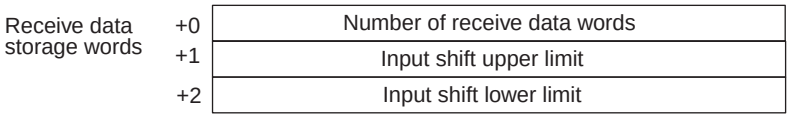

Offset	Contents (data format)	Data
+0	Number of receive data words (4 digits BCD)	0003
+1	Input shift upper limit (4 digits BCD)	A999 to 9999 F indicates a negative value and A indicates –1.
+2	Input shift lower limit (4 digits BCD)	A999 to 9999 F indicates a negative value and A indicates –1.

Read Level 0 Parameters (Sequence No. 018)

Reads parameters in level 0 (process value, set point during SP ramp, MV (heating), MV (cooling), and set point) from multiple units and stores the results in the specified words.

Send Data Word Allocation (2nd Operand of PMCR)

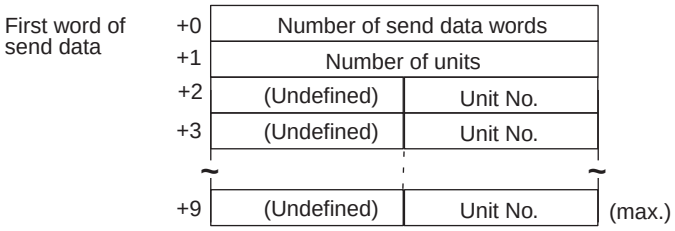

Offset	Contents (data format)	Data
+0	Number of send data words (4 digits BCD)	Number of units + 2
+1	Number of units (4 digits BCD)	0001 to 0008
+2 to 9	Unit No. (2 digits BCD)	00 to 31

Receive Data Word Allocation (3rd Operand of PMCR)

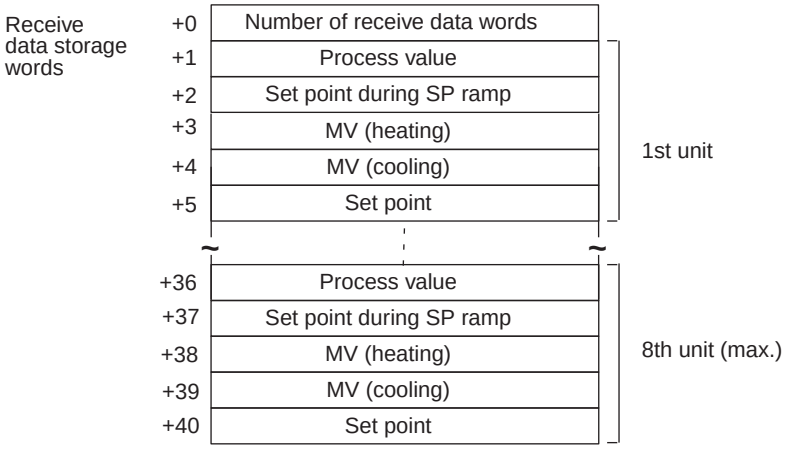

Offset	Contents (data format)	Data
+0	Number of receive data words (4 digits BCD)	Number of units × 5 + 1
+1	1st unit Process value (4 digits BCD)	Scaling lower limit to upper limit
+2	1st unit Set point during SP ramp (4 digits BCD)	Set point lower limit to upper limit
+3	1st unit MV (heating) (4 digits BCD)	F050 to 1050 F indicates a negative value. 0000 to 1050 for heating/cooling control
+4	1st unit MV (cooling) (4 digits BCD)	0000 to 1050
+5	1st unit Set point (4 digits BCD)	Set point lower limit to upper limit
	• • •	
+40 (max.)	8th unit Set point (4 digits BCD)	Set point lower limit to upper limit

Read Level 1 Parameters 1 (Sequence No. 019)

Reads parameters in level 1 (alarm value 1, alarm value 2 , alarm value 3, proportional band, integral time, and derivative time) from multiple units and stores the results in the specified words.

Send Data Word Allocation (2nd Operand of PMCR)

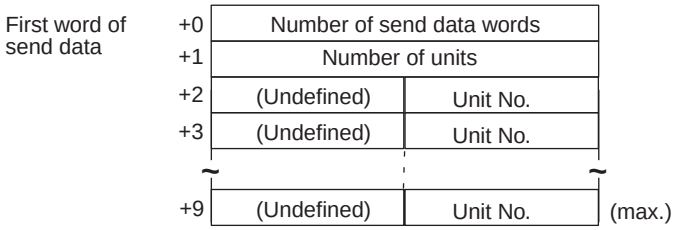

Offset	Contents (data format)	Data
+0	Number of send data words (4 digits BCD)	Number of units + 2
+1	Number of units (4 digits BCD)	0001 to 0008
+2 to 9	Unit No. (2 digits BCD)	00 to 31

Receive Data Word Allocation (3rd Operand of PMCR)

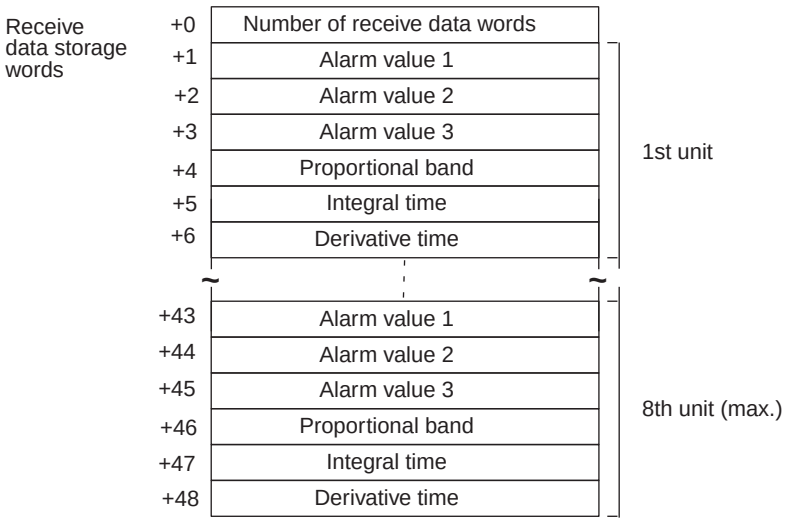

Offset	Contents (data format)	Data
+0	Number of receive data words (4 digits BCD)	Number of units × 6 + 1
+1	1st unit Alarm value 1 (4 digits BCD)	A999 to 9999 F indicates a negative value and A indicates –1.
+2	1st unit Alarm value 2 (4 digits BCD)	A999 to 9999 F indicates a negative value and A indicates –1.
+3	1st unit Alarm value 3 (4 digits BCD)	A999 to 9999 F indicates a negative value and A indicates –1.
+4	1st unit Proportional band (4 digits BCD)	0001 to 9999
+5	1st unit Integral time (4 digits BCD)	0000 to 3999
+6	1st unit Derivative time (4 digits BCD)	0000 to 3999
	• • •	
+48 (max.)	8th unit Derivative time (4 digits BCD)	0000 to 3999

Read Level 1 Parameters 2 (Sequence No. 020)

Reads parameters in level 1 (cooling coefficient, dead band, manual reset value, hysteresis (heating), hysteresis (cooling), control period (heating), and control period (cooling)) from multiple units and stores the results in the specified words.

Send Data Word Allocation (2nd Operand of PMCR)

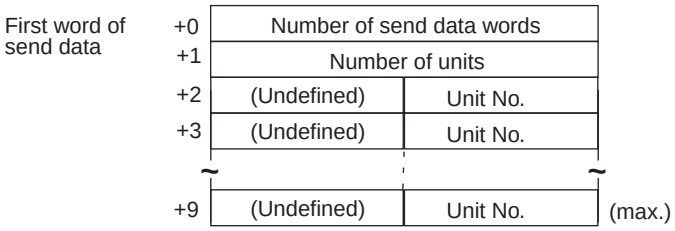

Offset	Contents (data format)	Data
+0	Number of send data words (4 digits BCD)	Number of units + 2
+1	Number of units (4 digits BCD)	0001 to 0008
+2 to 9	Unit No. (2 digits BCD)	00 to 31

Receive Data Word Allocation (3rd Operand of PMCR)

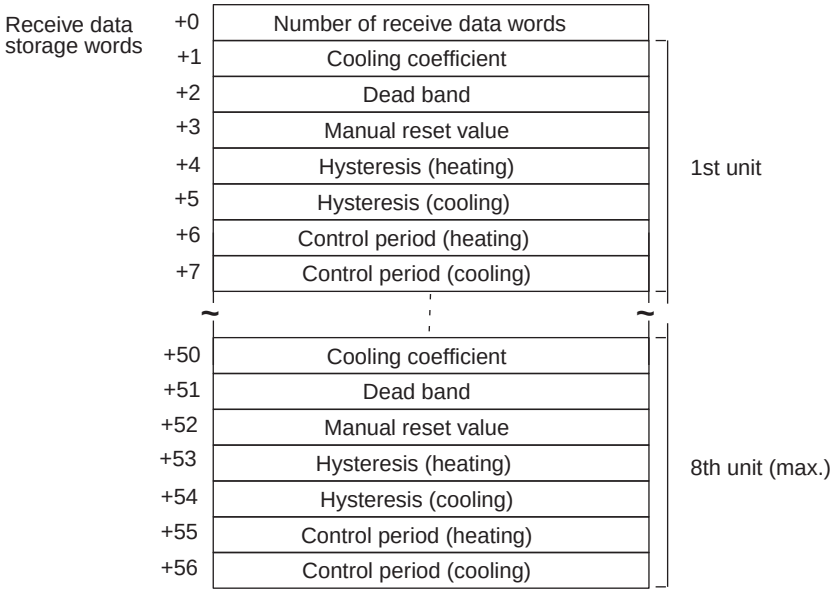

Offset	Contents (data format)	Data
+0	Number of receive data words (4 digits BCD)	Number of units × 7 + 1
+1	1st unit Cooling coefficient (4 digits BCD)	0001 to 9999
+2	1st unit Dead band (4 digits BCD)	A999 to 9999 F indicates a negative value and A indicates –1.
+3	1st unit Manual reset value (4 digits BCD)	0000 to 1000
+4	1st unit Hysteresis (heating) (4 digits BCD)	0001 to 9999
+5	1st unit Hysteresis (cooling) (4 digits BCD)	0001 to 9999
+6	1st unit Control period (heating) (4 digits BCD)	0001 to 0099
+7	1st unit Control period (cooling) (4 digits BCD)	0001 to 0099
	• • •	
+56 (max.)	8th unit Control period (cooling) (4 digits BCD)	0001 to 0099

Read Level 2 Parameters 1 (Sequence No. 021)

Reads parameters in level 2 (SP ramp time unit, SP ramp set value, LBA detection time, MV at stop, MV at PV Error, MV upper limit, MV lower limit, and MV change rate limit) from multiple units and stores the results in the specified words.

Send Data Word Allocation (2nd Operand of PMCR)

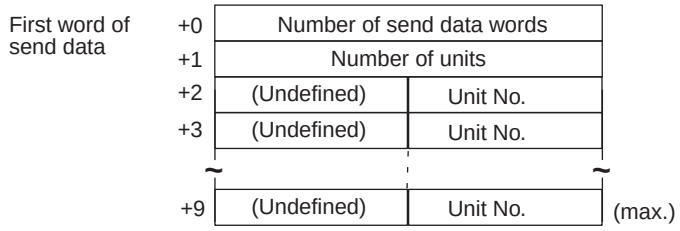

Offset	Contents (data format)	Data
+0	Number of send data words (4 digits BCD)	Number of units + 2
+1	Number of units (4 digits BCD)	0001 to 0008
+2 to 9	Unit No. (2 digits BCD)	00 to 31

Receive Data Word Allocation (3rd Operand of PMCR)

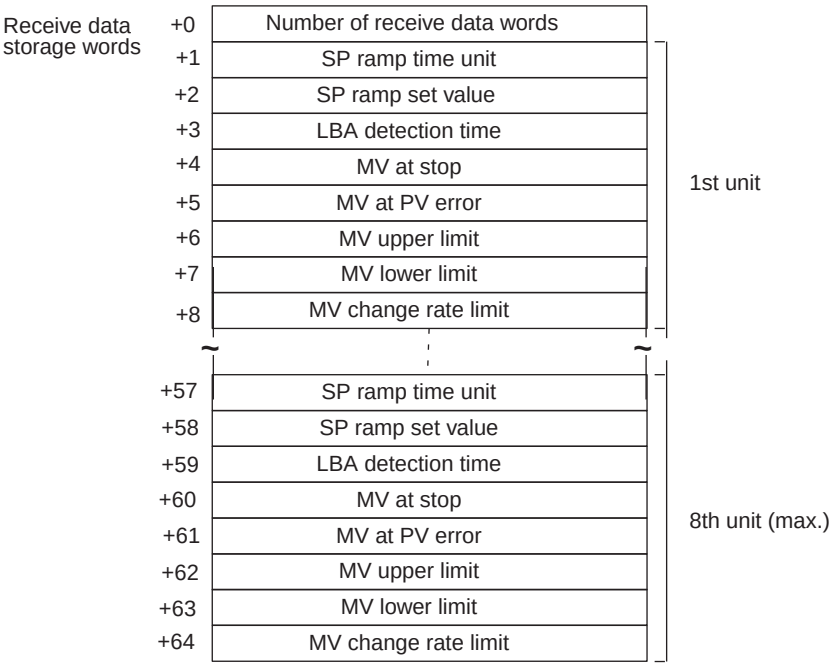

Offset	Contents (data format)	Data
+0	Number of receive data words (4 digits BCD)	Number of units × 8 + 1
+1	1st unit SP ramp time unit (4 digits BCD)	0000: s, 0001: hr
+2	1st unit SP ramp set value (4 digits BCD)	0000 to 9999
+3	1st unit LBA detection time (4 digits BCD)}	0000 to 9999
+4	1st unit MV at stop (4 digits BCD)	F050 to 1050 F indicates a negative value. A050 to 1050 for heating/cooling control A indicates a negative value.
+5	1st unit MV at PV error (4 digits BCD)	F050 to 1050 F indicates a negative value. A050 to 1050 for heating/cooling control A indicates a negative value.
+6	1st unit MV upper limit (4 digits BCD)	MV lower limit + 1 to 1050 0000 to 1050 for heating/cooling control
+7	1st unit MV lower limit (4 digits BCD)	F050 to MV upper limit –1 F indicates a negative value. A050 to 1050 for heating/cooling control A indicates a negative value.
+8	1st unit MV change rate limit (4 digits BCD)	0000 to 1000
	• • •	
+64 (max.)	8th unit MV change rate limit (4 digits BCD)	0000 to 1000

Read Level 2 Parameters 2 (Sequence No. 022)

Reads parameters in level 2 (input digital filter, alarm 1 hysteresis, alarm 2 hysteresis, alarm 3 hysteresis, input shift upper limit, and input shift lower limit) from multiple units and stores the results in the specified words.

Send Data Word Allocation (2nd Operand of PMCR)

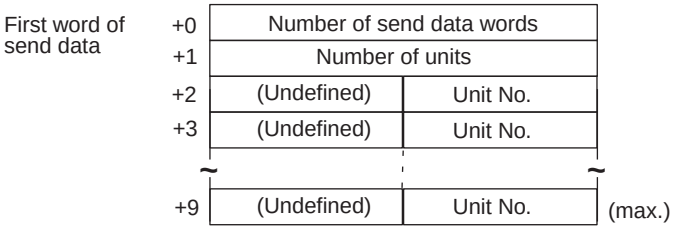

Offset	Contents (data format)	Data
+0	Number of send data words (4 digits BCD)	Number of units + 2
+1	Number of units (4 digits BCD)	0001 to 0008
+2 to 9	Unit No. (2 digits BCD)	00 to 31

Receive Data Word Allocation (3rd Operand of PMCR)

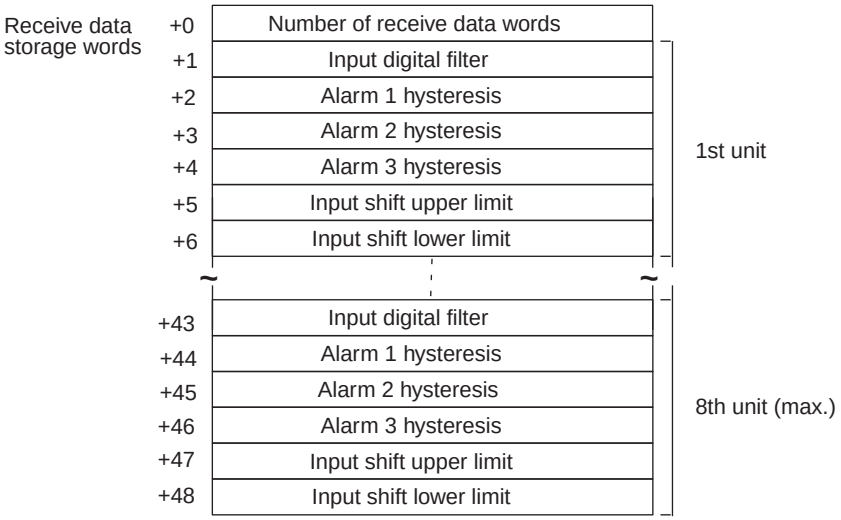

Offset	Contents (data format)	Data
+0	Number of receive data words (4 digits BCD)	Number of units × 6 + 1
+1	1st unit Input digital filter (4 digits BCD)	0000 to 9999
+2	1st unit Alarm 1 hysteresis (4 digits BCD)	0001 to 9999
+3	1st unit Alarm 2 hysteresis (4 digits BCD)	0001 to 9999
+4	1st unit Alarm 3 hysteresis (4 digits BCD)	0001 to 9999
+5	1st unit Input shift upper limit (4 digits BCD)	A999 to 9999 F indicates a negative value and A indicates –1.
+6	1st unit Input shift lower limit (4 digits BCD)	A999 to 9999 F indicates a negative value and A indicates –1.
	• • •	
+48 (max.)	8th unit Input shift lower limit (4 digits BCD)	A999 to 9999 F indicates a negative value and A indicates –1.

General-purpose Read (Sequence No. 023)

Reads the specified parameter and stores the results in the specified words.

Send Data Word Allocation (2nd Operand of PMCR)

First word of send data	+0	Number of send data words	
	+1	(Undefined)	Unit No.
	+2	(Undefined)	Parameter No.

Offset	Contents (data format)	Data
+0	Number of send data words (4 digits BCD)	0003 (fixed)
+1	Unit No. (2 digits BCD)	00 to 31
+2	Parameter No. (2 digits BCD)	Refer to the manual for the E5□K.

Receive Data Word Allocation (3rd Operand of PMCR)

Receive data storage words	+0	Number of receive data words
	+1	Read data

Offset	Contents (data format)	Data
+0	Number of receive data words (4 digits BCD)	0002
+1	Read data (4 digits BCD)	A999 to 9999 F indicates a negative value and A indicates –1.

Note To read parameters in the setup mode or extended mode, execute Switch to Level 1 (Sequence No. 075) in advance.

Appendix D

E5□K Digital Controller Write Protocol

The E5□K Digital Controller Write Protocol writes and controls various settings in remote mode for the Controller connected to the Serial Communications Board via RS-232C or RS-485 cable.

Note Negative values cannot be written. All values must be set as unsigned BCD.

Structure of the Protocol

The following table shows the structure of the E5□K Digital Controller Write Protocol.

Sequence No.	Communications sequence name	Function	Ladder interface	
			Send word allocation	Receive word allocation
050	Write set point	Writes the set point.	Yes	No
051	Write alarm value	Writes alarm value 1, 2.	Yes	No
052	Write proportional band, integral time, and derivative time	Writes the proportional band, integral time, and derivative time.	Yes	No
053	Write cooling coefficient	Writes the cooling coefficient.	Yes	No
054	Write dead band	Writes the dead band.	Yes	No
055	Write manual reset value	Writes the manual reset value.	Yes	No
056	Write hysteresis	Writes the hysteresis (heating, cooling)	Yes	No
057	Write control period	Writes the control period (heating, cooling)	Yes	No
058	Write SP ramp time units and set value	Writes the SP ramp time unit and SP ramp set value.	Yes	No
059	Write LBA detection time	Writes the LBA detection time.	Yes	No
060	Write MV at stop time and PV error	Writes the MV at stop and the MV at PC error.	Yes	No
061	Write MV limits	Writes the MV limits.	Yes	No
062	Write input digital filter	Writes the input digital filter.	Yes	No
063	Write alarm hysteresis	Writes alarm 1, 2 hysteresis.	Yes	No
064	Write input shift values	Writes the input shift values.	Yes	No
065	Write level 0 parameters	Writes parameters in level 0.	Yes	No
066	Write level 1 parameters 1	Writes parameters in level 1.	Yes	No
067	Write level 1 parameters 2	Writes parameters in level 1.	Yes	No
068	Write level 2 parameters 1	Writes parameters in level 2.	Yes	No
069	Write level 2 parameters 2	Writes parameters in level 2.	Yes	No
070	General-purpose write	Writes the value of the specified parameter.	Yes	No
071	Switch to level 0 (software reset)	Switches the setting level to level 0.	Yes	No
072	Run/stop	Initiates Run or Stop.	Yes	No
073	Remote/local	Switches the mode to remote or local mode.	Yes	No
074	Execute/cancel AT	Executes or cancels AT.	Yes	No
075	Switch to level 1	Switches the setting level to level 1.	Yes	No
076	Software reset	Resets the E5□K.	Yes	No

Note Ladder Interface Settings

YES: User settings are required for the 2nd or 3rd operands of PMCR.

NO: Send word allocation: Set the constant 0000 for the 2nd operand (S).
Receive word allocation: Set a dummy word (e.g., DM 0000) address for the 3rd operand (D).

Connections

The connections are the same as that for the E5□K Digital Controller Read Protocol.

Write Set Point (Sequence No. 050)

Writes the set point.

Send Data Word Allocation (2nd Operand of PMCR)

First word of send data	+0	Number of send data words	
	+1	(Undefined)	Unit No.
	+2	set point	

Offset	Contents (data format)	Data
+0	Number of send data words (4 digits BCD)	0003 (fixed)
+1	Unit No. (2 digits BCD)	00 to 31
+2	Set point (4 digits BCD)	Set point lower limit to upper limit

Receive Data Word Allocation (3rd Operand of PMCR)

None.

Write Alarm Value (Sequence No. 051)

Writes alarm value 1 and alarm value 2.

Send Data Word Allocation (2nd Operand of PMCR)

First word of send data	+0	Number of send data words	
	+1	(Undefined)	Unit No.
	+2	Alarm value 1	
	+3	Alarm value 2	

Offset	Contents (data format)	Data
+0	Number of send data words (4 digits BCD)	0004 (fixed)
+1	Unit No. (2 digits BCD)	00 to 31
+2	Alarm value 1 (4 digits BCD)	0000 to 999
+3	Alarm value 2 (4 digits BCD)	0000 to 9999

Receive Data Word Allocation (3rd Operand of PMCR)

None.

Write Proportional Band, Integral Time, and Derivative Time (Sequence No. 052)

Writes the proportional band, integral time, and derivative time.

Send Data Word Allocation (2nd Operand of PMCR)

First word of send data	+0	Number of send data words	
	+1	(Undefined)	Unit No.
	+2	Proportional band	
	+3	Integral time	
	+4	Derivative time	

Offset	Contents (data format)	Data
+0	Number of send data words (4 digits BCD)	0005 (fixed)
+1	Unit No. (2 digits BCD)	00 to 31
+2	Proportional band (4 digits BCD)	0001 to 9999
+3	Integral time (4 digits BCD)	0000 to 3999
+4	Derivative time (4 digits BCD)	0000 to 3999

Receive Data Word Allocation (3rd Operand of PMCR)
None.

Write Cooling Coefficient (Sequence No. 053)

Writes the cooling coefficient.

Send Data Word Allocation (2nd Operand of PMCR)

First word of send data	+0	Number of send data words	
	+1	(Undefined)	Unit No.
	+2	Cooling coefficient	

Offset	Contents (data format)	Data
+0	Number of send data words (4 digits BCD)	0003 (fixed)
+1	Unit No. (2 digits BCD)	00 to 31
+2	Cooling coefficient (4 digits BCD)	0001 to 9999

Receive Data Word Allocation (3rd Operand of PMCR)
None.

Write Dead Band (Sequence No. 054)

Writes the dead band.

Send Data Word Allocation (2nd Operand of PMCR)

First word of send data	+0	Number of send data words	
	+1	(Undefined)	Unit No.
	+2	Dead band	

Offset	Contents (data format)	Data
+0	Number of send data words (4 digits BCD)	0003 (fixed)
+1	Unit No. (2 digits BCD)	00 to 31
+2	Dead band (4 digits BCD)	0000 to 9999

Receive Data Word Allocation (3rd Operand of PMCR)
None.

Write Manual Reset Value (Sequence No. 055)

Writes the manual reset value.

Send Data Word Allocation (2nd Operand of PMCR)

First word of send data	+0	Number of send data words	
	+1	(Undefined)	Unit No.
	+2	Manual reset value	

Offset	Contents (data format)	Data
+0	Number of send data words (4 digits BCD)	0003 (fixed)
+1	Unit No. (2 digits BCD)	00 to 31
+2	Manual reset value (4 digits BCD)	0000 to 1000

Receive Data Word Allocation (3rd Operand of PMCR)
None.

Write Hysteresis (Sequence No. 056)

Writes the hysteresis for heating and for cooling.

Send Data Word Allocation (2nd Operand of PMCR)

First word of send data			
+0	Number of send data words		
+1	(Undefined)	Unit No.	
+2	Hysteresis (heating)		
+3	Hysteresis (cooling)		

Offset	Contents (data format)	Data
+0	Number of send data words (4 digits BCD)	0004 (fixed)
+1	Unit No. (2 digits BCD)	00 to 31
+2	Hysteresis (heating) (4 digits BCD)	0001 to 9999
+3	Hysteresis (cooling) (4 digits BCD)	0001 to 9999

Receive Data Word Allocation (3rd Operand of PMCR)

None.

Write Control Period (Sequence No. 057)

Writes the control period for heating and for cooling.

Send Data Word Allocation (2nd Operand of PMCR)

First word of send data			
+0	Number of send data words		
+1	(Undefined)	Unit No.	
+2	Control period (heating)		
+3	Control period (cooling)		

Offset	Contents (data format)	Data
+0	Number of send data words (4 digits BCD)	0004 (fixed)
+1	Unit No. (2 digits BCD)	00 to 31
+2	Control period (heating) (4 digits BCD)	0001 to 0099
+3	Control period (cooling) (4 digits BCD)	0001 to 0099

Receive Data Word Allocation (3rd Operand of PMCR)

None.

Write SP Ramp Time Unit and Set Value (Sequence No. 058)

Writes the SP ramp time unit and SP ramp set value.

Send Data Word Allocation (2nd Operand of PMCR)

First word of send data			
+0	Number of send data words		
+1	(Undefined)	Unit No.	
+2	SP ramp time unit		
+3	SP ramp set value		

Offset	Contents (data format)	Data
+0	Number of send data words (4 digits BCD)	0004 (fixed)
+1	Unit No. (2 digits BCD)	00 to 31
+2	SP ramp time unit (4 digits BCD)	0000:Minutes 0001:Hours
+3	SP ramp set value (4 digits BCD)	0000 to 9999

Receive Data Word Allocation (3rd Operand of PMCR)

None.

Write LBA Detection Time (Sequence No. 059)

Writes the LBA detection time.

Send Data Word Allocation (2nd Operand of PMCR)

First word of send data	+0	Number of send data words	
	+1	(Undefined)	Unit No.
	+2	LBA detection time	

Offset	Contents (data format)	Data
+0	Number of send data words (4 digits BCD)	0003 (fixed)
+1	Unit No. (2 digits BCD)	00 to 31
+2	LBA detection time (4 digits BCD)	0000 to 9999

Receive Data Word Allocation (3rd Operand of PMCR)

None.

Write MV at Stop Time and at PV Error (Sequence No. 060)

Writes the MV at stop time and the MV at PV error.

Send Data Word Allocation (2nd Operand of PMCR)

First word of send data	+0	Number of send data words	
	+1	(Undefined)	Unit No.
	+2	MV at stop time	
	+3	MV at PV error	

Offset	Contents (data format)	Data
+0	Number of send data words (4 digits BCD)	0004 (fixed)
+1	Unit No. (2 digits BCD)	00 to 31
+2	MV at stop time (4 digits BCD)	0000 to 1050
+3	MV at PV error (4 digits BCD)	0000 to 1050

Receive Data Word Allocation (3rd Operand of PMCR)

None.

Write MV Limits (Sequence No. 061)

Writes the MV upper limit, MV lower limit, and MV change rate limit.

Send Data Word Allocation (2nd Operand of PMCR)

First word of send data	+0	Number of send data words	
	+1	(Undefined)	Unit No.
	+2	MV upper limit	
	+3	MV lower limit	
	+4	MV change rate limit	

Offset	Contents (data format)	Data
+0	Number of send data words (4 digits BCD)	0005 (fixed)
+1	Unit No. (2 digits BCD)	00 to 31
+2	MV upper limit (4 digits BCD)	MV lower limit +1 to 1050 Heating/cooling control time: 0000 to 1050
+3	MV lower limit (4 digits BCD)	0000 to MV upper limit –1
+4	MV change rate limit (4 digits BCD)	0000 to 1000

Receive Data Word Allocation (3rd Operand of PMCR)

None.

Write Input Digital Filter (Sequence No. 062)

Writes the input digital filter.

Send Data Word Allocation (2nd Operand of PMCR)

First word of send data	+0	Number of send data words	
	+1	(Undefined)	Unit No.
	+2	Input digital filter	

Offset	Contents (data format)	Data
+0	Number of send data words (4 digits BCD)	0003 (fixed)
+1	Unit No. (2 digits BCD)	00 to 31
+2	Input digital filter (4 digits BCD)	0000 to 9999

Receive Data Word Allocation (3rd Operand of PMCR)

None.

Write Alarm Hysteresis (Sequence No. 063)

Writes the alarm 1 hysteresis and alarm 2 hysteresis.

Send Data Word Allocation (2nd Operand of PMCR)

First word of send data	+0	Number of send data words	
	+1	(Undefined)	Unit No.
	+2	Alarm 1 hysteresis	
	+3	Alarm 2 hysteresis	

Offset	Contents (data format)	Data
+0	Number of send data words (4 digits BCD)	0004 (fixed)
+1	Unit No. (2 digits BCD)	00 to 31
+2	Alarm 1 hysteresis (4 digits BCD)	0001 to 9999
+3	Alarm 2 hysteresis (4 digits BCD)	0001 to 9999

Receive Data Word Allocation (3rd Operand of PMCR)

None.

Write Input Shift Value (Sequence No. 064)

Writes the input shift upper limit and input shift lower limit.

Send Data Word Allocation (2nd Operand of PMCR)

First word of send data	+0	Number of send data words	
	+1	(Undefined)	Unit No.
	+2	Input shift upper limit	
	+3	Input shift lower limit	

Offset	Contents (data format)	Data
+0	Number of send data words (4 digits BCD)	0004 (fixed)
+1	Unit No. (2 digits BCD)	00 to 31
+2	Input shift upper limit (4 digits BCD)	0000 to 9999
+3	Input shift lower limit (4 digits BCD)	0000 to 9999

Receive Data Word Allocation (3rd Operand of PMCR)

None.

Write Level 0 Parameters (Sequence No. 065)

Writes parameters (set points) in level 0 to multiple units.

Send Data Word Allocation (2nd Operand of PMCR)

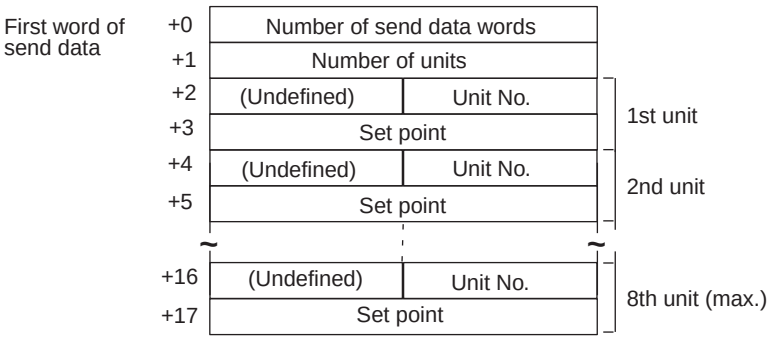

Offset	Contents (data format)	Data
+0	Number of send data words (4 digits BCD)	Number of units × 2 + 2
+1	Number of units (4 digits BCD)	0001 to 0008
+2	1st unit Unit No. (2 digits BCD)	00 to 31
+3	1st unit Set point (4 digits BCD)	Set point lower limit to upper limit
	• • •	
+17 (max.)	8th unit Set point (4 digits BCD)	Set point lower limit to upper limit

Receive Data Word Allocation (3rd Operand of PMCR)

None.

Write Level 1 Parameters 1 (Sequence No. 066)

Writes parameters in level 1 (alarm value 1, alarm value 2, alarm value 3, proportional band, integral time, and derivative time) to multiple units.

Send Data Word Allocation (2nd Operand of PMCR)

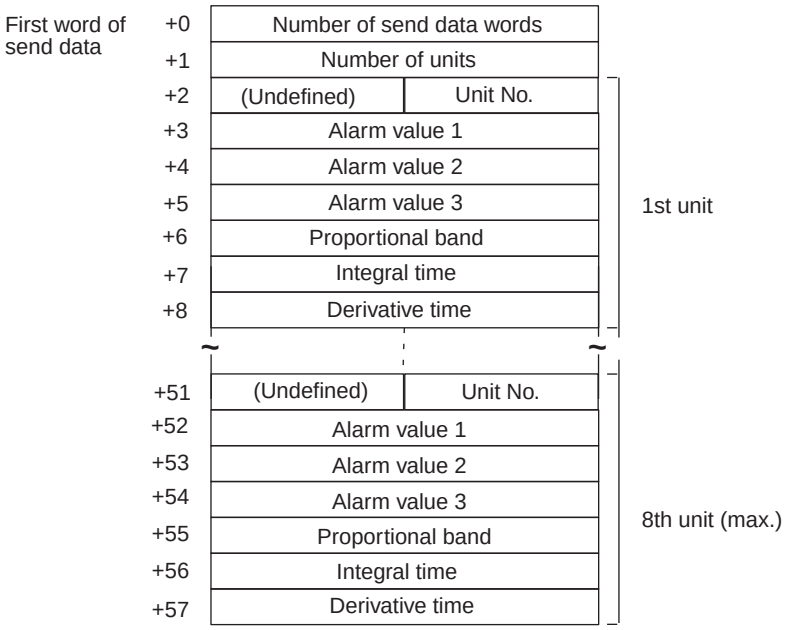

Offset	Contents (data format)	Data
+0	Number of send data words (4 digits BCD)	Number of units × 7 + 2
+1	Number of units (4 digits BCD)	0001 to 0008
+2	1st unit Unit No. (2 digits BCD)	00 to 31
+3	1st unit Alarm value 1 (4 digits BCD)	A999 to 9999 F indicates a negative value and A indicates –1.
+4	1st unit Alarm value 2 (4 digits BCD)	A999 to 9999 F indicates a negative value and A indicates –1.
+5	1st unit Alarm value 3 (4 digits BCD)	A999 to 9999 F indicates a negative value and A indicates –1.
+6	1st unit Proportional band (4 digits BCD)	0001 to 9999
+7	1st unit Integral time (4 digits BCD)	0000 to 3999
+8	1st unit Derivative time (4 digits BCD)	0000 to 3999
	• • •	
+57 (max.)	8th unit Derivative time (4 digits BCD)	0000 to 3999

Receive Data Word Allocation (3rd Operand of PMCR)

None.

Write Level 1 Parameter 2 (Sequence No. 067)

Writes parameters in level 1 (cooling coefficient, dead band, manual reset value, hysteresis (heating), hysteresis (cooling), control period (heating), and control period (cooling)) to multiple units.

Send Data Word Allocation (2nd Operand of PMCR)

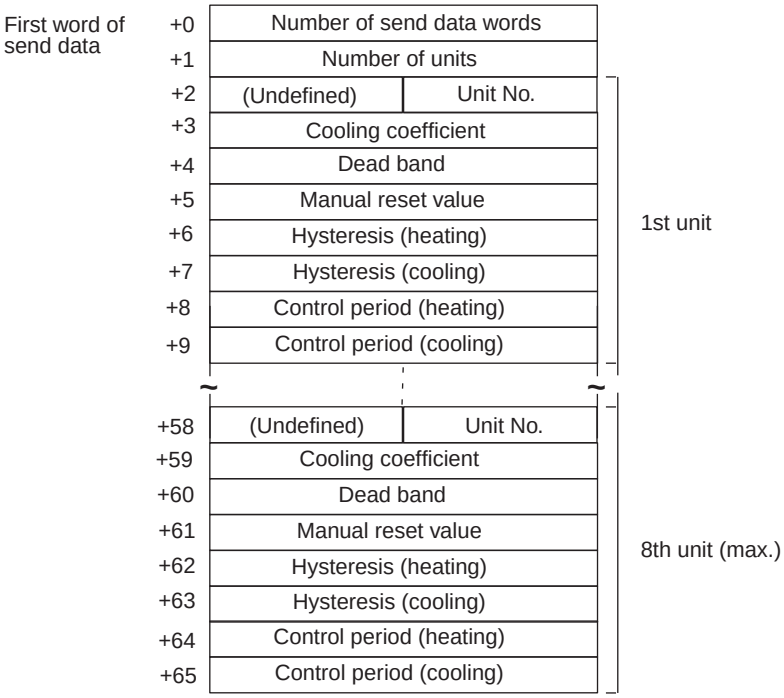

Offset	Contents (data format)	Data
+0	Number of send data words (4 digits BCD)	Number of units × 8 + 2
+1	Number of units (4 digits BCD)	0001 to 0008
+2	1st unit Unit No. (2 digits BCD)	00 to 31
+3	1st unit Cooling coefficient (4 digits BCD)	0001 to 9999
+4	1st unit Dead band (4 digits BCD)	0000 to 9999
+5	1st unit Manual reset value (4 digits BCD)	0000 to 1000
+6	1st unit Hysteresis (heating) (4 digits BCD)	0001 to 9999
+7	1st unit Hysteresis (cooling) (4 digits BCD)	0001 to 9999
+8	1st unit Control period (heating) (4 digits BCD)	0001 to 0099
+9	1st unit Control period (cooling) (4 digits BCD)	0001 to 0099
	• • •	
+65 (max.)	8th unit Control period (cooling) (4 digits BCD)	0001 to 0099

Receive Data Word Allocation (3rd Operand of PMCR)

None.

Write Level 2 Parameters 1 (Sequence No. 068)

Writes parameters in level 2 (SP ramp time unit, SP ramp set value, LBA detection time, MV at stop time, MV at PV error, MV upper limit, MV lower limit, and MV change rate limit) to multiple units.

Send Data Word Allocation (2nd Operand of PMCR)

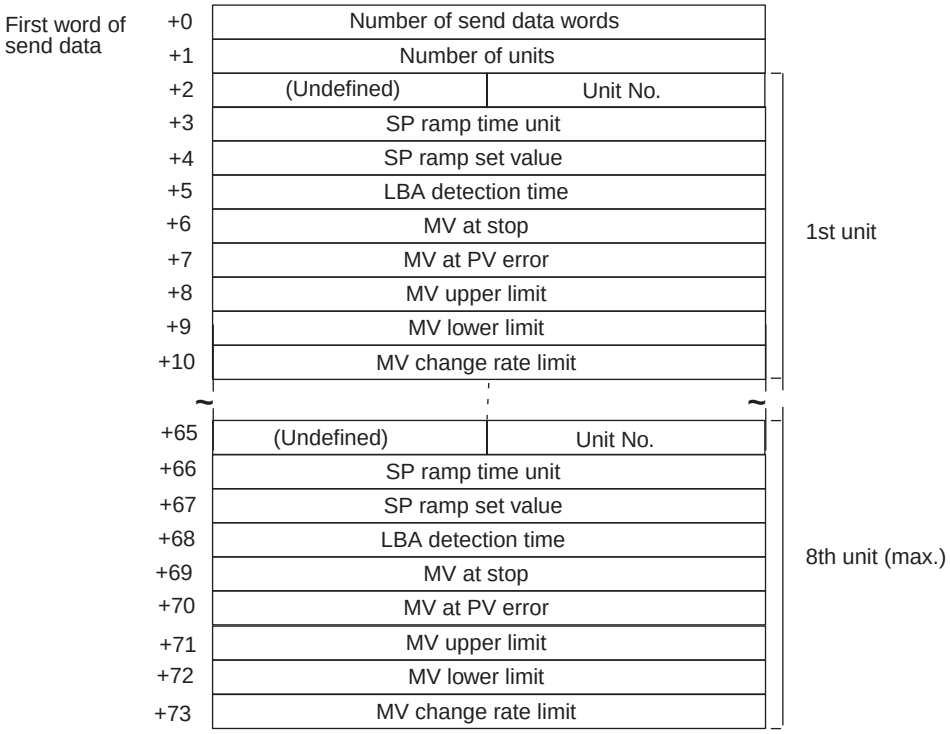

Offset	Contents (data format)	Data
+0	Number of send data words (4 digits BCD)	Number of units × 9 + 2
+1	Number of units (4 digits BCD)	0001 to 0008
+2	1st unit Unit No. (2 digits BCD)	00 to 31
+3	1st unit SP ramp time unit (4 digits BCD)	0000 to 0001
+4	1st unit SP ramp set value (4 digits BCD)	0000 to 9999
+5	1st unit LBA detection time (4 digits BCD)	0000 to 9999
+6	1st unit MV at stop (4 digits BCD)	0000 to 1050
+7	1st unit MV at PV error (4 digits BCD)	0000 to 1050
+8	1st unit MV upper limit (4 digits BCD)	MV lower limit +1 to 1050
+9	1st unit MV lower limit (4 digits BCD)	0000 to MV upper limit –1
+10	1st unit MV change rate limit (4 digits BCD)	0000 to 1000
	• • •	
+73 (max.)	8th unit MV change rate limit (4 digits BCD)	0000 to 1000

Receive Data Word Allocation (3rd Operand of PMCR)

None.

Write Level 2 Parameters 2 (Sequence No. 069)

Writes parameters in level 2 (input digital filter, alarm 1 hysteresis, alarm 2 hysteresis, alarm 3 hysteresis, input shift upper limit, and input shift lower limit) to multiple units.

Send Data Word Allocation (2nd Operand of PMCR)

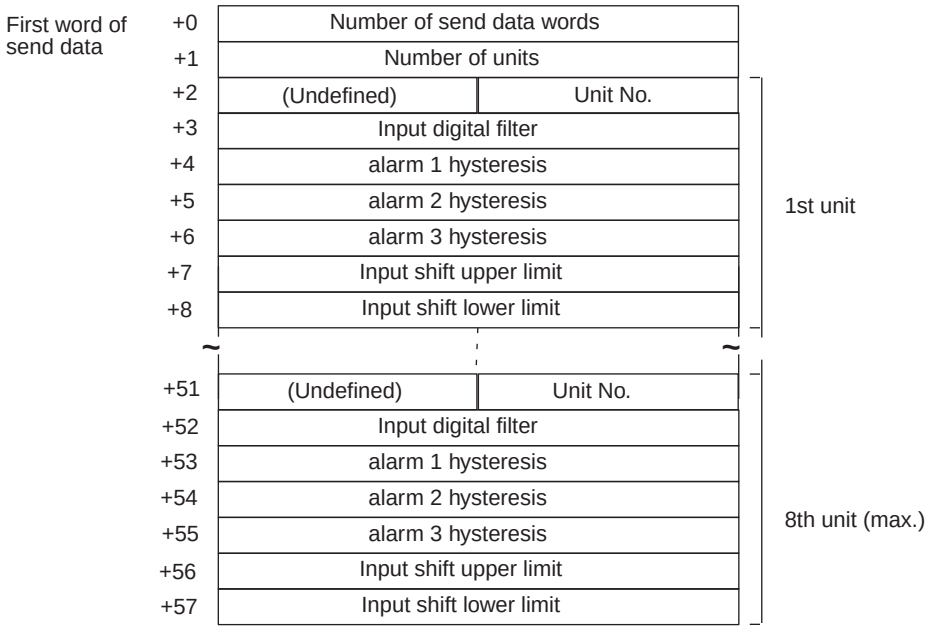

Offset	Contents (data format)	Data
+0	Number of send data words (4 digits BCD)	Number of units × 7 + 2
+1	Number of units (4 digits BCD)	0001 to 0008
+2	1st unit Unit No. (2 digits BCD)	00 to 31
+3	1st unit Input digital filter (4 digits BCD)	0000 to 9999
+4	1st unit Alarm 1 hysteresis (4 digits BCD)	0001 to 9999
+5	1st unit Alarm 2 hysteresis (4 digits BCD)	0001 to 9999
+6	1st unit Alarm 3 hysteresis (4 digits BCD)	0001 to 0099
+7	1st unit Input shift upper limit (4 digits BCD)	000 to 9999
+8	1st unit Input shift lower limit (4 digits BCD)	000 to 9999
	• • •	
+57 (max.)	8th unit Input shift lower limit (4 digits BCD)	000 to 9999

Receive Data Word Allocation (3rd Operand of PMCR)

None.

General-purpose Write (Sequence No. 070)

Writes the specified parameter.

Send Data Word Allocation (2nd Operand of PMCR)

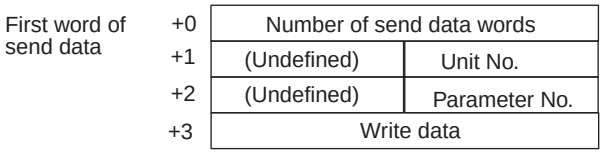

Offset	Contents (data format)	Data
+0	Number of send data words (4 digits BCD)	0004 (fixed)
+1	Unit No. (2 digits BCD)	00 to 31
+2	Parameter No. (2 digits BCD)	Refer to the manual of E5□K.
+3	Write data (4 digits BCD)	0000 to 9999

Receive Data Word Allocation (3rd Operand of PMCR)

None.

Note To write parameters in the setup mode or extended mode, execute Switch to Level 1 (Sequence No. 075) in advance.

Switch to Level 0 (Software Reset) (Sequence No. 071)

Resets the operation of the E5□K and waits until communications are enabled. This sequence can be executed for multiple units.

Send Data Word Allocation (2nd Operand of PMCR)

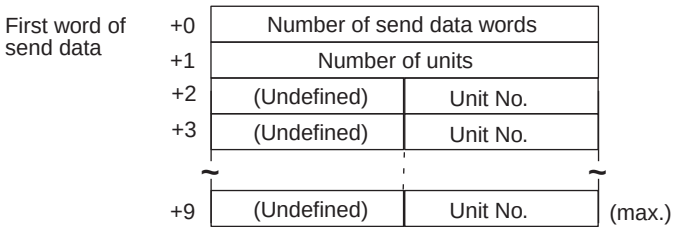

Offset	Contents (data format)	Data
+0	Number of send data words (4 digits BCD)	Number of units + 2
+1	Number of units (4 digits BCD)	0001 to 0008
+2 to 9	Unit No. (2 digits BCD)	00 to 31

Receive Data Word Allocation (3rd Operand of PMCR)

None.

Note When this sequence is executed, a software reset command is issued and the operation of the E5□K is reset (equivalent to turning on the power supply). About five seconds will be required until communications are enabled.

Run/Stop (Sequence No. 072)

Switches the mode to Run or Stop according to the command code. This sequence can be executed for multiple units.

Send Data Word Allocation (2nd Operand of PMCR)

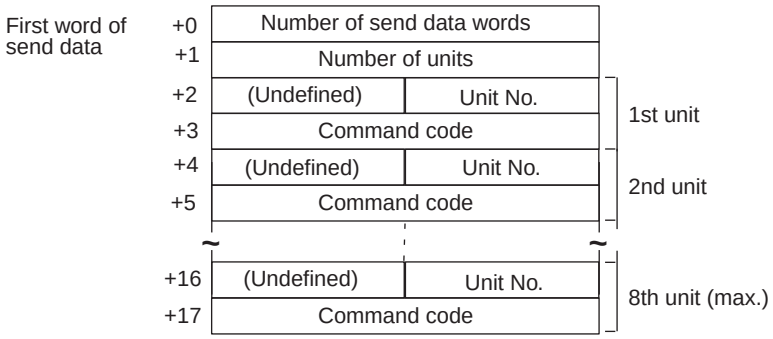

Offset	Contents (data format)	Data
+0	Number of send data words (4 digits BCD)	Number of units × 2 + 2
+1	Number of units (4 digits BCD)	0001 to 0008
+2	1st unit Unit No. (2 digits BCD)	00 to 31
+3	1st unit Command code (4 digits BCD)	0000: Run 0001: Stop
	• • •	
+17 (max.)	8th unit Command code (4 digits BCD)	0000: Run 0001: Stop

Receive Data Word Allocation (3rd Operand of PMCR)

None.

Remote/Local (Sequence No. 073)

Switches to remote operation or local operation according to the command mode. This sequence can be executed for multiple units.

Send Data Word Allocation (2nd Operand of PMCR)

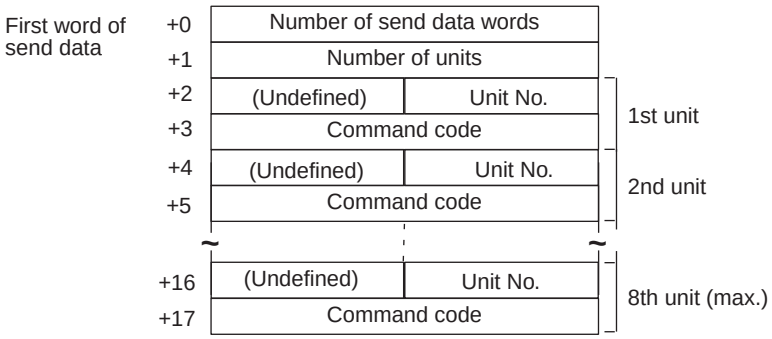

Offset	Contents (data format)	Data
+0	Number of send data words (4 digits BCD)	Number of units × 2 + 2
+1	Number of units (4 digits BCD)	0001 to 0008
+2	1st unit Unit No. (2 digits BCD)	00 to 31
+3	1st unit Command code (4 digits BCD)	0000: Local 0001: Remote
	• • •	
+17 (max.)	8th unit Command code (4 digits BCD)	0000: Local 0001: Remote

Receive Data Word Allocation (3rd Operand of PMCR)

None.

Execute/Cancel AT (Sequence No. 074)

Executes or cancels AT (autotuning) according to the command code. This sequence can be executed for multiple units.

Send Data Word Allocation (2nd Operand of PMCR)

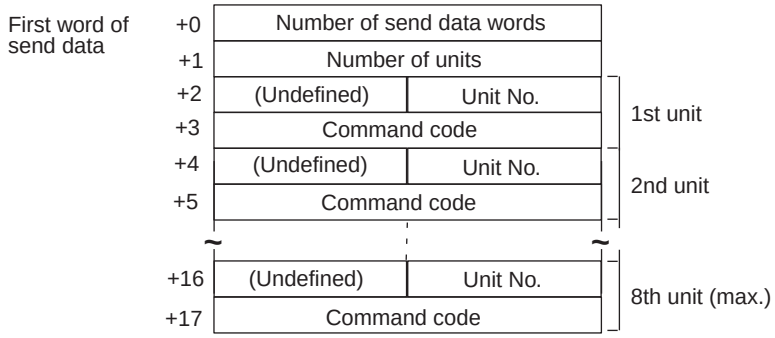

Offset	Contents (data format)	Data
+0	Number of send data words (4 digits BCD)	Number of units × 2 + 2
+1	Number of units (4 digits BCD)	0001 to 0008
+2	1st unit Unit No. (2 digits BCD)	00 to 31
+3	1st unit Command code (4 digits BCD)	0000: Stop 0001: Execute AT 40% 0002: Execute AT 100%
	• • •	
+17 (max.)	8th unit Command code (4 digits BCD)	0000: Stop 0001: Execute AT 40% 0002: Execute AT 100%

Receive Data Word Allocation (3rd Operand of PMCR)

None.

Switch to Level 1 (Sequence No. 075)

Switches the setting level to level 1 (setup mode, extended mode). This sequence can be executed for multiple units.

Send Data Word Allocation (2nd Operand of PMCR)

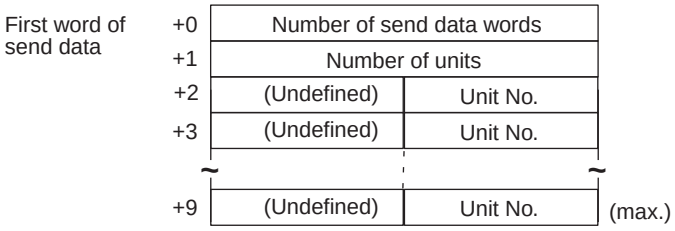

Offset	Contents (data format)	Data
+0	Number of send data words (4 digits BCD)	Number of units + 2
+1	Number of units (4 digits BCD)	0001 to 0008
+2 to 9	Unit No. (2 digits BCD)	00 to 31

Receive Data Word Allocation (3rd Operand of PMCR)

None.

Software Reset (Sequence No. 076)

Resets the operation of the E5□K (equivalent to turning on the power supply). This sequence can be executed for multiple units.

Send Data Word Allocation (2nd Operand of PMCR)

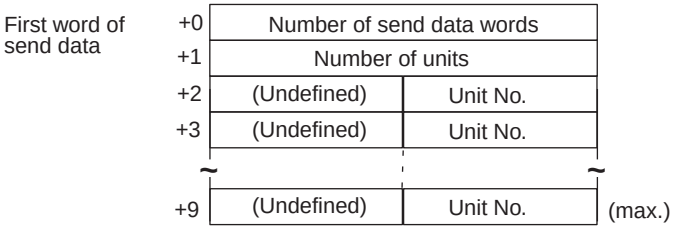

Offset	Contents (data format)	Data
+0	Number of send data words (4 digits BCD)	Number of units + 2
+1	Number of units (4 digits BCD)	0001 to 0008
+2 to 9	Unit No. (2 digits BCD)	00 to 31

Receive Data Word Allocation (3rd Operand of PMCR)

None.

Note Communications with the E5□K are disabled for about five seconds after this sequence is executed.

Appendix E

E5ZE Temperature Controller Read Protocol

The E5ZE Temperature Controller Read Protocol reads and controls various parameters in remote mode for the Temperature Controller connected to the Serial Communications Board via RS-232C or RS-422A/485 cable.

Note All sequences in this appendix operate on memory bank 0 and cannot be used for other memory banks.

Structure of the Protocol

The following table shows the structure of the E5ZE Temperature Controller Read Protocol

Sequence No.	Communications sequence name	Function	Ladder interface	
			Send word allocation	Receive word allocation
100	Read set point	Reads the set points.	Yes	Yes
101	Read process value	Reads the process values.	Yes	Yes
102	Read output value	Reads the output values.	Yes	Yes
103	Read set point, process value, and output value	Reads the set points, process values, and output values.	Yes	Yes
104	Read proportional band, integral time, and derivative time	Reads the proportional bands, integral times, and derivative times.	Yes	Yes
105	Read control period	Reads the control periods.	Yes	Yes
106	Read output mode	Reads the output modes.	Yes	Yes
107	Read alarm mode	Reads the alarm modes.	Yes	Yes
108	Read alarm temperature	Reads the alarm temperatures.	Yes	Yes
109	Read hysteresis	Reads the hysteresis.	Yes	Yes
110	Read operation status	Reads the operation status.	Yes	Yes
111	Read error status	Reads the error status.	Yes	Yes
112	Read setting unit	Reads the setting units.	Yes	Yes
113	Read input shift value	Reads the input shift values.	Yes	Yes
114	Read manual reset value	Reads the manual reset values.	Yes	Yes
115	Read ramp value	Reads the ramp values.	Yes	Yes
116	Read present set point	Reads the present set points.	Yes	Yes
117	Read output value limits	Reads the output value limits.	Yes	Yes
118	Read output value change rate limit	Reads the output value change rate limits.	Yes	Yes
119	Read HB alarm and HS alarm valid channels	Reads the HB alarm and HS alarm valid channels.	Yes	Yes
120	Read heater burnout/SSR failure detection currents	Reads the heater burnout/SSR failure detection currents.	Yes	Yes
121	Read heater current and SSR leakage current	Reads the heater currents and SSR leakage currents.	Yes	Yes
122	Read dead band/overlap band	Reads the dead bands and overlap bands.	Yes	Yes
123	Read cooling coefficient	Reads the cooling coefficients.	Yes	Yes

Note Ladder Interface Settings

YES: User settings are required for the 2nd or 3rd operands of PMCR.

NO: Send word allocation: Set the constant 0000 for the 2nd operand (S).

Receive word allocation: Set a dummy word (e.g., DM 0000) address for the 3rd operand (D).

Connections

This section shows connections for using the E5ZE Temperature Controller Read Protocol.

RS-232C Connections

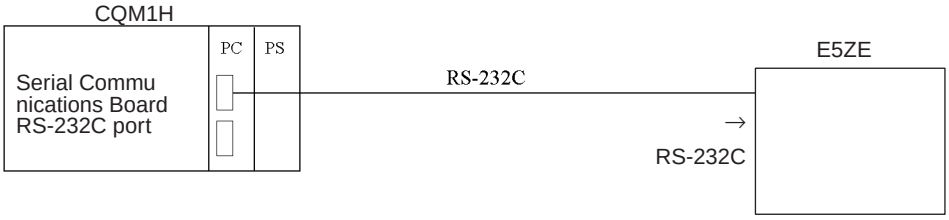

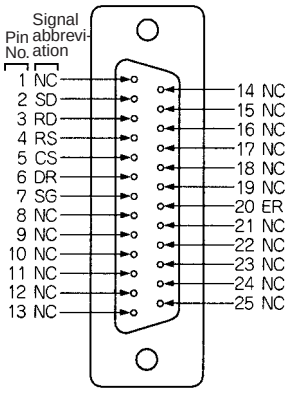

Signal name	Abbreviation	Signal direction	Pin No.
Signal ground or common return line	SG	–	7
Send data	SD	Output	2
Receive data	RD	Input	3
Request to send	RS	Output	4
Clear to send	CS	Input	5
Data set ready	DR	Input	6
Data terminal ready	ER	Output	20
Disabled (Do not connect.)	NC	–	1, 8 to 19, 21 to 25

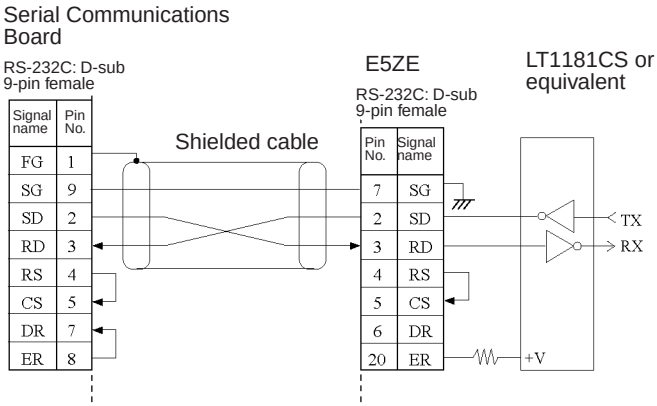

Note 1. The maximum communications cable length is 15 m. Use a shielded twisted-pair cable (AWG28 or greater) for the cable.

2. Use a 25-pin D-sub Plug (OMRON XM2A-2501).

3. Use XM2S-2511 Hood (OMRON) or an equivalent.

RS422/485 Connections

- **RS-485**

Pin No.	Signal name	Abbreviation	Signal direction
1	Disabled (Do not connect.)	–	–
2	Disabled (Do not connect.)	–	–
3	Signal ground	SG	–
4	Terminal B (+ side)	B	I/O
5	Terminal A (– side)	A	I/O

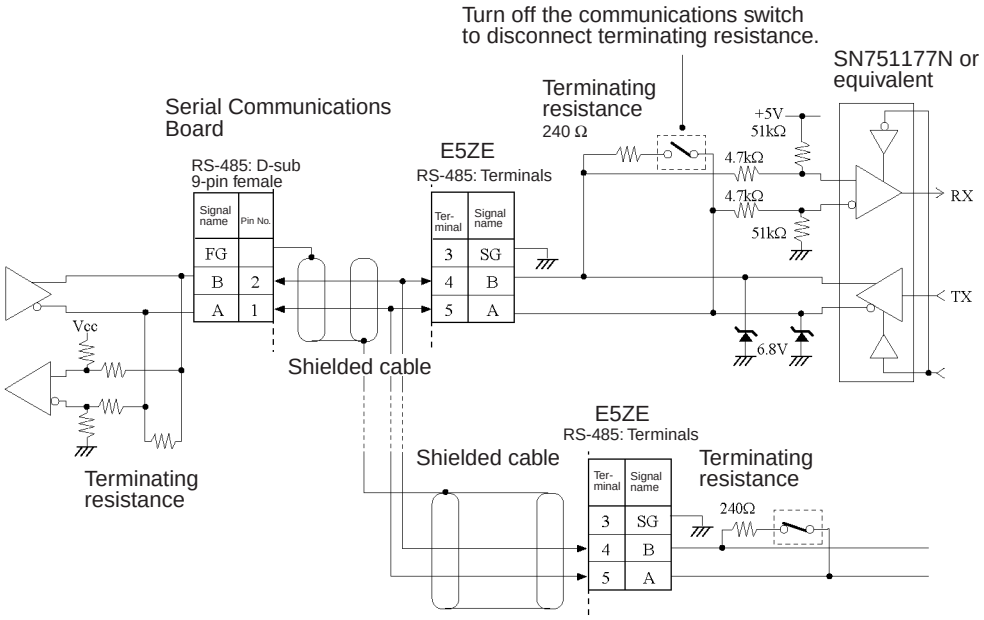

Note Terminal block pins 1 and 2 cannot be connected. If these blocks are used, operation of the E5ZE may fail.

- **RS-422A**

Pin No.	Signal name	Abbreviation	Signal direction
1	Receive data B	RDB	Input
2	Receive data A	RDA	Input
3	Signal ground	SG	–
4	Send data B	SDB	Output
5	Send data A	SDA	Output

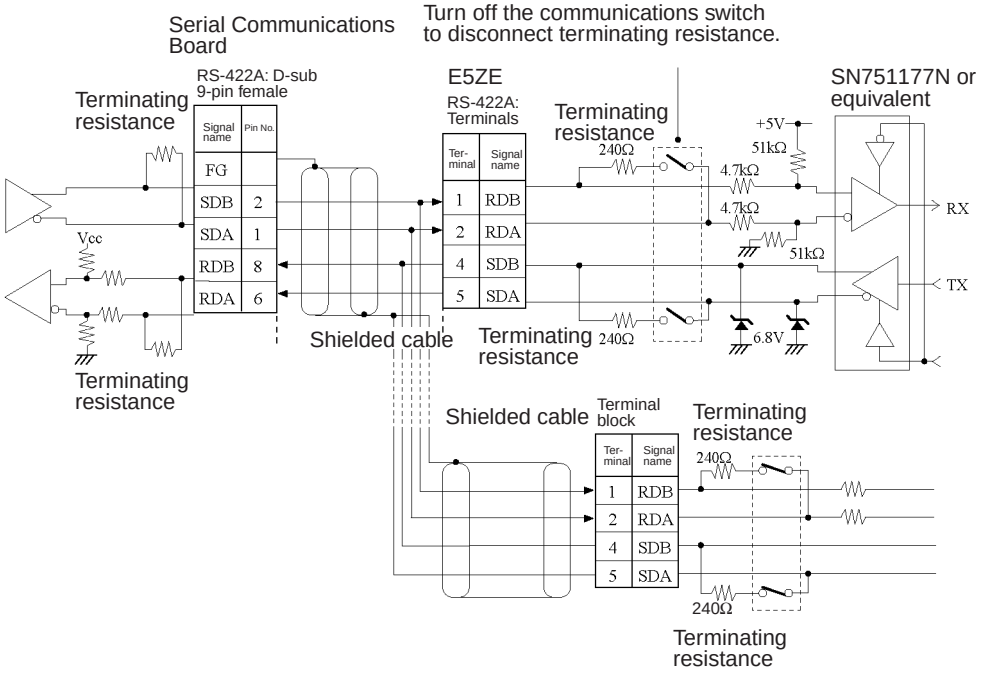

Switch Settings

This section shows the switch settings for using the E5ZE Temperature Controller Read Protocol.

Communications Parameter DIP Switch

Pins 3 and 4: Terminating resistance
Pins 1 and 2: RS-422A/RS-485

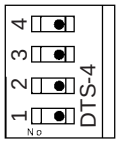

▲ Factory defaults: All OFF

Pins	Parameter		RS-422A	RS-485
3 and 4	Terminating resistance	ON	ON ▶ 4 3 ON ▶	OFF ▶ 4 3 ON ▶
		OFF	OFF ▶ 4 3 OFF ▶	OFF ▶ 4 3 OFF ▶
1 and 2	RS-422A or RS-485		OFF ▶ 2 1 OFF ▶ No	ON ▶ 2 1 ON ▶ No

Unit Number Switch

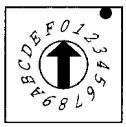

Setting	0	1	2	3	4	5	6	7	8	9	A	B	C	D	E	F
Unit No.	00	01	02	03	04	05	06	07	08	09	0A	0B	0C	0D	0E	0F

▲ Factory defaults

Baud Rate DIP Switch

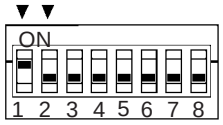

Factory default: 9,600 bps
(pin 1 ON, pin 2 OFF)

Baud rate (bps)	19,200	9,600	4,800	2,400
Pins 1 and 2	ON 1 2 OFF OFF	ON 1 2 ON OFF	ON 1 2 OFF ON	ON 1 2 ON ON

Read Set Point (Sequence No. 100)

Reads the set points and stores the results in the specified words.

Send Data Word Allocation (2nd Operand of PMCR)

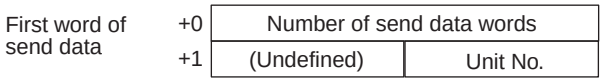

Offset	Contents (data format)	Data
+0	Number of send data words (4 digits BCD)	0002 (fixed)
+1	Unit No. (2 digits Hex)	00 to 0F

Receive Data Word Allocation (3rd Operand of PMCR)

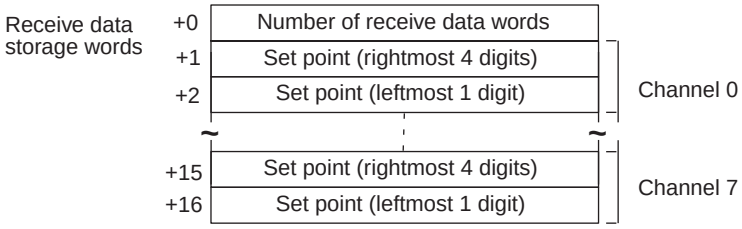

Offset	Contents (data format)	Data
+0	Number of receive data words (4 digits BCD)	0017
+1	Channel 0 Set point (rightmost 4 digits) (4 digits BCD)	Varies according to the temperature sensor type. Refer to the manual for the E5ZE. F indicates a negative value.
+2	Channel 0 Set point (leftmost 1 digit) (1 digit BCD)	
	• • •	
+15	Channel 7 Set point (rightmost 4 digits) (4 digits BCD)	Varies according to the temperature sensor type. Refer to the manual for the E5ZE. F indicates a negative value.
+16	Channel 7 Set point (leftmost 1 digit) (1 digit BCD)	

Read Process Value (Sequence No. 101)

Reads the process values and stores the results in the specified words.

Send Data Word Allocation (2nd Operand of PMCR)

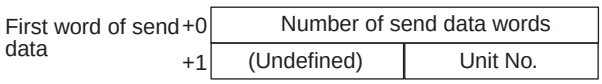

Offset	Contents (data format)	Data
+0	Number of send data words (4 digits BCD)	0002 (fixed)
+1	Unit No. (2 digits Hex)	00 to 0F

Receive Data Word Allocation (3rd Operand of PMCR)

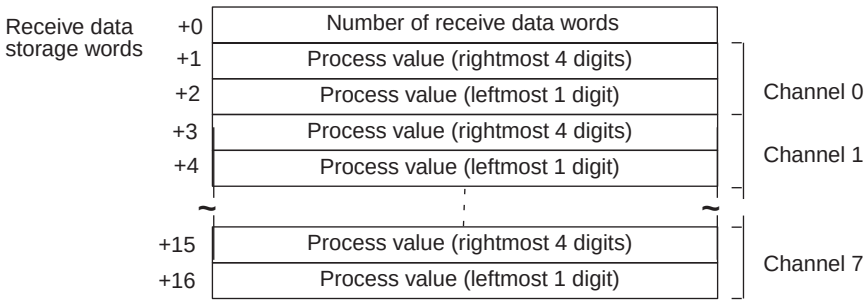

Offset	Contents (data format)	Data
+0	Number of receive data words (4 digits BCD)	0017
+1	Channel 0 Process value (rightmost 4 digits) (4 digits BCD)	Varies according to the temperature sensor type. Refer to the manual for the E5ZE. F indicates a negative value.
+2	Channel 0 Process value (leftmost 1 digit) (1 digit BCD)	
	• • •	
+15	Channel 7 Process value (rightmost 4 digits) (4 digits BCD)	Varies according to the temperature sensor type. Refer to the manual for the E5ZE. F indicates a negative value.
+16	Channel 7 Process value (leftmost 1 digit) (1 digit BCD)	

Read Output Values (Sequence No. 102)

Reads the output values of the control outputs and stores the results in the specified words.

Send Data Word Allocation (2nd Operand of PMCR)

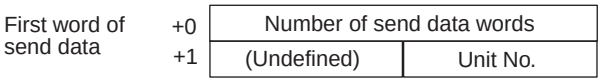

Offset	Contents (data format)	Data
+0	Number of send data words (4 digits BCD)	0002 (fixed)
+1	Unit No. (2 digits Hex)	00 to 0F

Receive Data Word Allocation (3rd Operand of PMCR)

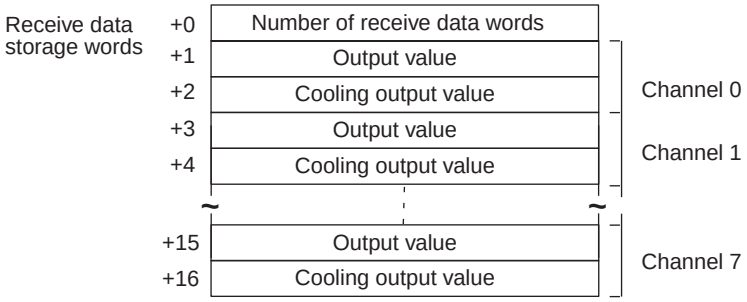

Offset	Contents (data format)	Data
+0	Number of receive data words (4 digits BCD)	0017
+1	Channel 0 Output value (4 digits BCD)	0000 to 1000
+2	Channel 0 Cooling output value (4 digits BCD)	0000 to 1000
+3	Channel 1 Output value (4 digits BCD)	0000 to 1000
+4	Channel 1 Cooling output value (4 digits BCD)	0000 to 1000
	• • •	
+15	Channel 7 Output value (4 digits BCD)	0000 to 1000
+16	Channel 7 Cooling output value (4 digits BCD)	0000 to 1000

Read Set Point, Process Value, and Output Value (Sequence No. 103)

Reads the set points, process values, and output values and stores the results in the specified words.

Send Data Word Allocation (2nd Operand of PMCR)

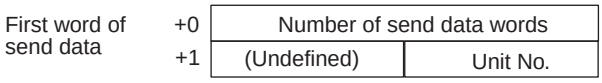

Offset	Contents (data format)	Data
+0	Number of send data words (4 digits BCD)	0002 (fixed)
+1	Unit No. (2 digits Hex)	00 to OF

Receive Data Word Allocation (3rd Operand of PMCR)

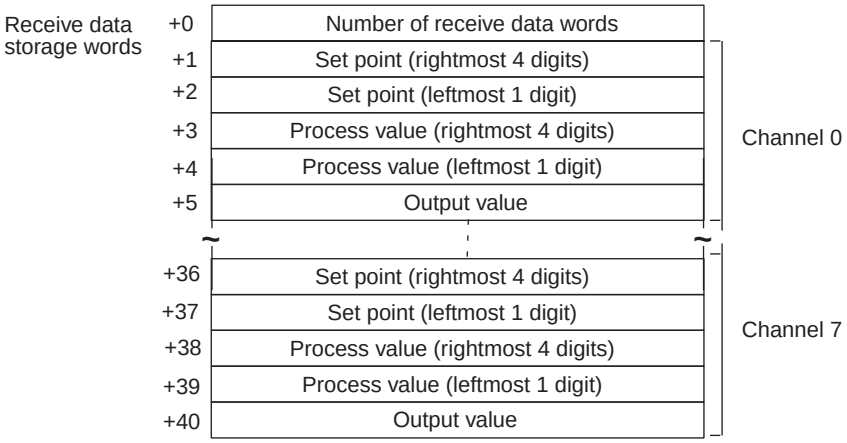

Offset	Contents (data format)	Data
+0	Number of receive data words (4 digits BCD)	0041
+1	Channel 0 Set point (rightmost 4 digits) (4 digits BCD)	Varies according to the temperature sensor type. Refer to the manual for the E5ZE.
+2	Channel 0 Set point (leftmost 1 digit) (1 digit BCD)	
+3	Channel 0 Process value (rightmost 4 digits) (4 digits BCD)	Varies according to the temperature sensor type. Refer to the manual for the E5ZE.
+4	Channel 0 Process value (leftmost 1 digit) (1 digit BCD)	
+5	Channel 0 Output value (4 digits BCD)	0000 to 1000
	• • •	
+36	Channel 7 Set point (rightmost 4 digits) (4 digits BCD)	Varies according to the temperature sensor type. Refer to the manual for the E5ZE.
+37	Channel 7 Set point (leftmost 1 digit) (1 digit BCD)	
+38	Channel 7 Process value (rightmost 4 digits) (4 digits BCD)	Varies according to the temperature sensor type. Refer to the manual for the E5ZE.
+39	Channel 7 Process value (leftmost 1 digit) (1 digit BCD)	
+40	Channel 0 Output value (4 digits BCD)	0000 to 1000

Read Proportional Band, Integral Time, and Derivative Time (Sequence No. 104)

Reads the proportional bands (constant P), integral times (constant I), and derivative times (Constant D) and stores the results in the specified words.

Send Data Word Allocation (2nd Operand of PMCR)

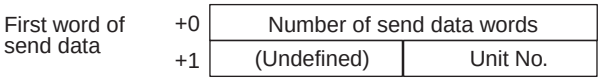

Offset	Contents (data format)	Data
+0	Number of send data words (4 digits BCD)	0002 (fixed)
+1	Unit No. (2 digits Hex)	00 to 0F

Receive Data Word Allocation (3rd Operand of PMCR)

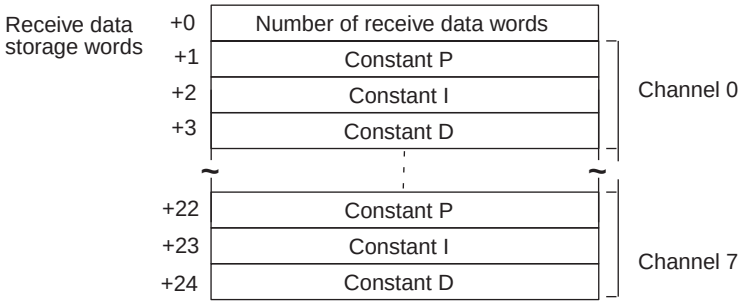

Offset	Contents (data format)	Data
+0	Number of receive data words (4 digits BCD)	0025
+1	Channel 0 Constant P (4 digits BCD)	0000 to 9999
+2	Channel 0 Constant I (4 digits BCD)	0000 to 3999
+3	Channel 0 Constant D (4 digits BCD)	0000 to 3999
	• • •	
+22	Channel 7 Constant P (4 digits BCD)	0000 to 9999
+2 3	Channel 7 Constant I (4 digits BCD)	0000 to 3999
+24	Channel 7 Constant D (4 digits BCD)	0000 to 3999

Read Control Period (Sequence No. 105)

Reads the control periods and stores the results in the specified words.

Send Data Word Allocation (2nd Operand of PMCR)

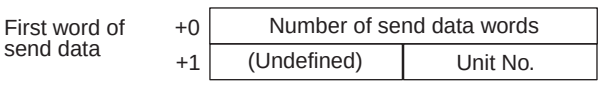

Offset	Contents (data format)	Data
+0	Number of send data words (4 digits BCD)	0002 (fixed)
+1	Unit No. (2 digits Hex)	00 to 0F

Receive Data Word Allocation (3rd Operand of PMCR)

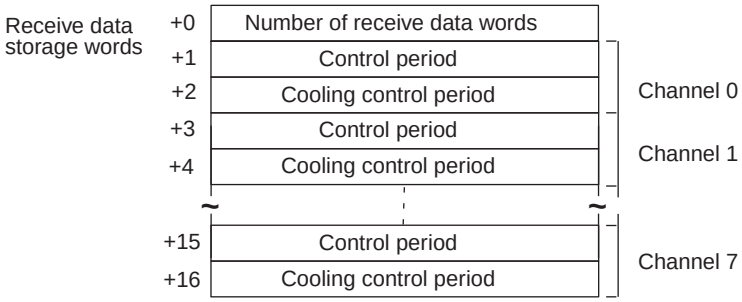

Offset	Contents (data format)	Data
+0	Number of receive data words (4 digits BCD)	0017
+1	Channel 0 Control period (4 digits BCD)	0001 to 0099
+2	Channel 0 Cooling control period (4 digits BCD)	0001 to 0099
	• • •	
+15	Channel 7 Control period (4 digits BCD)	0001 to 0099
+16	Channel 7 Cooling control period (4 digits BCD)	0001 to 0099

Read Output Mode (Sequence No. 106)

Reads the output modes (normal/reverse) and stores the results in the specified words.

Send Data Word Allocation (2nd Operand of PMCR)

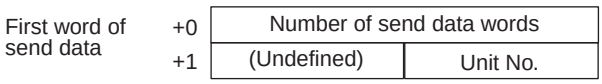

Offset	Contents (data format)	Data
+0	Number of send data words (4 digits BCD)	0002 (fixed)
+1	Unit No. (2 digits Hex)	00 to 0F

Receive Data Word Allocation (3rd Operand of PMCR)

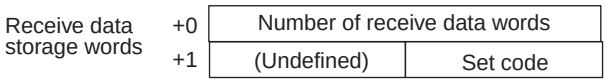

Offset	Contents (data format)	Data
+0	Number of receive data words (4 digits BCD)	0002
+1	Set code (2 digits Hex)	00 to FF

Read Alarm Mode (Sequence No. 107)

Reads the alarm modes and stores the results in the specified words.

Send Data Word Allocation (2nd Operand of PMCR)

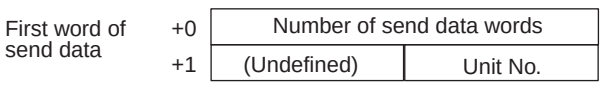

Offset	Contents (data format)	Data
+0	Number of send data words (4 digits BCD)	0002 (fixed)
+1	Unit No. (2 digits Hex)	00 to 0F

Receive Data Word Allocation (3rd Operand of PMCR)

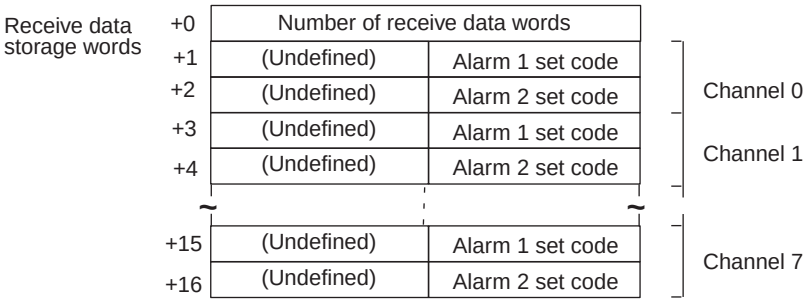

Offset	Contents (data format)	Data
+0	Number of receive data words (4 digits BCD)	0017
+1	Channel 0 Alarm 1 set code (2 digits Hex)	00 to 0C
+2	Channel 0 Alarm 2 set code (2 digits Hex)	00 to 0C
	• • •	
+15	Channel 7 Alarm 1 set code (2 digits Hex)	00 to 0C
+16	Channel 7 Alarm 2 set code (2 digits Hex)	00 to 0C

Read Alarm Temperatures (Sequence No. 108)

Reads the alarm temperatures and stores the results in the specified words.

Send Data Word Allocation (2nd Operand of PMCR)

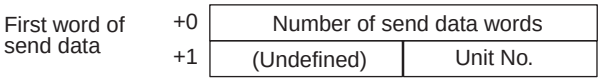

Offset	Contents (data format)	Data
+0	Number of send data words (4 digits BCD)	0002 (fixed)
+1	Unit No. (2 digits Hex)	00 to 0F

Receive Data Word Allocation (3rd Operand of PMCR)

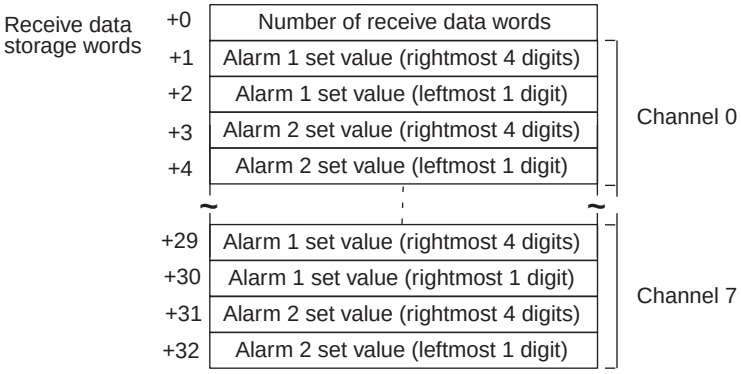

Offset	Contents (data format)	Data
+0	Number of receive data words (4 digits BCD)	0033
+1	Channel 0 Alarm 1 set value (rightmost 4 digits) (4 digits BCD)	0000 to 9999 F indicates a negative number.
+2	Channel 0 Alarm 1 set value (leftmost 1 digit) (4 digits BCD)	0000 to 0009 F indicates a negative number.
+3	Channel 0 Alarm 2 set value (rightmost 4 digits) (4 digits BCD)	0000 to 9999 F indicates a negative number.
+4	Channel 0 Alarm 2 set value (leftmost 1 digit) (4 digits BCD)	0000 to 0009 F indicates a negative number.
	• • •	
+29	Channel 7 Alarm 1 set value (rightmost 4 digits) (4 digits BCD)	0000 to 9999 F indicates a negative number.
+30	Channel 7 Alarm 1 set value (leftmost 1 digit) (4 digits BCD)	0000 to 0009 F indicates a negative number.
+31	Channel 7 Alarm 2 set value (rightmost 4 digits) (4 digits BCD)	0000 to 9999 F indicates a negative number.
+32	Channel 07 Alarm 2 set value (leftmost 1 digit) (4 digits BCD)	0000 to 0009 F indicates a negative number.

Read Hysteresis (Sequence No. 109)

Reads the hysteresis and stores the results in the specified words.

Send Data Word Allocation (2nd Operand of PMCR)

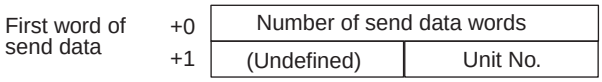

Offset	Contents (data format)	Data
+0	Number of send data words (4 digits BCD)	0002 (fixed)
+1	Unit No. (2 digits Hex)	00 to 0F

Receive Data Word Allocation (3rd Operand of PMCR)

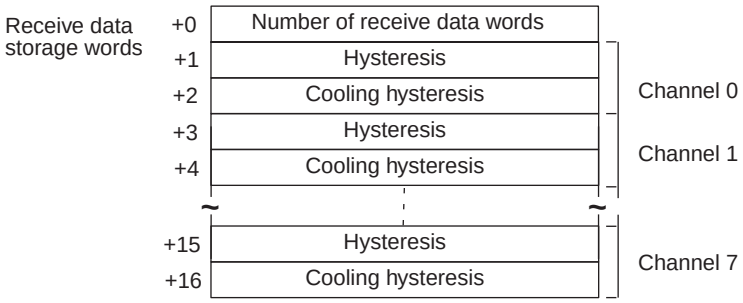

Offset	Contents (data format)	Data
+0	Number of receive data words (4 digits BCD)	0017
+1	Channel 0 Hysteresis (4 digits BCD)	0000 to 0999
+2	Channel 0 Cooling hysteresis (4 digits BCD)	0000 to 0999
	• • •	
+15	Channel 7 Hysteresis (4 digits BCD)	0000 to 0999
+16	Channel 7 Cooling hysteresis (4 digits BCD)	0000 to 0999

Read Operation Status (Sequence No. 110)

Reads the operation status of the E5ZE and stores the results in the specified words.

Send Data Word Allocation (2nd Operand of PMCR)

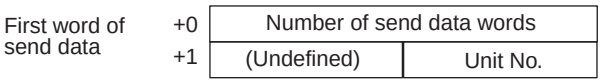

Offset	Contents (data format)	Data
+0	Number of send data words (4 digits BCD)	0002 (fixed)
+1	Unit No. (2 digits Hex)	00 to 0F

Receive Data Word Allocation (3rd Operand of PMCR)

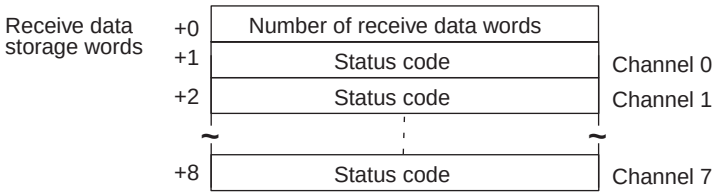

Offset	Contents (data format)	Data
+0	Number of receive data words (4 digits BCD)	0009
+1	Channel 0 Status code (4 digits Hex)	0000 to FFFF
+2	Channel 1 Status code (4 digits Hex)	0000 to FFFF
	• • •	
+8	Channel 7 Status code (4 digits Hex)	0000 to FFFF

Read Error Status (Sequence No. 111)

Reads the contents of errors if they have occurred and stores the results in the specified words.

Send Data Word Allocation (2nd Operand of PMCR)

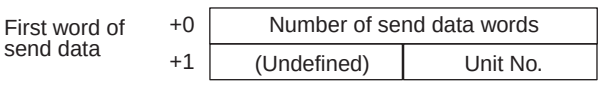

Offset	Contents (data format)	Data
+0	Number of send data words (4 digits BCD)	0002 (fixed)
+1	Unit No. (2 digits Hex)	00 to 0F

Receive Data Word Allocation (3rd Operand of PMCR)

Receive data storage words	+0	Number of receive data words
	+1	Status code

Offset	Contents (data format)	Data
+0	Number of receive data words (4 digits BCD)	0009
+1	Status code (4 digits BCD)	0000 to FFFF

Read Setting Unit (Sequence No. 112)

Reads the setting units and stores the results in the specified words.

Send Data Word Allocation (2nd Operand of PMCR)

First word of send data	+0	Number of send data words	
	+1	(Undefined)	Unit No.

Offset	Contents (data format)	Data
+0	Number of send data words (4 digits BCD)	0002 (fixed)
+1	Unit No. (2 digits Hex)	00 to 0F

Receive Data Word Allocation (3rd Operand of PMCR)

Receive data storage words	+0	Number of receive data words
	+1	Set code

Offset	Contents (data format)	Data
+0	Number of receive data words (4 digits BCD)	0002
+1	Set code (4 digits BCD)	0000: unit of 1 0001: unit of 0.1

Read Input Shift Value (Sequence No. 113)

Reads the input shift values and stores the results in the specified words.

Send Data Word Allocation (2nd Operand of PMCR)

First word of send data	+0	Number of send data words	
	+1	(Undefined)	Unit No.

Offset	Contents (data format)	Data
+0	Number of send data words (4 digits BCD)	0002 (fixed)
+1	Unit No. (2 digits Hex)	00 to 0F

Receive Data Word Allocation (3rd Operand of PMCR)

Receive data storage words	+0	Number of receive data words	
	+1	Input shift value	Channel 0
	+2	Input shift value	Channel 1
	~	~	~
	+8	Input shift value	Channel 7

Offset	Contents (data format)	Data
+0	Number of receive data words (4 digits BCD)	0009
+1	Channel 0 Input shift value (4 digits BCD)	0000 to 0999 F indicates a negative number.
+2	Channel 1 Input shift value (4 digits BCD)	0000 to 0999 F indicates a negative number.
	• • •	
+8	Channel 7 Input shift value (4 digits BCD)	0000 to 0999 F indicates a negative number.

Read Manual Reset Value (Sequence No. 114)

Reads the manual reset value and stores the results in the specified words.

Send Data Word Allocation (2nd Operand of PMCR)

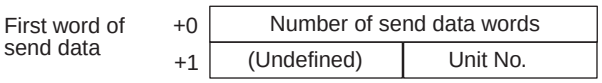

Offset	Contents (data format)	Data
+0	Number of send data words (4 digits BCD)	0002 (fixed)
+1	Unit No. (2 digits Hex)	00 to 0F

Receive Data Word Allocation (3rd Operand of PMCR)

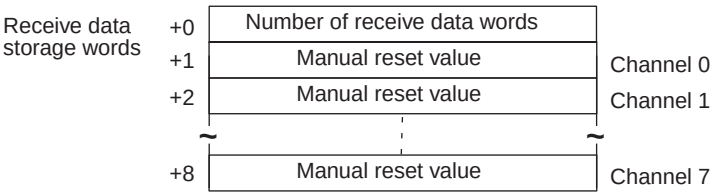

Offset	Contents (data format)	Data
+0	Number of receive data words (4 digits BCD)	0009
+1	Channel 0 Manual reset value (4 digits BCD)	0000 to 1000
+2	Channel 1 Manual reset value (4 digits BCD)	0000 to 1000
	• • •	
+8	Channel 7 Manual reset value (4 digits BCD)	0000 to 1000

Read Ramp Value (Sequence No. 115)

Reads the ramp values and stores the results in the specified words.

Send Data Word Allocation (2nd Operand of PMCR)

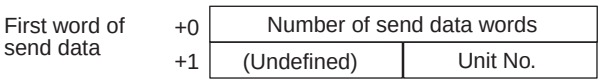

Offset	Contents (data format)	Data
+0	Number of send data words (4 digits BCD)	0002 (fixed)
+1	Unit No. (2 digits Hex)	00 to 0F

Receive Data Word Allocation (3rd Operand of PMCR)

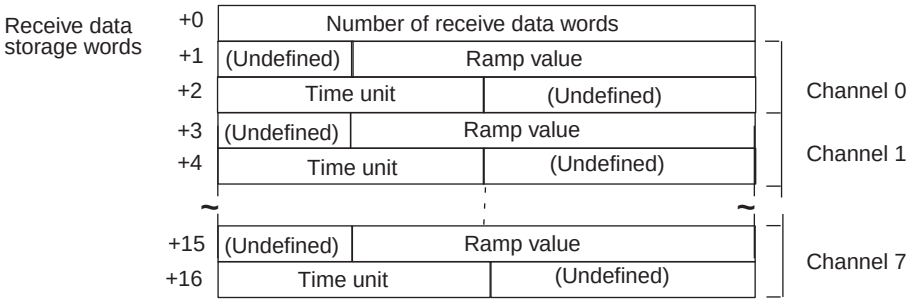

Offset	Contents (data format)	Data
+0	Number of receive data words (4 digits BCD)	0017
+1	Channel 0 Ramp value (3 digits BCD)	000 to 999
+2	Channel 0 Time unit (one ASCII character)	S: Seconds; M: Minutes; H: Hours
	• • •	
+15	Channel 7 Ramp value (3 digits BCD)	000 to 999
+16	Channel 7 Time unit (one ASCII character)	S: Seconds; M: Minutes; H: Hours

Read Present Set Point (Sequence No. 116)

Reads the present set points during ramp operation and stores the results in the specified word.

Send Data Word Allocation (2nd Operand of PMCR)

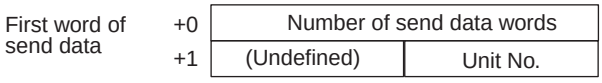

Offset	Contents (data format)	Data
+0	Number of send data words (4 digits BCD)	0002 (fixed)
+1	Unit No. (2 digits Hex)	00 to 0F

Receive Data Word Allocation (3rd Operand of PMCR)

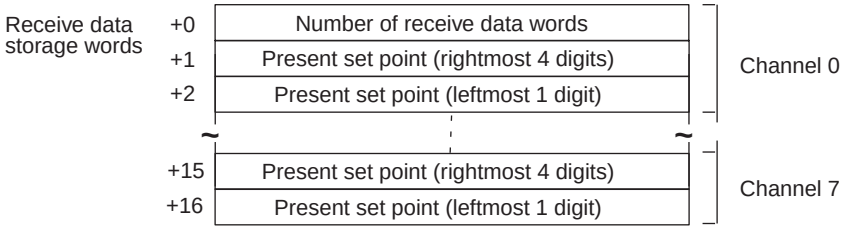

Offset	Contents (data format)	Data
+0	Number of receive data words (4 digits BCD)	0017
+1	Channel 0 Present set point (rightmost 4 digits) (4 digits BCD)	Varies according to the temperature sensor type. Refer to the manual for the E5ZE. F indicates a negative value.
+2	Channel 0 Present set point (leftmost 1 digit) (1 digit BCD)	
	• • •	
+15	Channel 7 Present set point (rightmost 4 digits) (4 digits BCD)	Varies according to the temperature sensor type. Refer to the manual for the E5ZE. F indicates a negative value.
+16	Channel 7 Present set point (leftmost 1 digit) (1 digit BCD)	

Read Output Value Limit (Sequence No. 117)

Reads the output value limits and stores the results in the specified words.

Send Data Word Allocation (2nd Operand of PMCR)

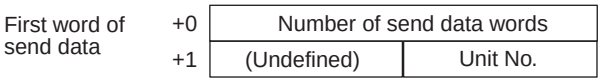

Offset	Contents (data format)	Data
+0	Number of send data words (4 digits BCD)	0002 (fixed)
+1	Unit No. (2 digits Hex)	00 to 0F

Receive Data Word Allocation (3rd Operand of PMCR)

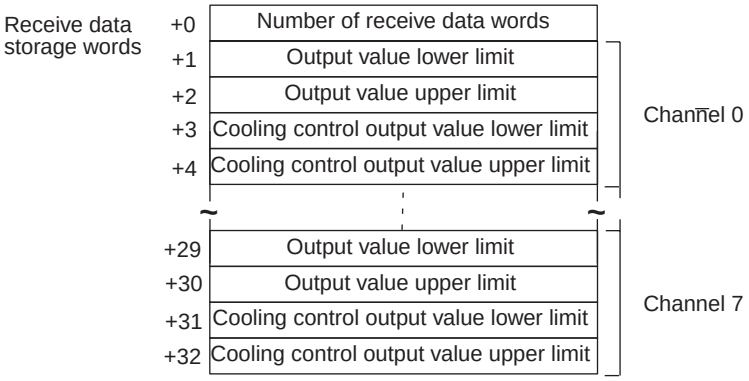

Offset	Contents (data format)	Data
+0	Number of receive data words (4 digits BCD)	0033
+1	Channel 0 Output value lower limit (4 digits BCD)	0000 to 1000
+2	Channel 0 Output value upper limit (4 digits BCD)	0000 to 1000
+3	Channel 0 Cooling control output value upper limit (4 digits BCD)	0000 to 1000
+4	Channel 0 Cooling control output value upper limit (4 digits BCD)	0000 to 1000
	• • •	
+31	Channel 7 Cooling control output value upper limit (4 digits BCD)	0000 to 1000
+32	Channel 7 Cooling control output value upper limit (4 digits BCD)	0000 to 1000

Read Output Value Change Rate Limit (Sequence No. 118)

Reads the output value change rate limits and stores the results in the specified words.

Send Data Word Allocation (2nd Operand of PMCR)

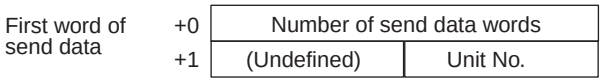

Offset	Contents (data format)	Data
+0	Number of send data words (4 digits BCD)	0002 (fixed)
+1	Unit No. (2 digits Hex)	00 to 0F

Receive Data Word Allocation (3rd Operand of PMCR)

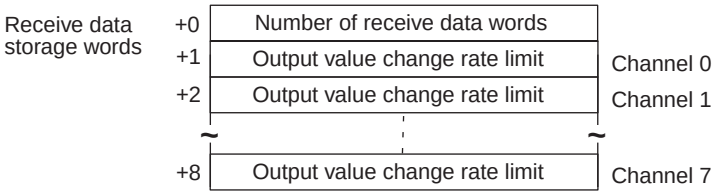

Offset	Contents (data format)	Data
+0	Number of receive data words (4 digits BCD)	0009
+1	Channel 0 Output value change rate limit (4 digits BCD)	0000 to 1000
+2	Channel 1 Output value change rate limit (4 digits BCD)	0000 to 1000
	• • •	
+8	Channel 7 Output value change rate limit (4 digits BCD)	0000 to 1000

Read HB Alarm and HS Alarm Valid Channels (Sequence No. 119)

Reads the valid or invalid channels for HB alarms and HS alarms and stores the results in the specified words.

Send Data Word Allocation (2nd Operand of PMCR)

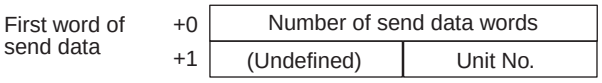

Offset	Contents (data format)	Data
+0	Number of send data words (4 digits BCD)	0002 (fixed)
+1	Unit No. (2 digits Hex)	00 to 0F

Receive Data Word Allocation (3rd Operand of PMCR)

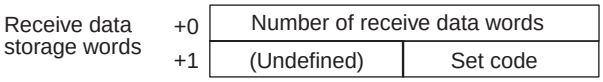

Offset	Contents (data format)	Data
+0	Number of receive data words (4 digits BCD)	0009
+1	Set code (2 digits Hex)	00 to FF

Read Heater Burnout and SSR Failure Detection Currents (Sequence No. 120)

Reads the heater burnout and SSR failure detection currents and stores the results in the specified words.

Send Data Word Allocation (2nd Operand of PMCR)

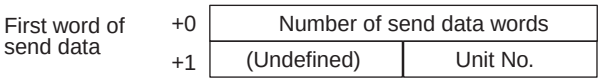

Offset	Contents (data format)	Data
+0	Number of send data words (4 digits BCD)	0002 (fixed)
+1	Unit No. (2 digits Hex)	00 to 0F

Receive Data Word Allocation (3rd Operand of PMCR)

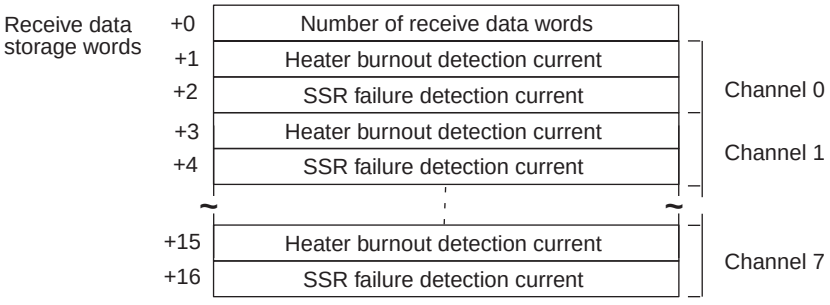

Offset	Contents (data format)	Data
+0	Number of receive data words (4 digits BCD)	0017
+1	Channel 0 Heater burnout detection current (4 digits BCD)	0000 to 0500
+2	Channel 0 SSR failure detection current (4 digits BCD)	0000 to 0500
	• • •	
+15	Channel 7 Heater burnout detection current (4 digits BCD)	0000 to 0500
+16	Channel 7 SSR failure detection current (4 digits BCD)	0000 to 0500

Read Heater Current and SSR Leakage Current (Sequence No.121)

Reads the heater currents and SSR leakage currents and stores the results in the specified words.

Send Data Word Allocation (2nd Operand of PMCR)

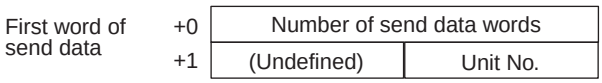

Offset	Contents (data format)	Data
+0	Number of send data words (4 digits BCD)	0002 (fixed)
+1	Unit No. (2 digits Hex)	00 to 0F

Receive Data Word Allocation (3rd Operand of PMCR)

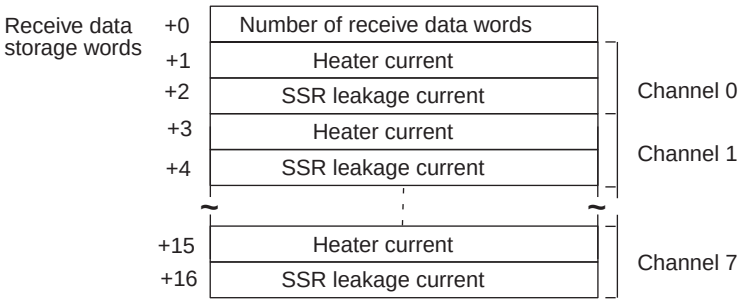

Offset	Contents (data format)	Data
+0	Number of receive data words (4 digits BCD)	0017
+1	Channel 0 Heater current (4 digits BCD)	0000 to 0500
+2	Channel 0 SSR leakage current (4 digits BCD)	0000 to 0500
	• • •	
+15	Channel 7 Heater current (4 digits BCD)	0000 to 0500
+16	Channel 7 SSR leakage current (4 digits BCD)	0000 to 0500

Note The read data will be 0000 for all channels for which HB and HS alarms are not enabled and for all channels for which control is stopped.

Read Dead Band/Overlap Band (Sequence No. 122)

Reads the dead bands/overlap bands and stores the results in the specified words.

Send Data Word Allocation (2nd Operand of PMCR)

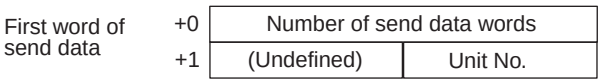

Offset	Contents (data format)	Data
+0	Number of send data words (4 digits BCD)	0002 (fixed)
+1	Unit No. (2 digits Hex)	00 to 0F

Receive Data Word Allocation (3rd Operand of PMCR)

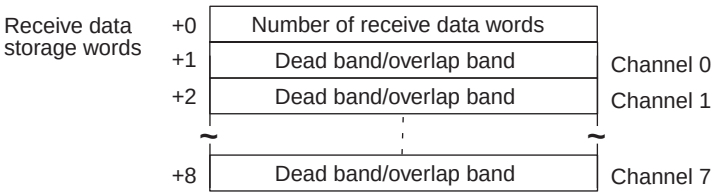

Offset	Contents (data format)	Data
+0	Number of receive data words (4 digits BCD)	0009
+1	Channel 0 Dead band/overlap band (4 digits BCD)	0000 to 0999 F indicates a number.
+2	Channel 1 Dead band/overlap band (4 digits BCD)	0000 to 0999 F indicates a number.
	• • •	
+8	Channel 7 Dead band/overlap band (4 digits BCD)	0000 to 0999 F indicates a number.

Read Cooling Coefficient (Sequence No. 123)

Reads the cooling coefficients and stores the results in the specified words.

Send Data Word Allocation (2nd Operand of PMCR)

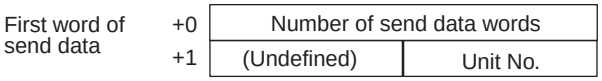

Offset	Contents (data format)	Data
+0	Number of send data words (4 digits BCD)	0002 (fixed)
+1	Unit No. (2 digits Hex)	00 to 0F

Receive Data Word Allocation (3rd Operand of PMCR)

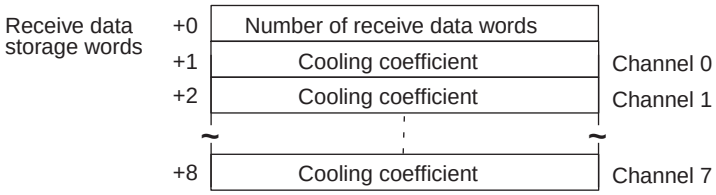

Offset	Contents (data format)	Data
+0	Number of receive data words (4 digits BCD)	0009
+1	Channel 0 Cooling coefficient (4 digits BCD)	0000 to 0100
+2	Channel 1 Cooling coefficient (4 digits BCD)	0000 to 0100
	• • •	
+8	Channel 7 Cooling coefficient (4 digits BCD)	0000 to 0100

Appendix F

E5ZE Temperature Controller Write Protocol

The E5ZE Temperature Controller Write Protocol writes and controls various settings in remote mode for the Temperature Controller connected via a RS-232C or RS-422A/485 cable from the PC via the Serial Communications Board.

Note 1. Negative values cannot be written. All values must be set as unsigned BCD.

2. All sequences in this appendix operate on memory bank 0 and cannot be used for other memory banks.

Structure of the Protocol

The following table shows the structure of the E5ZE Temperature Controller Write Protocol.

Sequence No.	Communications sequence name	Function	Ladder interface	
			Send word allocation	Receive word allocation
150	Write set point (setting unit 1)	Writes the set points using a setting unit of 1.	Yes	No
151	Write set point (setting unit 0.1)	Writes the set points using a setting unit of 0.1.	Yes	No
152	Write proportional band, integral time, and derivative time	Writes the proportional bands, integral times, and derivative times.	Yes	No
153	Write control period	Writes the control periods.	Yes	No
154	Write output mode	Writes the output modes.	Yes	No
155	Write alarm mode	Writes the alarm modes.	Yes	No
156	Write alarm temperature (setting unit 1)	Writes the alarm temperatures using a setting unit of 1.	Yes	No
157	Write alarm temperature (setting unit 0.1)	Writes the alarm temperatures using a setting unit of 0.1.	Yes	No
158	Write hysteresis	Writes the hysteresis.	Yes	No
159	Start autotuning	Starts autotuning.	Yes	No
160	Cancel autotuning	Cancels autotuning.	Yes	No
161	Write setting unit	Writes the setting units.	Yes	No
162	Write input shift value	Writes the input shift values.	Yes	No
163	Write manual reset value	Writes the manual reset values.	Yes	No
164	Write ramp value	Writes the ramp values.	Yes	No
165	Write manual output value	Writes the manual output values.	Yes	No
166	Write output value limit	Writes the output value limits.	Yes	No
167	Write output value change rate limit	Write output value change rate limits.	Yes	No
168	Save settings	Saves settings.	Yes	No
169	Initialize settings	Initializes settings.	Yes	No
170	Write HB alarm and HS alarm valid channels	Writes the HB alarm and HS alarm valid channels.	Yes	No
171	Write heater burnout and SSR failure detection currents	Writes the heater burnout and SSR failure detection currents.	Yes	No
172	Write dead band/overlap band	Writes the dead bands/overlap bands.	Yes	No
173	Write cooling coefficient	Writes the cooling coefficients.	Yes	No
174	Start control	Starts temperature control.	Yes	No
175	Stop operation or control	Stops temperature control or manual operation.	Yes	No
176	Start manual operation	Starts manual operation.	Yes	No

Note **Ladder Interface Settings**

YES: User settings are required for the 2nd or 3rd operands of PMCR.

NO: Send word allocation: Set the constant 0000 for the 2nd operand (S).

Receive word allocation: Set a dummy word (e.g., DM0000) address for the 3rd operand (D).

Connections

The connections are the same as that for the E5ZE Temperature Controller Read Protocol.

Write Set Point (Setting Unit 1) (Sequence No. 150)

Writes the set points using a setting unit of 1 (4 digits).

Send Data Word Allocation (2nd Operand of PMCR)

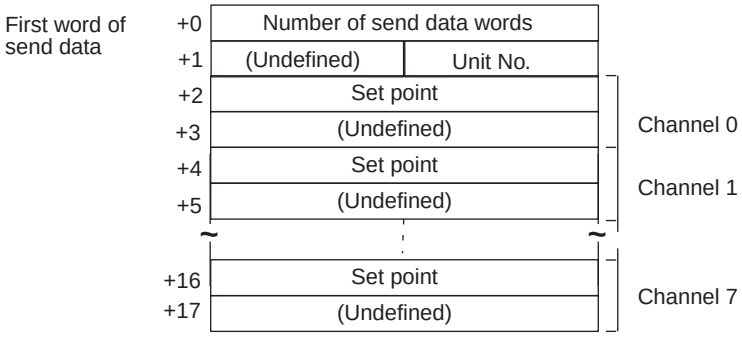

Offset	Contents (data format)	Data
+0	Number of send data words (4 digits BCD)	0018 (fixed)
+1	Unit No. (2 digits Hex)	00 to 0F
+2	Channel 0 Set point (4 digits BCD)	Varies according to the temperature sensor type. Refer to the manual for the E5ZE.
	• • •	
+16	Channel 7 Set point (4 digits BCD)	Varies according to the temperature sensor type. Refer to the manual for the E5ZE.
+17	Not used	---

Receive Data Word Allocation (3rd Operand of PMCR)

None.

Note When the setting unit for the set point is 0.1 (5 digits), use Write Set Point (Setting Unit 0.1), Sequence No.151.

Write Set Point (Setting Unit 0.1) (Sequence No. 151)

Writes the set points using a setting unit of 0.1 (5 digits).

Send Data Word Allocation (2nd Operand of PMCR)

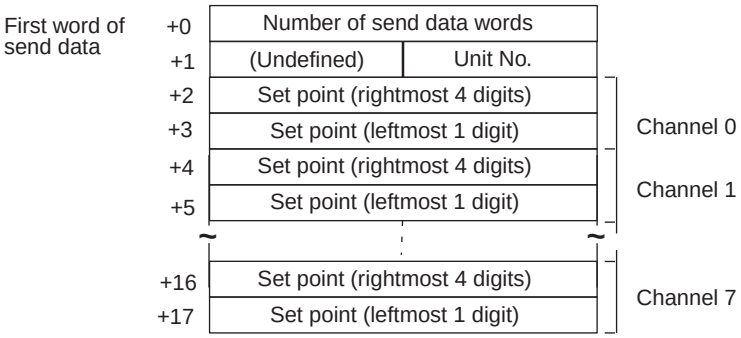

Offset	Contents (data format)	Data
+0	Number of send data words (4 digits BCD)	0018 (fixed)
+1	Unit No. (2 digits Hex)	00 to 0F
+2	Channel 0 Set point (rightmost 4 digits) (4 digits BCD)	Varies according to the temperature sensor type. Refer to the manual for the E5ZE.
+3	Channel 0 Set point (leftmost 1 digit) (1 digit BCD)	
	• • •	
+16	Channel 7 Set point (rightmost 4 digits) (4 digits BCD)	Varies according to the temperature sensor type. Refer to the manual for the E5ZE.
+17	Channel 7 Set point (rightmost 1 digit) (1 digit BCD)	

Receive Data Word Allocation (3rd Operand of PMCR)

None.

Note When the setting unit for the set point is 1 (4 digits), use Write Set Point (Setting Unit 1), Sequence No.150.

Write Proportional Band, Integral Time, and Derivative Time (Sequence No. 152)

Writes the proportional bands (constant P), integral times (constant I), and derivative times (constant D).

Send Data Word Allocation (2nd Operand of PMCR)

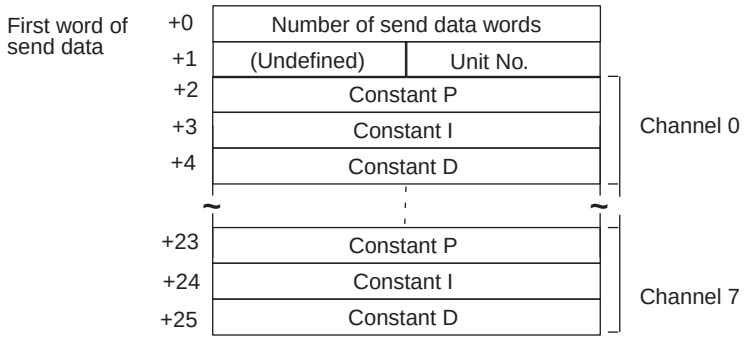

Offset	Contents (data format)	Data
+0	Number of send data words (4 digits BCD)	0026 (fixed)
+1	Unit No. (2 digits Hex)	00 to 0F
+2	Channel 0 Constant P (4 digits BCD)	0000 to 9999
+3	Channel 0 Constant I (4 digits BCD)	0000 to 3999
+4	Channel 0 Constant D (4 digits BCD)	0000 to 3999
	• • •	
+23	Channel 7 Constant P (4 digits BCD)	0000 to 9999
+24	Channel 7 Constant I (4 digits BCD)	0000 to 3999
+25	Channel 7 Constant D (4 digits BCD)	0000 to 3999

Receive Data Word Allocation (3rd Operand of PMCR)

None.

Write Control Period (Sequence No. 153)

Writes the control periods and cooling control periods.

Send Data Word Allocation (2nd Operand of PMCR)

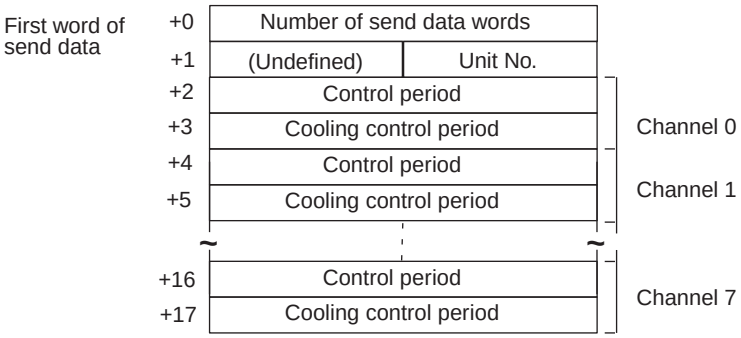

Offset	Contents (data format)	Data
+0	Number of send data words (4 digits BCD)	0018 (fixed)
+1	Unit No. (2 digits Hex)	00 to 0F
+2	Channel 0 Control period (4 digits BCD)	0001 to 0099
+3	Channel 0 Cooling control period (4 digits BCD)	0001 to 0099
+4	Channel 1 Control period (4 digits BCD)	0001 to 0099
+5	Channel 1 Cooling control period (4 digits BCD)	0001 to 0099
	• • •	
+16	Channel 7 Control period (4 digits BCD)	0001 to 0099
+17	Channel 7 Cooling control period (4 digits BCD)	0001 to 0099

Receive Data Word Allocation (3rd Operand of PMCR)

None.

Write Output Mode (Sequence No. 154)

Writes the output mode (normal/reverse).

Send Data Word Allocation (2nd Operand of PMCR)

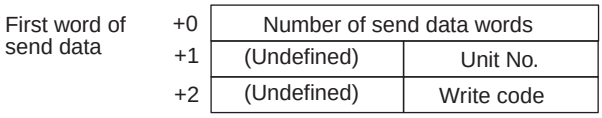

Offset	Contents (data format)	Data
+0	Number of send data words (4 digits BCD)	0003 (fixed)
+1	Unit No. (2 digits Hex)	00 to 0F
+2	Write code (2 digits Hex)	00 to FF

Receive Data Word Allocation (3rd Operand of PMCR)

None.

Write Alarm Mode (Sequence No. 155)

Writes the alarm modes for alarm 1 and alarm 2.

Send Data Word Allocation (2nd Operand of PMCR)

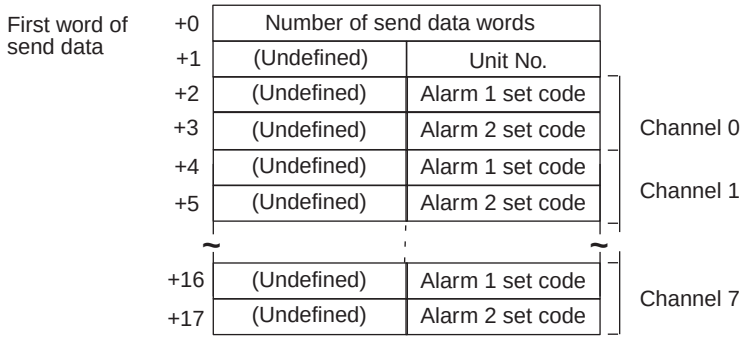

Offset	Contents (data format)	Data
+0	Number of send data words (4 digits BCD)	0018 (fixed)
+1	Unit No. (2 digits Hex)	00 to 0F
+2	Channel 0 Alarm 1 set code (2 digits Hex)	00 to 0C
+3	Channel 0 Alarm 2 set code (2 digits Hex)	00 to 0C
+4	Channel 1 Alarm 1 set code (2 digits Hex)	00 to 0C
+5	Channel 1 Alarm 2 set code (2 digits Hex)	00 to 0C
	• • •	
+16	Channel 7 Alarm 1 set code (2 digits Hex)	00 to 0C
+17	Channel 7 Alarm 2 set code (2 digits Hex)	00 to 0C

Receive Data Word Allocation (3rd Operand of PMCR)

None.

Write Alarm Temperature (Setting Unit 1) (Sequence No. 156)

Writes the alarm temperatures using a setting unit of 1 (4 digits)

Send Data Word Allocation (2nd Operand of PMCR)

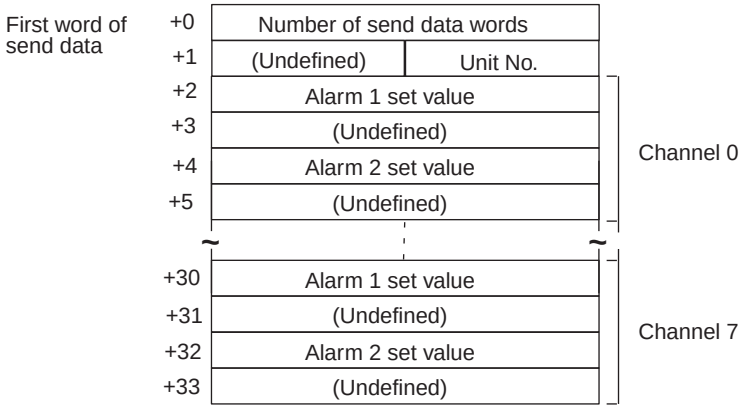

Offset	Contents (data format)	Data
+0	Number of send data words (4 digits BCD)	0034 (fixed)
+1	Unit No. (2 digits Hex)	00 to 0F
+2	Channel 0 Alarm 1 set value (4 digits BCD)	0000 to 9999
+3	Not used	
+4	Channel 0 Alarm 2 set value (4 digits BCD)	0000 to 9999
+5	Not used	
	• • •	
+32	Channel 7 Alarm 2 set value (4 digits BCD)	0000 to 9999
+33	Not used	

Receive Data Word Allocation (3rd Operand of PMCR)

None.

Write Alarm Temperature (Setting Unit 0.1) (Sequence No. 157)

Writes the alarm temperatures using a setting unit of 0.1 (5 digits)

Send Data Word Allocation (2nd Operand of PMCR)

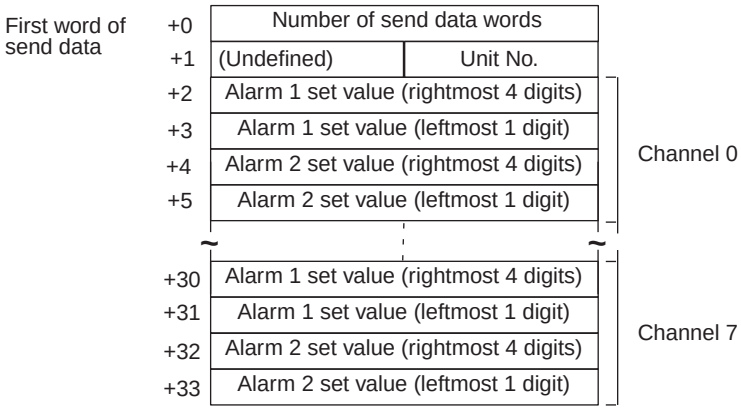

Offset	Contents (data format)	Data
+0	Number of send data words (4 digits BCD)	0034 (fixed)
+1	Unit No. (2 digits Hex)	00 to 0F
+2	Channel 0 Alarm 1 set value (rightmost 4 digits) (4 digits BCD)	0000 to 9999
+3	Channel 0 Alarm 1 set value (leftmost 1 digits) (4 digits BCD)	0000 to 0009
+4	Channel 0 Alarm 2 set value (rightmost 4 digits) (4 digits BCD)	0000 to 9999
+5	Channel 0 Alarm 2 set value (leftmost 1 digits) (4 digits BCD)	0000 to 0009
	• • •	
+32	Channel 7 Alarm 2 set value (rightmost 4 digits) (4 digits BCD)	0000 to 9999
+33	Channel 7 Alarm 2 set value (leftmost 1 digits) (4 digits BCD)	0000 to 0009

Receive Data Word Allocation (3rd Operand of PMCR)

None.

Write Hysteresis (Sequence No. 158)

Writes the hysteresis for control outputs for ON/OFF control.

Send Data Word Allocation (2nd Operand of PMCR)

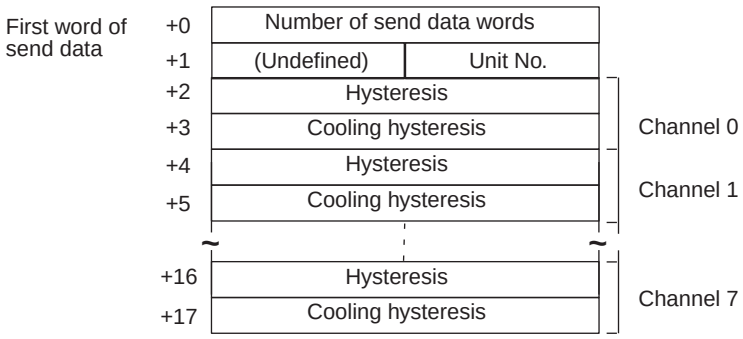

Offset	Contents (data format)	Data
+0	Number of send data words (4 digits BCD)	0018 (fixed)
+1	Unit No. (2 digits Hex)	00 to 0F
+2	Channel 0 Hysteresis (4 digits BCD)	0000 to 0999
+3	Channel 0 Cooling hysteresis (4 digits BCD)	0000 to 0999
+4	Channel 1 Hysteresis (4 digits BCD)	0000 to 0999
+5	Channel 1 Cooling hysteresis (4 digits BCD)	0000 to 0999
	• • •	
+16	Channel 7 Hysteresis (4 digits BCD)	0000 to 0999
+17	Channel 7 Cooling hysteresis (4 digits BCD)	0000 to 0999

Receive Data Word Allocation (3rd Operand of PMCR)

None.

Start Autotuning (Sequence No. 159)

Starts autotuning (AT).

Send Data Word Allocation (2nd Operand of PMCR)

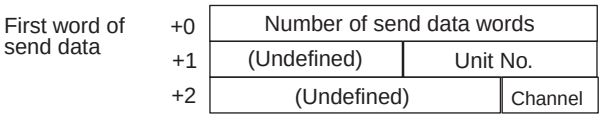

Offset	Contents (data format)	Data
+0	Number of send data words (4 digits BCD)	0003 (fixed)
+1	Unit No. (2 digits Hex)	00 to 0F
+2	Channel (Channel) No. (1 digit BCD)	0 to 7

Receive Data Word Allocation (3rd Operand of PMCR)

None.

Cancel Autotuning (Sequence No. 160)

Cancels Autotuning (AT) for all channels.

Send Data Word Allocation (2nd Operand of PMCR)

First word of send data	+0	Number of send data words	
	+1	(Undefined)	Unit No.

Offset	Contents (data format)	Data
+0	Number of send data words (4 digits BCD)	0002 (fixed)
+1	Unit No. (2 digits Hex)	00 to 0F

Receive Data Word Allocation (3rd Operand of PMCR)

None.

Write Setting Unit (Sequence No. 161)

Writes the setting unit.

Send Data Word Allocation (2nd Operand of PMCR)

First word of send data	+0	Number of send data words	
	+1	(Undefined)	Unit No.
	+2	Write code	

Offset	Contents (data format)	Data
+0	Number of send data words (4 digits BCD)	0003 (fixed)
+1	Unit No. (2 digits Hex)	00 to 0F
+2	Write code (4 digits BCD)	0000: unit of 1 0001: unit of 0.1

Receive Data Word Allocation (3rd Operand of PMCR)

None.

Write Input Shift Value (Sequence No. 162)

Writes the input shift values.

Send Data Word Allocation (2nd Operand of PMCR)

First word of send data	+0	Number of send data words	
	+1	(Undefined)	Unit No.
	+2	Input shift value	Channel 0
	+3	Input shift value	Channel 1
	+4	Input shift value	Channel 2
	+5	Input shift value	Channel 3
	+6	Input shift value	Channel 4
	+7	Input shift value	Channel 5
	+8	Input shift value	Channel 6
	+9	Input shift value	Channel 7

Offset	Contents (data format)	Data
+0	Number of send data words (4 digits BCD)	0010 (fixed)
+1	Unit No. (2 digits Hex)	00 to 0F
+2	Channel 0 Input shift value (4 digits BCD)	0000 to 0999
+3	Channel 1 Input shift value (4 digits BCD)	0000 to 0999
+4	Channel 2 Input shift value (4 digits BCD)	0000 to 0999
	• • •	
+8	Channel 6 Input shift value (4 digits BCD)	0000 to 0999
+9	Channel 7 Input shift value (4 digits BCD)	0000 to 0999

Receive Data Word Allocation (3rd Operand of PMCR)

None.

Write Manual Reset Value (Sequence No. 163)

Writes the manual reset values.

Send Data Word Allocation (2nd Operand of PMCR)

First word of send data			
+0	Number of send data words		
+1	(Undefined)	Unit No.	
+2	Manual reset value		Channel 0
+3	Manual reset value		Channel 1
+4	Manual reset value		Channel 2
+5	Manual reset value		Channel 3
+6	Manual reset value		Channel 4
+7	Manual reset value		Channel 5
+8	Manual reset value		Channel 6
+9	Manual reset value		Channel 7

Offset	Contents (data format)	Data
+0	Number of send data words (4 digits BCD)	0010 (fixed)
+1	Unit No. (2 digits Hex)	00 to 0F
+2	Channel 0 Manual reset value (4 digits BCD)	0000 to 1000
+3	Channel 1 Manual reset value (4 digits BCD)	0000 to 1000
+4	Channel 2 Manual reset value (4 digits BCD)	0000 to 1000
	• • •	
+8	Channel 6 Manual reset value (4 digits BCD)	0000 to 1000
+9	Channel 7 Manual reset value (4 digits BCD)	0000 to 1000

Receive Data Word Allocation (3rd Operand of PMCR)

None.

Write Ramp Value (Sequence No. 164)

Writes the ramp values.

Send Data Word Allocation (2nd Operand of PMCR)

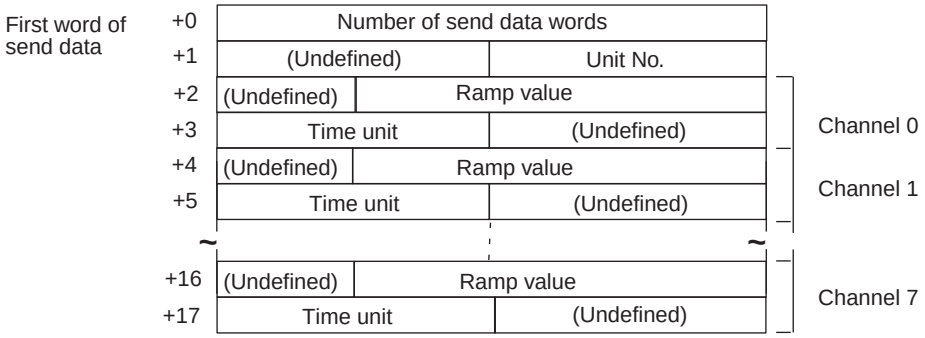

Offset	Contents (data format)	Data
+0	Number of send data words (4 digits BCD)	0018 (fixed)
+1	Unit No. (2 digits Hex)	00 to 0F
+2	Channel 0 Ramp value (3 digits BCD)	000 to 999
+3	Channel 0 Time unit (one ASCII character)	S: Seconds; M: Minutes; H: Hours
+4	Channel 1 Ramp value (3 digits BCD)	000 to 999
+5	Channel 1 Time unit (one ASCII character)	S: Second M: Minute H: Hour
	• • •	
+16	Channel 7 Ramp value (3 digits BCD)	000 to 999
+17	Channel 7 Time unit (one ASCII character)	S: Seconds; M: Minutes; H: Hours

Receive Data Word Allocation (3rd Operand of PMCR)

None.

Write Manual Output Value (Sequence No. 165)

Writes the manual output values for control output in manual operation.

Send Data Word Allocation (2nd Operand of PMCR)

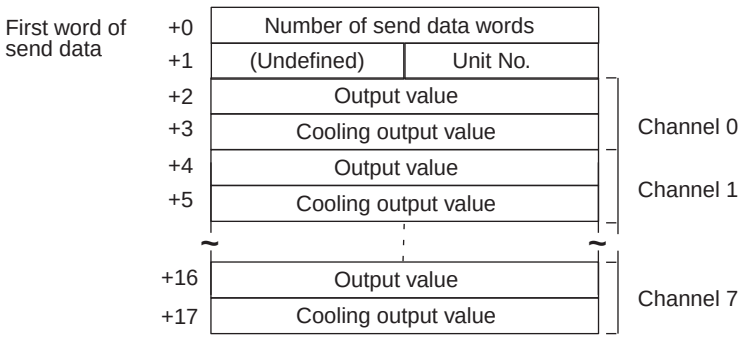

Offset	Contents (data format)	Data
+0	Number of send data words (4 digits BCD)	0018 (fixed)
+1	Unit No. (2 digits Hex)	00 to 0F
+2	Channel 0 Output value (4 digits BCD)	0000 to 1000
+3	Channel 0 Cooling output value (4 digits BCD)	0000 to 1000
+4	Channel 1 Output value (4 digits BCD)	0000 to 1000
+5	Channel 1 Cooling output value (4 digits BCD)	0000 to 1000
	• • •	
+16	Channel 7 Output value (4 digits BCD)	0000 to 1000
+17	Channel 7 Cooling output value (4 digits BCD)	0000 to 1000

Receive Data Word Allocation (3rd Operand of PMCR)

None.

Write Output Value Limit (Sequence No. 166)

Writes the output value limits that restrict the values of the control outputs.

Send Data Word Allocation (2nd Operand of PMCR)

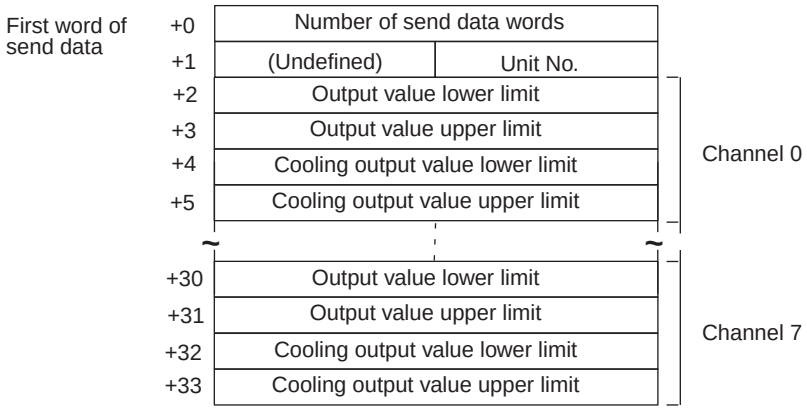

Offset	Contents (data format)	Data
+0	Number of send data words (4 digits BCD)	0034 (fixed)
+1	Unit No. (2 digits Hex)	00 to 0F
+2	Channel 0 Output value lower limit (4 digits BCD)	0000 to 1000
+3	Channel 0 Output value upper limit (4 digits BCD)	0000 to 1000
+4	Channel 0 Cooling output value lower limit (4 digits BCD)	0000 to 1000
+5	Channel 0 Cooling output value upper limit (4 digits BCD)	0000 to 1000
	• • •	
+32	Channel 7 Cooling output value lower limit (4 digits BCD)	0000 to 1000
+33	Channel 7 Cooling output value upper limit (4 digits BCD)	0000 to 1000

Receive Data Word Allocation (3rd Operand of PMCR)

None.

Write Output Value Change Rate Limit (Sequence No. 167)

Writes the output value change rate limits that restrict the rates of change in the control value output.

Send Data Word Allocation (2nd Operand of PMCR)

First word of send data	+0	Number of send data words		
	+1	(Undefined)	Unit No.	
	+2	Output change rate limit		Channel 0
	+3	Output change rate limit		Channel 1
	+4	Output change rate limit		Channel 2
	+5	Output change rate limit		Channel 3
	+6	Output change rate limit		Channel 4
	+7	Output change rate limit		Channel 5
	+8	Output change rate limit		Channel 6
	+9	Output change rate limit		Channel 7

Offset	Contents (data format)	Data
+0	Number of send data words (4 digits BCD)	0010 (fixed)
+1	Unit No. (2 digits Hex)	00 to 0F
+2	Channel 0 Output change rate limit (4 digits BCD)	0000 to 1000
+3	Channel 1 Output change rate limit (4 digits BCD)	0000 to 1000
+4	Channel 2 Output change rate limit (4 digits BCD)	0000 to 1000
	• • •	
+8	Channel 6 Output change rate limit (4 digits BCD)	0000 to 1000
+9	Channel 7 Output change rate limit (4 digits BCD)	0000 to 1000

Receive Data Word Allocation (3rd Operand of PMCR)

None.

Save Settings (Sequence No. 168)

Saves the settings.

Send Data Word Allocation (2nd Operand of PMCR)

First word of send data	+0	Number of send data words	
	+1	(Undefined)	Unit No.

Offset	Contents (data format)	Data
+0	Number of send data words (4 digits BCD)	0002 (fixed)
+1	Unit No. (2 digits Hex)	00 to 0F

Receive Data Word Allocation (3rd Operand of PMCR)

None.

Initialize Settings (Sequence No. 169)

Initializes all the settings to the factory defaults.

Send Data Word Allocation (2nd Operand of PMCR)

First word of send data	+0	Number of send data words	
	+1	(Undefined)	Unit No.

Offset	Contents (data format)	Data
+0	Number of send data words (4 digits BCD)	0002 (fixed)
+1	Unit No. (2 digits Hex)	00 to 0F

Receive Data Word Allocation (3rd Operand of PMCR)

None.

Write HB and HS Alarm Valid Channels (Sequence No. 170)

Writes the valid or invalid channels of HB alarm and HS alarm.

Send Data Word Allocation (2nd Operand of PMCR)

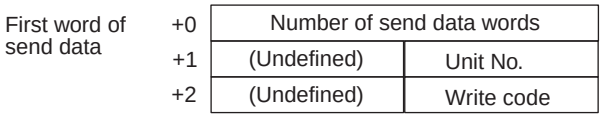

Offset	Contents (data format)	Data
+0	Number of send data words (4 digits BCD)	0003 (fixed)
+1	Unit No. (2 digits Hex)	00 to 0F
+2	Write code (2 digits Hex)	00 to FF

Receive Data Word Allocation (3rd Operand of PMCR)

None.

Write Heater Burnout and SSR Failure Detection Current (Sequence No. 171)

Writes the currents for detecting heater burnouts and SSR failures.

Send Data Word Allocation (2nd Operand of PMCR)

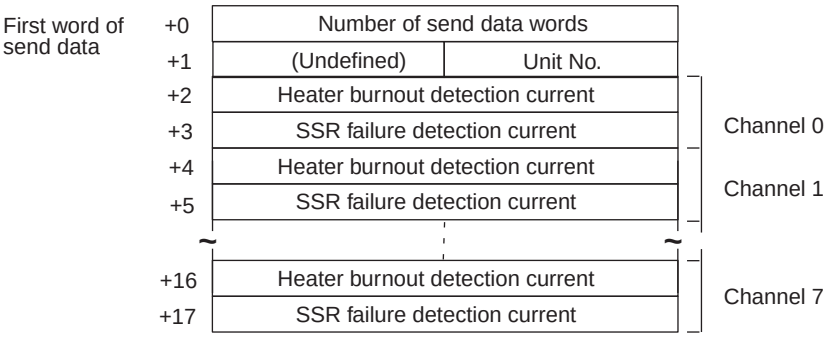

Offset	Contents (data format)	Data
+0	Number of send data words (4 digits BCD)	0018 (fixed)
+1	Unit No. (2 digits Hex)	00 to 0F
+2	Channel 0 Heater burnout detection current (4 digits BCD)	0000 to 0500
+3	Channel 0 SSR failure detection current (4 digits BCD)	0000 to 0500
+4	Channel 1 Heater burnout detection current (4 digits BCD)	0000 to 0500
+5	Channel 1 SSR failure detection current (4 digits BCD)	0000 to 0500
	• • •	
+16	Channel 7 Heater burnout detection current (4 digits BCD)	0000 to 0500
+17	Channel 7 SSR failure detection current (4 digits BCD)	0000 to 0500

Receive Data Word Allocation (3rd Operand of PMCR)

None.

Write Dead Band/Overlap Band (Sequence No. 172)

Writes the dead bands or overlap bands for control outputs during heating/cooling control.

Send Data Word Allocation (2nd Operand of PMCR)

First word of send data	+0	Number of send data words	
	+1	(Undefined) / Unit No.	
	+2	Dead band/overlap band	Channel 0
	+3	Dead band/overlap band	Channel 1
	+4	Dead band/overlap band	Channel 2
	+5	Dead band/overlap band	Channel 3
	+6	Dead band/overlap band	Channel 4
	+7	Dead band/overlap band	Channel 5
	+8	Dead band/overlap band	Channel 6
	+9	Dead band/overlap band	Channel 7

Offset	Contents (data format)	Data
+0	Number of send data words (4 digits BCD)	0010 (fixed)
+1	Unit No. (2 digits Hex)	00 to 0F
+2	Channel 0 Dead band/overlap band (4 digits BCD)	0000 to 0999
+3	Channel 1 Dead band/overlap band (4 digits BCD)	0000 to 0999
+4	Channel 2 Dead band/overlap band (4 digits BCD)	0000 to 0999
	• • •	
+8	Channel 6 Dead band/overlap band (4 digits BCD)	0000 to 0999
+9	Channel 7 Dead band/overlap band (4 digits BCD)	0000 to 0999

Receive Data Word Allocation (3rd Operand of PMCR)

None.

Write Cooling Coefficient (Sequence No. 173)

Writes the cooling coefficients for the cooling proportional bands for heating/cooling control.

Send Data Word Allocation (2nd Operand of PMCR)

First word of send data	+0	Number of send data words	
	+1	(Undefined) / Unit No.	
	+2	Cooling coefficient	Channel 0
	+3	Cooling coefficient	Channel 1
	+4	Cooling coefficient	Channel 2
	+5	Cooling coefficient	Channel 3
	+6	Cooling coefficient	Channel 4
	+7	Cooling coefficient	Channel 5
	+8	Cooling coefficient	Channel 6
	+9	Cooling coefficient	Channel 7

Offset	Contents (data format)	Data
+0	Number of send data words (4 digits BCD)	0010 (fixed)
+1	Unit No. (2 digits Hex)	00 to 0F
+2	Channel 0 Cooling coefficient (4 digits BCD)	0000 to 0100
+3	Channel 1 Cooling coefficient (4 digits BCD)	0000 to 0100
+4	Channel 2 Cooling coefficient (4 digits BCD)	0000 to 0100
	• • •	
+8	Channel 6 Cooling coefficient (4 digits BCD)	0000 to 0100
+9	Channel 7 Cooling coefficient (4 digits BCD)	0000 to 0100

Receive Data Word Allocation (3rd Operand of PMCR)

None.

Start Control (Sequence No. 174)

Starts temperature control for all channels in the specified Unit.

Send Data Word Allocation (2nd Operand of PMCR)

First word of send data			
+0	Number of send data words	
+1	(Undefined)	Unit No.

Offset	Contents (data format)	Data
+0	Number of send data words (4 digits BCD)	0002 (fixed)
+1	Unit No. (2 digits Hex)	00 to 0F

Receive Data Word Allocation (3rd Operand of PMCR)

None.

Stop Operation or Control (Sequence No. 175)

Stops temperature control or manual operation for all channels of the specified Unit.

Send Data Word Allocation (2nd Operand of PMCR)

First word of send data			
+0	Number of send data words	
+1	(Undefined)	Unit No.

Offset	Contents (data format)	Data
+0	Number of send data words (4 digits BCD)	0002 (fixed)
+1	Unit No. (2 digits Hex)	00 to 0F

Receive Data Word Allocation (3rd Operand of PMCR)

None.

Start Manual Operation (Sequence No. 176)

Starts manual operation based on the output values that were set for all channels of the specified Unit.

Send Data Word Allocation (2nd Operand of PMCR)

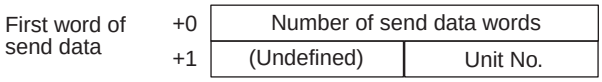

Offset	Contents (data format)	Data
+0	Number of send data words (4 digits BCD)	0002 (fixed)
+1	Unit No. (2 digits Hex)	00 to 0F

Receive Data Word Allocation (3rd Operand of PMCR)

None.

Appendix G

E5□J Temperature Controller Protocol

The E5□J Temperature Controller Protocol performs various settings and controls in remote mode for the Temperature Controller connected to the Serial Communications Board via RS-232C or RS-422A/485 cable.

Note Negative values cannot be written. All values must be set as unsigned BCD.

Structure of the Protocol

The following table shows the structure of the E5□J Temperature Controller Protocol.

Sequence No.	Communications sequence name	Function	Ladder interface	
			Send word allocation	Receive word allocation
200	Select remote mode	Switches the Controller to remote mode.	Yes	No
201	Select local mode	Switches the Controller to local mode.	Yes	No
202	Select backup mode	Switches from set point write mode to backup mode.	Yes	No
203	Select RAM write mode	Switches from set point write mode to RAM write mode.	Yes	No
204	Save set point	Saves the set point.	Yes	No
205	Write parameters 1	Writes the set point, alarm value 1, alarm value 2, and heater burnout alarm value.	Yes	No
206	Write parameters 2	Writes the proportional band, integral time, and derivative time.	Yes	No
207	Write input shift value	Writes the input shift value.	Yes	No
208	Read parameters 1	Reads the set point, alarm value 1, alarm value 2, and heater burnout alarm value.	Yes	Yes
209	Read parameters 2	Reads the proportional band, integral time, and derivative time.	Yes	Yes
210	Read input shift value	Reads the input shift value and writes it in IOM.	Yes	Yes
211	Read output value	Reads the output value and stores it in IOM.	Yes	Yes
212	Read process value	Reads the process value and stores it in IOM.	Yes	Yes
213	Read set point limit	Reads the set point limits and stores them in IOM.	Yes	Yes
214	Read heater current	Reads the heater current and stores it in IOM.	Yes	Yes
215	Read initial status	Reads the initial status and stores it in IOM.	Yes	Yes
216	General-purpose write	Writes the specified parameter by setting a header code.	Yes	No
217	General-purpose read	Reads the specified parameter by setting a header code.	Yes	Yes

Note Ladder Interface Settings

YES: User settings are required for the 2nd or 3rd operands of PMCR.

NO: Send word allocation: Set the constant 0000 for the 2nd operand (S).
Receive word allocation: Set a dummy word (e.g., DM 0000) address for the 3rd operand (D).

Connections

The connections for using the E5□J Temperature Controller Protocol are shown below.

RS-232C Connections

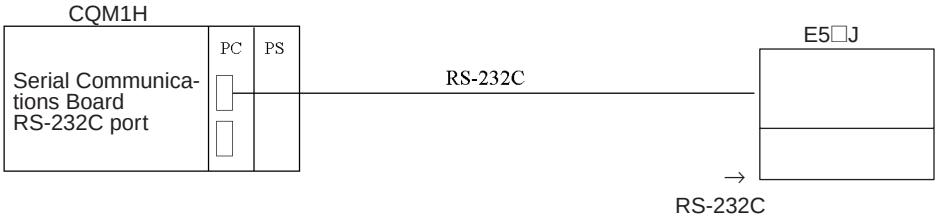

Signal name	Abbreviation	Signal direction	Pin No.
Signal ground or common return line	SG	–	25, 27
Send data	SD	Output	26
Receive data	RD	Input	28

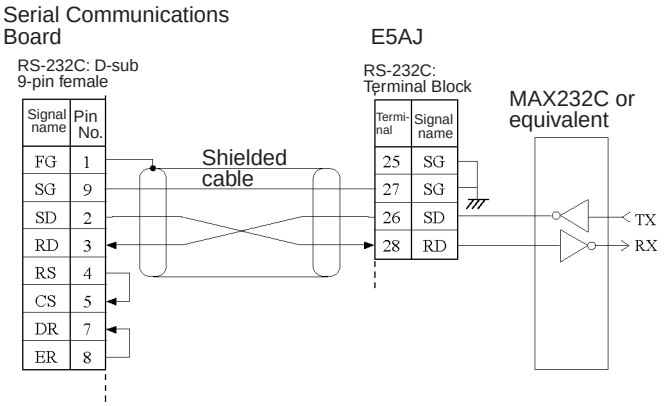

Note 1. The connection configuration is a one-to-one configuration and the maximum cable length is 15 m.
2. Use shielded twisted-pair cable (AWG28i or greater).

RS422A/485 Connections

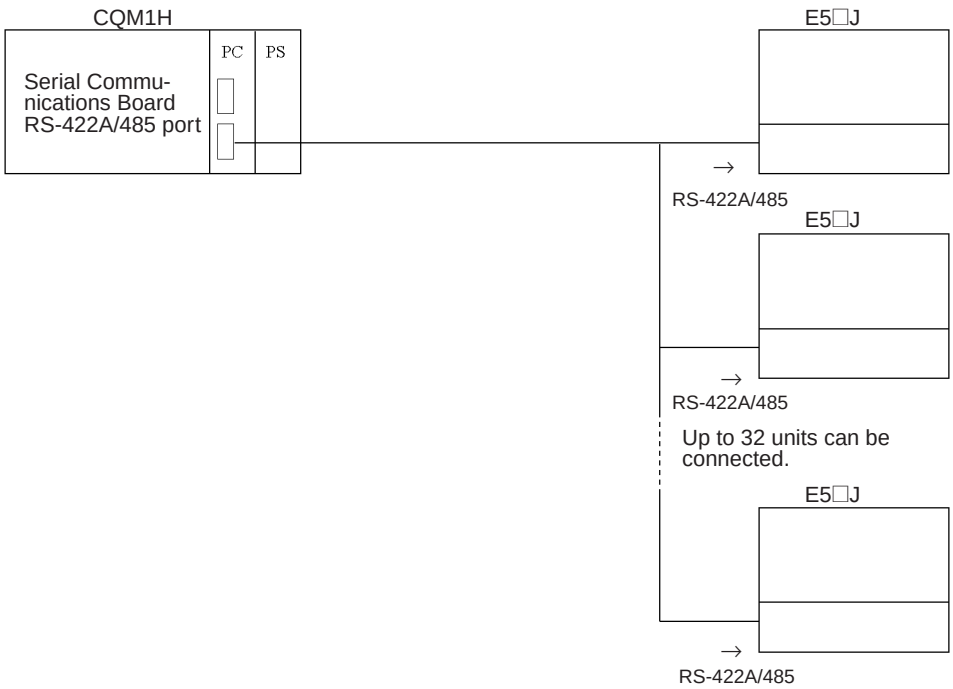

- **RS-422A**

Signal name	Abbreviation	Signal direction	Pin No.
Send data A	SDA	Output	26
Send data B	SDB	Output	25
Receive data A	RDA	Input	28
Receive data B	RDB	Input	29
Signal ground	SG	–	27

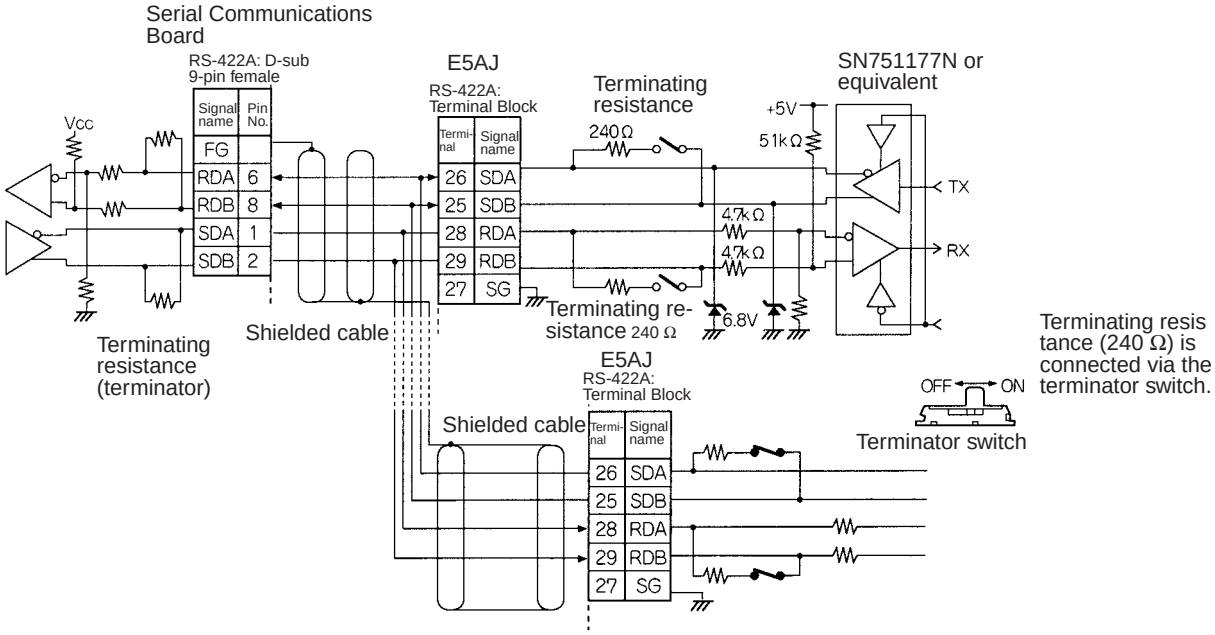

- **RS-485**

Signal name	Abbreviation	Signal direction	Pin No.
Terminal A	A	I/O	26, 28
Terminal B	B	I/O	25, 29
Signal ground	SG	–	27

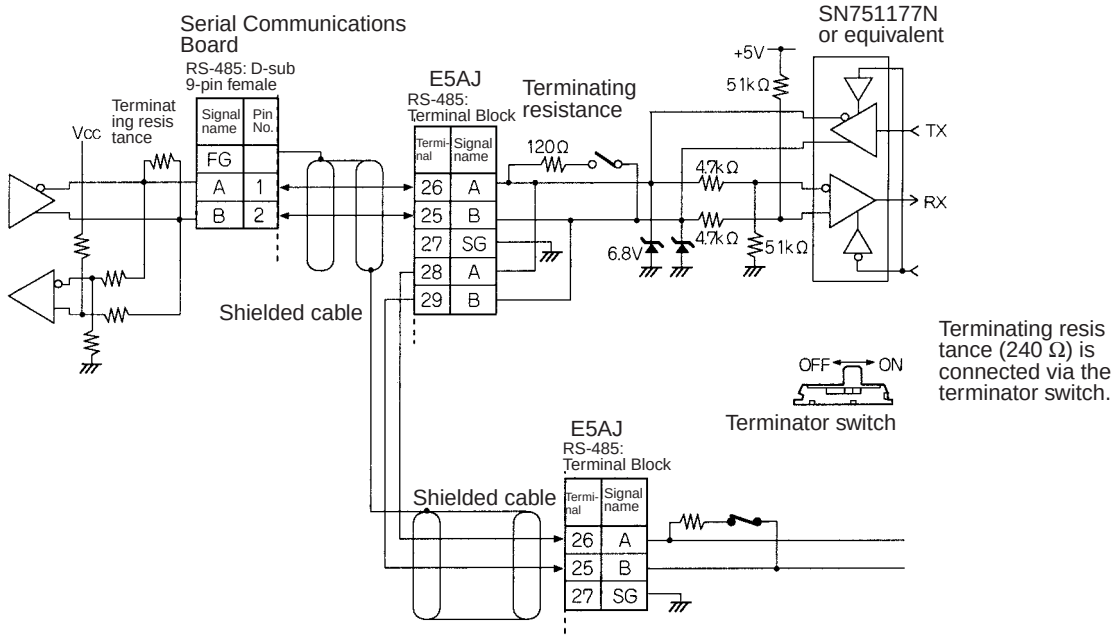

Note 1. The connection configuration is a one-to-one or a one-to-N configuration. Using a one-to-N configuration, up to 32 units can be connected including the Serial Communications Board.
2. The maximum cable length is 500 m. Use shielded twisted-pair cable (AWG28i or greater).
3. Connect terminating resistance to the devices only at both ends of the transmission path.
4. The total terminating resistance at both ends must be at least 100 Ω for RS-422A or 54 Ω for RS-485.

Select Remote Mode (Sequence No. 200)

Switches the Controller to remote mode.

Send Data Word Allocation (2nd Operand of PMCR)

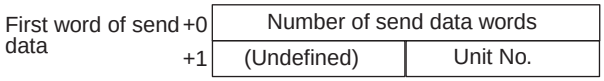

Offset	Contents (data format)	Data
+0	Number of send data words (4 digits BCD)	0002 (fixed)
+1	Unit No. (2 digits BCD)	00 to 31

Receive Data Word Allocation (3rd Operand of PMCR)

None.

Select Local Mode (Sequence No. 201)

Switches the Controller to local mode.

Send Data Word Allocation (2nd Operand of PMCR)

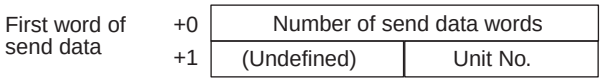

Offset	Contents (data format)	Data
+0	Number of send data words (4 digits BCD)	0002 (fixed)
+1	Unit No. (2 digits BCD)	00 to 31

Receive Data Word Allocation (3rd Operand of PMCR)

None.

Select Backup Mode (Sequence No. 202)

Switches from the set point write mode to backup mode.

Send Data Word Allocation (2nd Operand of PMCR)

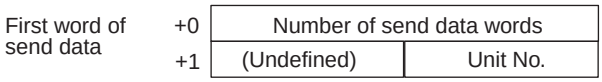

Offset	Contents (data format)	Data
+0	Number of send data words (4 digits BCD)	0002 (fixed)
+1	Unit No. (2 digits BCD)	00 to 31

Receive Data Word Allocation (3rd Operand of PMCR)

None.

Select RAM Write Mode (Sequence No. 203)

Switches from set point write mode to RAM write mode.

Send Data Word Allocation (2nd Operand of PMCR)

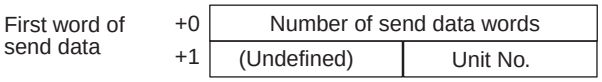

Offset	Contents (data format)	Data
+0	Number of send data words (4 digits BCD)	0002 (fixed)
+1	Unit No. (2 digits BCD)	00 to 31

Receive Data Word Allocation (3rd Operand of PMCR)

None.

Save Set Point (Sequence No. 204)

Saves the set point.

Send Data Word Allocation (2nd Operand of PMCR)

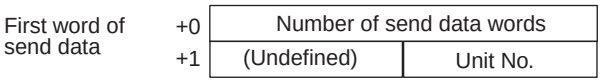

Offset	Contents (data format)	Data
+0	Number of send data words (4 digits BCD)	0002 (fixed)
+1	Unit No. (2 digits BCD)	00 to 31

Receive Data Word Allocation (3rd Operand of PMCR)

None.

Write Parameters 1 (Sequence No. 205)

Writes the set point, alarm value 1, alarm value 2, and a heater burnout alarm value to multiple units.

Send Data Word Allocation (2nd Operand of PMCR)

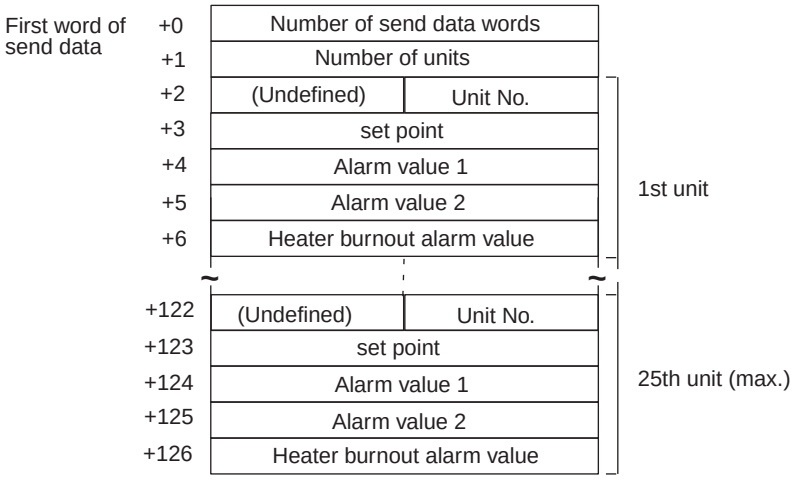

Offset	Contents (data format)	Data
+0	Number of send data words (4 digits BCD)	Number of units × 5 + 2
+1	Number of units (4 digits BCD)	0001 to 0025
+2	1st unit Unit No. (2 digits BCD)	00 to 31
+3	1st unit set point (4 digits BCD)	0000 to 9999
+4	1st unit Alarm value 1 (4 digits BCD)	0000 to 9999
+5	1st unit Alarm value 2 (4 digits BCD)	0000 to 9999
+6	1st unit Heater burnout alarm value 2 (4 digits BCD)	0000 to 9999
+7	2nd unit Unit No. (2 digits BCD)	00 to 31
	• • •	
+126 (max.)	25th unit Heater burnout alarm value 2 (4 digits BCD)	0000 to 9999

Receive Data Word Allocation (3rd Operand of PMCR)

None.

Write Parameters 2 (Sequence No. 206)

Writes the proportional bands, integral times, and derivative times to multiple units.

Send Data Word Allocation (2nd Operand of PMCR)

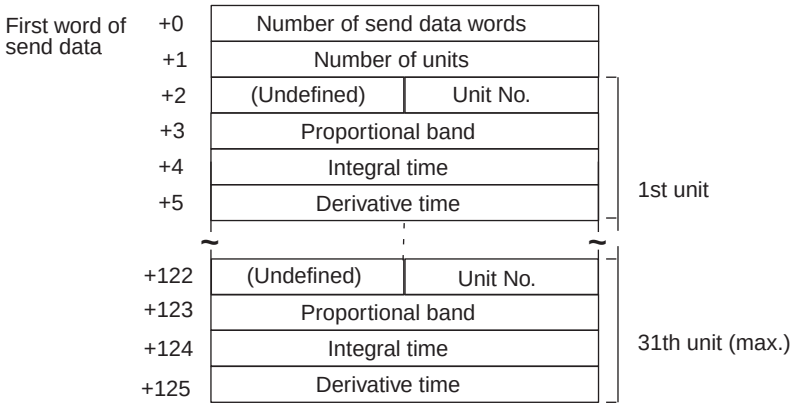

Offset	Contents (data format)	Data
+0	Number of send data words (4 digits BCD)	Number of units × 4 + 2
+1	Number of units (4 digits BCD)	0001 to 0031
+2	1st unit Unit No. (2 digits BCD)	00 to 31
+3	1st unit Proportional band (4 digits BCD)	0000 to 9999
+4	1st unit Integral time (4 digits BCD)	0000 to 9999
+5	1st unit Derivative time (4 digits BCD)	0000 to 9999
+6	2nd unit Unit No. (2 digits BCD)	00 to 31
	• • •	
+125 (max.)	31th unit Derivative time (4 digits BCD)	0000 to 9999

Receive Data Word Allocation (3rd Operand of PMCR)

None.

Write Input Shift Value (Sequence No. 207)

Writes the input shift value.

Send Data Word Allocation (2nd Operand of PMCR)

First word of send data

+0	Number of send data words	
+1	(Undefined)	Unit No.
+2	Input shift value	

Offset	Contents (data format)	Data
+0	Number of send data words (4 digits BCD)	0003 (fixed)
+1	Unit No. (2 digits BCD)	00 to 31
+2	Input shift value (4 digits BCD)	0000 to 9999

Receive Data Word Allocation (3rd Operand of PMCR)

None.

Read Parameters 1 (Sequence No. 208)

Reads the set points, alarm values 1, alarm values 2, and heater burnout alarm values for multiple units and stores the results in the specified words.

Send Data Word Allocation (2nd Operand of PMCR)

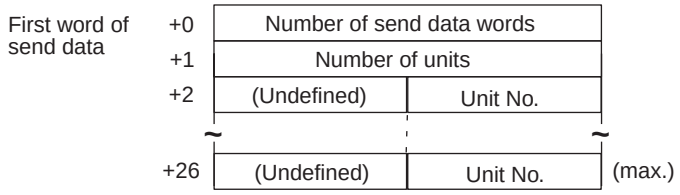

Offset	Contents (data format)	Data
+0	Number of send data words (4 digits BCD)	Number of units + 2
+1	Number of units (4 digits BCD)	0001 to 0025
+2	1st unit Unit No. (2 digits BCD)	00 to 31
+3	2nd unit Unit No. (2 digits BCD)	00 to 31
	• • •	
+26 (max.)	25th unit Unit No. (2 digits BCD)	00 to 31

Receive Data Word Allocation (3rd Operand of PMCR)

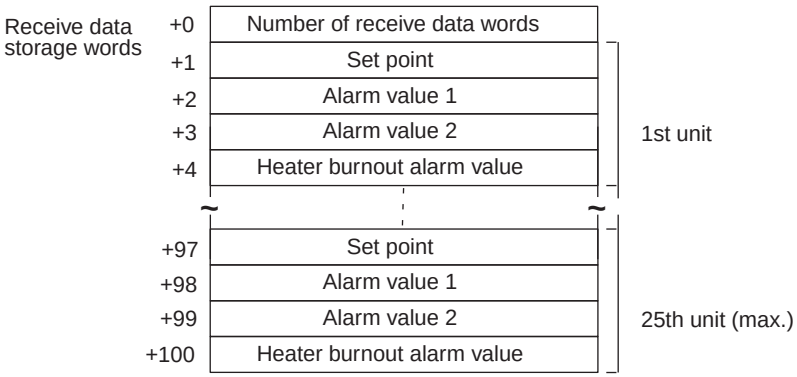

Offset	Contents (data format)	Data
+0	Number of receive data words (4 digits BCD)	Number of units × 4 + 1
+1	1st unit Set point (4 digits BCD)	0000 to 9999 When the left digit is –1, A is set and when it is –, F is set.
+2	1st unit Alarm value 1 (4 digits BCD)	0000 to 9999 When the left digit is –1, A is set and when it is –, F is set.
+3	1st unit Alarm value 2 (4 digits BCD)	0000 to 9999 When the left digit is –1, A is set and when it is –, F is set.
+4	1st unit Heater burnout alarm value (4 digits BCD)	0000 to 9999 When the left digit is –1, A is set and when it is –, F is set.
+5	2nd unit Set point (4 digits BCD)	0000 to 9999 When the left digit is –1, A is set and when it is –, F is set.
	• • •	
+100 (max.)	25th unit Heater burnout alarm value (4 digits BCD)	0000 to 9999 When the left digit is –1, A is set and when it is –, F is set.

Read Parameters 2 (Sequence No. 209)

Reads the proportional bands, integral times, and derivative times for multiple units and stores the results in the specified words.

Send Data Word Allocation (2nd Operand of PMCR)

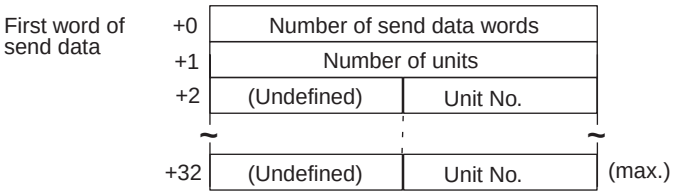

Offset	Contents (data format)	Data
+0	Number of send data words (4 digits BCD)	Number of units+ 2
+1	Number of units (4 digits BCD)	0001 to 0031
+2	1st unit Unit No. (2 digits BCD)	00 to 31
+3	2nd unit Unit No. (2 digits BCD)	00 to 31
	• • •	
+32 (max.)	31th unit Unit No. (2 digits BCD)	00 to 31

Receive Data Word Allocation (3rd Operand of PMCR)

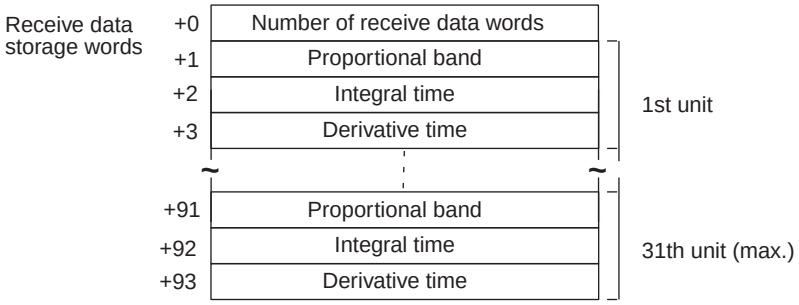

Offset	Contents (data format)	Data
+0	Number of receive data words (4 digits BCD)	Number of units × 3 + 1
+1	1st unit Proportional band (4 digits BCD)	0000 to 9999 When the left digit is –1, A is set and when it is –, F is set.
+2	1st unit Integral time (4 digits BCD)	0000 to 9999 When the left digit is –1, A is set and when it is –, F is set.
+3	1st unit Derivative time (4 digits BCD)	0000 to 9999 When the left digit is –1, A is set and when it is –, F is set.
+4	2nd unit Proportional band (4 digits BCD)	0000 to 9999 When the left digit is –1, A is set and when it is –, F is set.
	• • •	
+93 (max.)	31th unit Derivative time (4 digits BCD)	0000 to 9999 When the left digit is –1, A is set and when it is –, F is set.

Read Input Shift Value (Sequence No. 210)

Reads the input shift value and stores the results in the specified words.

Send Data Word Allocation (2nd Operand of PMCR)

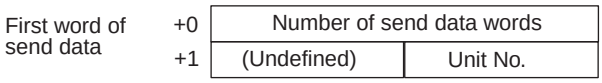

Offset	Contents (data format)	Data
+0	Number of send data words (4 digits BCD)	0002 (fixed)
+1	Unit No. (2 digits BCD)	00 to 31

Receive Data Word Allocation (3rd Operand of PMCR)

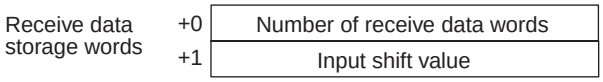

Offset	Contents (data format)	Data
+0	Number of receive data words (4 digits BCD)	0002
+1	Input shift value (4 digits BCD)	0000 to 9999 When the left digit is –1, A is set and when it is –, F is set.

Read Output Value (Sequence No. 211)

Reads the output value and stores the results in the specified word.

Send Data Word Allocation (2nd Operand of PMCR)

First word of send data	+0	Number of send data words	
	+1	(Undefined)	Unit No.

Offset	Contents (data format)	Data
+0	Number of send data words (4 digits BCD)	0002 (fixed)
+1	Unit No. (2 digits BCD)	00 to 31

Receive Data Word Allocation (3rd Operand of PMCR)

Receive data storage words	+0	Number of receive data words
	+1	Output value

Offset	Contents (data format)	Data
+0	Number of receive data words (4 digits BCD)	0002
+1	Output value (4 digits BCD)	0000 to 9999 When the left digit is –1, A is set and when it is –, F is set.

Read Process Value (Sequence No. 212)

Reads the process value and status data and stores the results in the specified word.

Send Data Word Allocation (2nd Operand of PMCR)

First word of send data	+0	Number of send data words	
	+1	(Undefined)	Unit No.

Offset	Contents (data format)	Data
+0	Number of send data words (4 digits BCD)	0002 (fixed)
+1	Unit No. (2 digits BCD)	00 to 31

Receive Data Word Allocation (3rd Operand of PMCR)

Receive data storage words	+0	Number of receive data words
	+1	Process value
	+2	Status data

Offset	Contents (data format)	Data
+0	Number of receive data words (4 digits BCD)	0003
+1	Process value (4 digits BCD)	0000 to 9999 When the left digit is –1, A is set and when it is –, F is set.
+2	Status data (4 digits Hex)	0000 to 9999

Read Set Point Limit (Sequence No. 213)

Reads the set point limits and stores the results in the specified word.

Send Data Word Allocation (2nd Operand of PMCR)

First word of send data	+0	Number of send data words	
	+1	(Undefined)	Unit No.

Offset	Contents (data format)	Data
+0	Number of send data words (4 digits BCD)	0002 (fixed)
+1	Unit No. (2 digits BCD)	00 to 31

Receive Data Word Allocation (3rd Operand of PMCR)

Receive data storage words

+0	Number of receive data words
+1	Set point lower limit
+2	Set point upper limit

Offset	Contents (data format)	Data
+0	Number of receive data words (4 digits BCD)	0003
+1	Set point lower limit (4 digits BCD)	0000 to 9999 When the left digit is –1, A is set and when it is –, F is set.
+2	Set point upper limit (4 digits BCD)	0000 to 9999 When the left digit is –1, A is set and when it is –, F is set.

Read Heater Current (Sequence No. 214)

Reads the heater current and stores the results in the specified word.

Send Data Word Allocation (2nd Operand of PMCR)

First word of send data

+0	Number of send data words	
+1	(Undefined)	Unit No.

Offset	Contents (data format)	Data
+0	Number of send data words (4 digits BCD)	0002 (fixed)
+1	Unit No. (2 digits BCD)	00 to 31

Receive Data Word Allocation (3rd Operand of PMCR)

Receive data storage words

+0	Number of receive data words
+1	Heater current
+2	Status data

Offset	Contents (data format)	Data
+0	Number of receive data words (4 digits BCD)	0003
+1	Heater current (4 digits BCD)	0000 to 9999 When the left digit is –1, A is set and when it is –, F is set.
+2	Status data (4 digits Hex)	0000 to 0011

Read Initial Status (Sequence No. 215)

Reads the initial status and stores the results in the specified word.

Send Data Word Allocation (2nd Operand of PMCR)

First word of send data

+0	Number of send data words	
+1	(Undefined)	Unit No.

Offset	Contents (data format)	Data
+0	Number of send data words (4 digits BCD)	0002 (fixed)
+1	Unit No. (2 digits BCD)	00 to 31

Receive Data Word Allocation (3rd Operand of PMCR)

Receive data storage words

+0	Number of receive data words			
+1	(Undefined)		Status	
+2	(Undefined)	Alarm 1 type	Alarm 2 type	Input type

Offset	Contents (data format)	Data
+0	Number of receive data words (4 digits BCD)	0003
+1	Status (2 digits Hex)	00 to 99
+2	Alarm 1 type (1 digit Hex) Alarm 2 type (1 digit Hex) Input type (1 digit BCD)	0 to 9 0 to 9 0 to 9

General-purpose Write (Sequence No. 216)

Writes the parameter specified by setting a header code.

Send Data Word Allocation (2nd Operand of PMCR)

First word of send data

+0	Number of send data words	
+1	(Undefined)	Unit No.
+2	Header code (ASC)	
+3	(Undefined)	Data code
+4	Send data	

Offset	Contents (data format)	Data
+0	Number of send data words (4 digits BCD)	0005 (fixed)
+1	Unit No. (2 digits BCD)	00 to 31
+2	Header code (two ASCII characters)	Header codes that can be set MB, WS, W%, WW, WB, WN, WV
+3	Data code (2 digits BCD)	01 to 02
+4	Write data (4 digits BCD)	0000 to 9999

Receive Data Word Allocation (3rd Operand of PMCR)

None.

General-purpose Read (Sequence No. 217)

Reads the parameter specified by setting a header.

Send Data Word Allocation (2nd Operand of PMCR)

First word of send data

+0	Number of send data words	
+1	(Undefined)	Unit No.
+2	Header code (ASC)	
+3	(Undefined)	Data code

Offset	Contents (data format)	Data
+0	Number of send data words (4 digits BCD)	0004 (fixed)
+1	Unit No. (2 digits BCD)	00 to 31
+2	Header code (two ASCII characters)	Header codes that can be set RS, R%, RW, RB, RN, RV, RO
+3	Data code (2 digits BCD)	01 to 02

Receive Data Word Allocation (3rd Operand of PMCR)

Receive data storage words

+0	Number of receive data words
+1	Receive data

Offset	Contents (data format)	Data
+0	Number of receive data words (4 digits BCD)	0002
+1	Read data (4 digits BCD)	0000 to 9999 When the left digit is –1, A is set and when it is –, F is set.

Note The completion code is not included in the read data.

Appendix H

ES100□ Digital Controller Protocol

The ES100□ Digital Controller Protocol controls in remote mode and reads various settings from the Controller connected to the Serial Communications Board via RS-232C or RS-422A/485 cable.

Note Negative values cannot be written. All values must be set as unsigned BCD.

Structure of the Protocol

The structure of the ES100□ Digital Controller Protocol is shown below.

Sequence No.	Transmission sequence name	Function	Ladder interface	
			Send word allocation	Receive word allocation
250	Read event data	Reads events 1 to 10 in the variable area.	Yes	Yes
251	Read time signals	Reads time signals 1 to 10 in the variable area.	Yes	Yes
252	Read error detection data	Reads error groups 1 to 15 in the variable area.	Yes	Yes
253	Read heater burnout data	Reads the heater burnout alarm.	Yes	Yes
254	Read PV data	Reads PV data in the variable area.	Yes	Yes
255	Read SP data	Reads SP data in the variable area.	Yes	Yes
256	Read MV	Reads the MV in the variable area.	Yes	Yes
257	Read control monitor data	Reads control monitor data (SP, PV, and MV) in the variable area.	Yes	Yes
258	Read adjustment parameters	Reads adjustment parameters in the parameter area.	Yes	Yes
259	Write adjustment parameters	Writes adjustment parameters in the parameter area.	Yes	No
260	Read PID control parameters 1	Reads PID parameters No. 1 to 4 from the PID control parameters in the parameter area.	Yes	Yes
261	Read PID control parameters 2	Reads PID parameters No. 5 to 8 from the PID control parameters in the parameter area.	Yes	Yes
262	Write PID control parameters 1	Writes PID parameters No. 1 to 4 from PID control parameters in the parameter area.	Yes	No
263	Write PID control parameters 2	Writes PID parameters No. 5 to 8 from PID control parameters in the parameter area.	Yes	No
264	Read local SP	Reads the local SP in the program parameter area.	Yes	Yes
265	Write local SP	Writes local SP in the program parameter area.	Yes	No
266	Read program parameters	Reads local SP, step time, PID No. wait code, and events 1 to 10 set values in the program parameter area.	Yes	Yes
267	Write program parameters	Writes the local SP, step time, PID No., wait code, and event 1 to 10 set values in the program parameter area.	Yes	No
268	Remote setting mode	Switches the setting mode to remote setting.	Yes	No
269	Local setting mode	Switches the setting mode to local setting.	Yes	No
270	External setting mode	Switches the setting mode to external setting.	Yes	No
271	Run command	Starts control.	Yes	No
272	Reset (stop)	Stops control.	Yes	No

Sequence No.	Transmission sequence name	Function	Ladder interface	
			Send word allocation	Receive word allocation
273	Auto mode	Switches the control mode to auto.	Yes	No
274	Manual mode	Switches the control mode to a manual.	Yes	No
275	Execute A.T.	Executes A.T.	Yes	No
276	Cancel A.T.	Cancels A.T.	Yes	No
277	Change pattern No.	Changes the pattern No.	Yes	No
278	Change bank No.	Changes the bank No.	Yes	No
279	Read controller status	Reads the controller status.	Yes	Yes
280	General-purpose command	Sends specified data and stores the received data in the specified words.	Yes	Yes

Note Ladder Interface Settings

YES: User settings are required for the 2nd and 3rd operands of PMCR.

NO: Send word allocation: Set a dummy word address for the 3rd operand (D).
Receive word allocation: Set the constant 0000 for the 2rd operand (S).

Connections

Connections for using the ES100□ Digital Controller Protocol are shown below.

RS-232C Connections

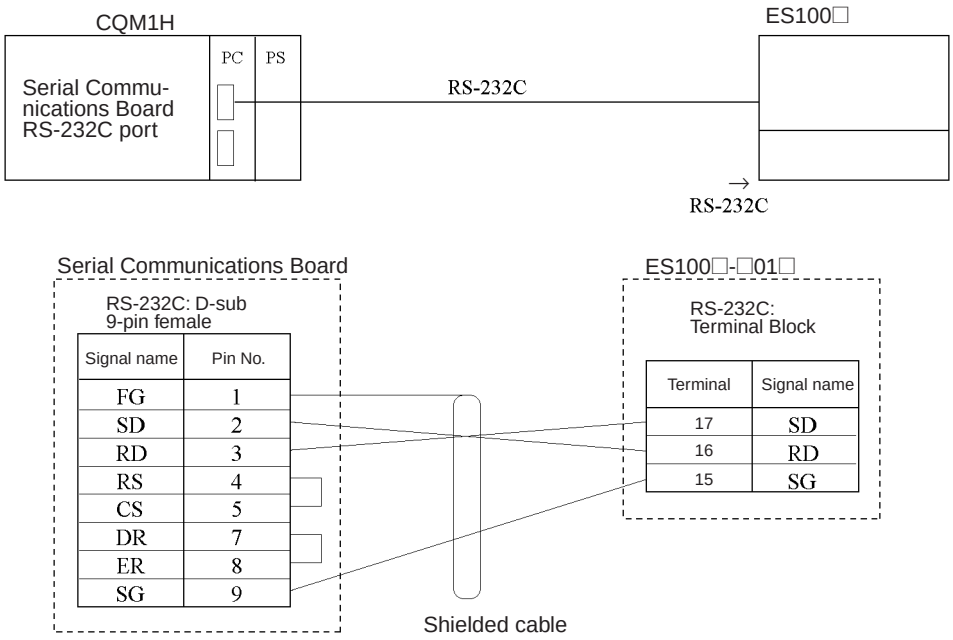

RS422A/485 Connections

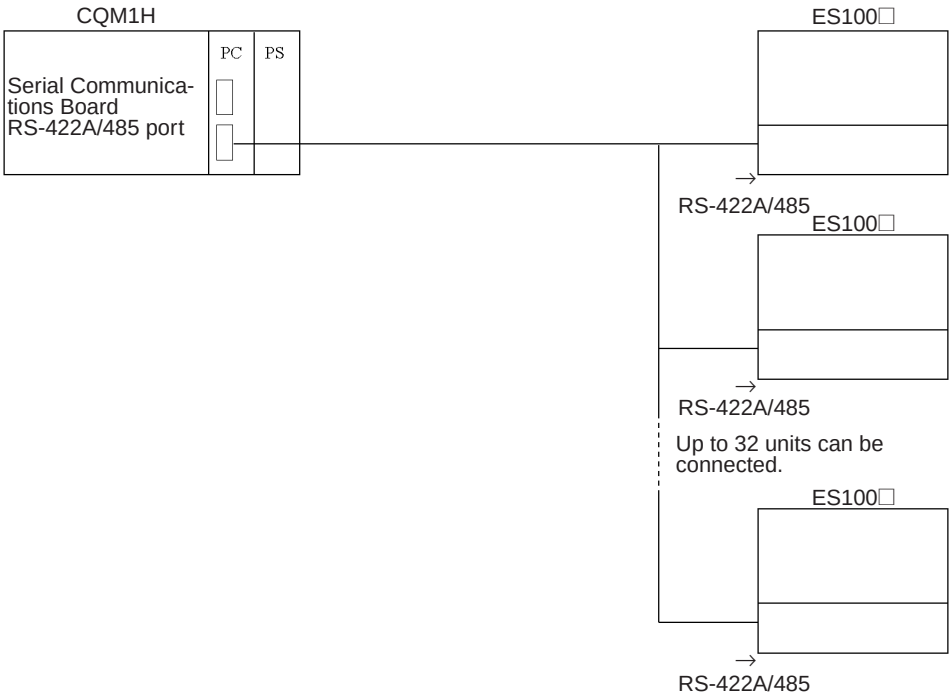

- **RS-422A**

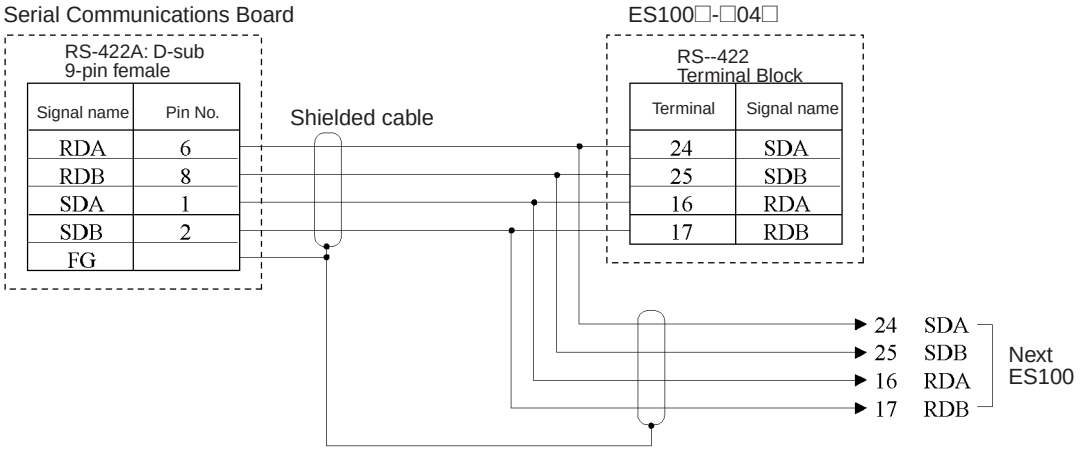

- **RS-485**

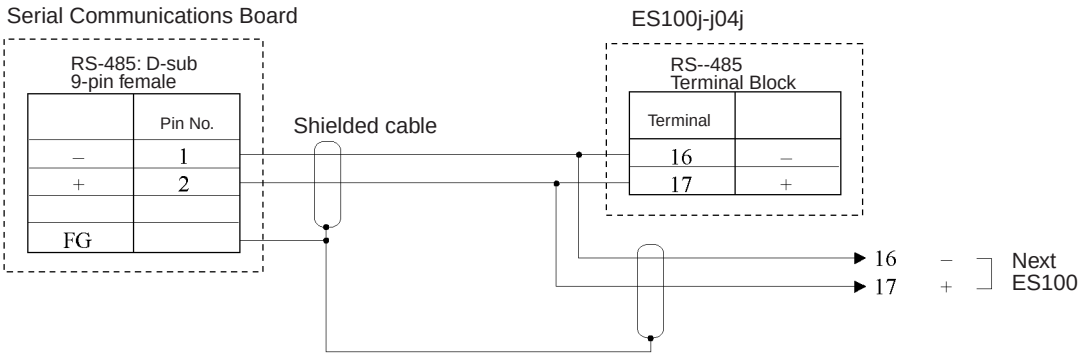

Switch Settings

There are two switches located on the board on the left of the Unit. Set SW1 to the interface: RS-422A or RS-485. Set SW2 to the center on all terminating Units and to the same setting as SW1 on all other Units.

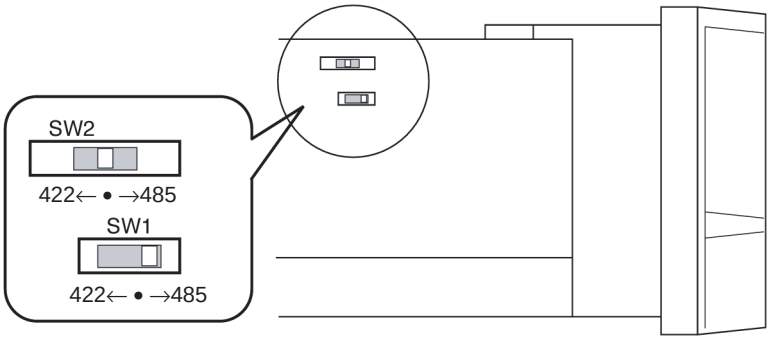

Read Event Data (Sequence No. 250)

Reads events 1 to 10 in the variable area.

Send Data Word Allocation (2nd Operand of PMCR)

First word of send data	+0	Number of send data words		
	+1	Number of units		
	+2	(Undefined)	Unit No.	1st unit
	+3	(Undefined)	Unit No.	2nd unit
	~	~	~	
	+26	(Undefined)	Unit No.	25th unit (max.)

Offset	Contents (data format)	Data
+0	Number of send data words (4 digits BCD)	Number of units + 2
+1	Number of units (4 digits BCD)	0001 to 0025
+2	1st unit Unit No. (2 digits BCD)	00 to 31
+3	2nd unit Unit No. (2 digits BCD)	00 to 31
	• • •	
+26 (max.)	25th unit Unit No. (2 digits BCD)	00 to 31

Receive Data Word Allocation (3rd Operand of PMCR)

Receive data storage words	+0	Number of receive data words		
	+1	Event 1	Event 2	1st unit
	+2	Event 3	Event 4	
	+3	Event 5	Event 6	
	+4	Event 7	Event 8	
	+5	Event 9	Event 10	
	~	~	~	
	+121	Event 1	Event 2	25th unit (max.)
	+122	Event 3	Event 4	
	+123	Event 5	Event 6	
	+124	Event 7	Event 8	
	+125	Event 9	Event 10	

Offset	Contents (data format)	Data
+0	Number of receive data words (4 digits BCD)	Number of units x 5 + 1
+1	1st unit Event data 1 (2 digits Hex) Event data 2 (2 digits Hex)	00 to FF 00 to FF
+2	1st unit Event data 3 (2 digits Hex) Event data 4 (2 digits Hex)	00 to FF 00 to FF
+3	1st unit Event data 5 (2 digits Hex) Event data 6 (2 digits Hex)	00 to FF 00 to FF
+4	1st unit Event data 7 (2 digits Hex) Event data 8 (2 digits Hex)	00 to FF 00 to FF
+5	1st unit Event data 9 (2 digits Hex) Event data 10 (2 digits Hex)	00 to FF 00 to FF
	• • •	
+125 (max.)	25th unit Event data 9 (2 digits Hex) Event data 10 (2 digits Hex)	00 to FF 00 to FF

Read Time Signal (Sequence No. 251)

Reads time signals from 1 to 10 in the variable area.

Send Data Word Allocation (2nd Operand of PMCR)

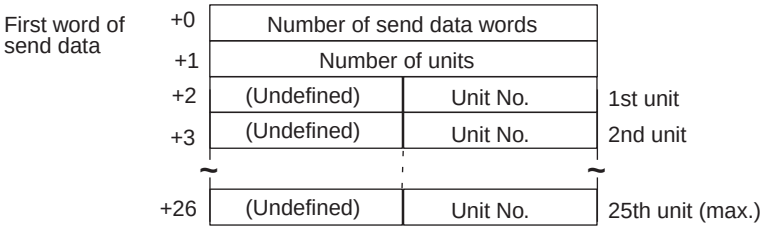

Offset	Contents (data format)	Data
+0	Number of send data words (4 digits BCD)	Number of units + 2
+1	Number of units (4 digits BCD)	0001 to 0025
+2	1st unit Unit No. (2 digits BCD)	00 to 31
+3	2nd unit Unit No. (2 digits BCD)	00 to 31
	• • •	
+26 (max.)	25th unit Unit No. (2 digits BCD)	00 to 31

Receive Data Word Allocation (3rd Operand of PMCR)

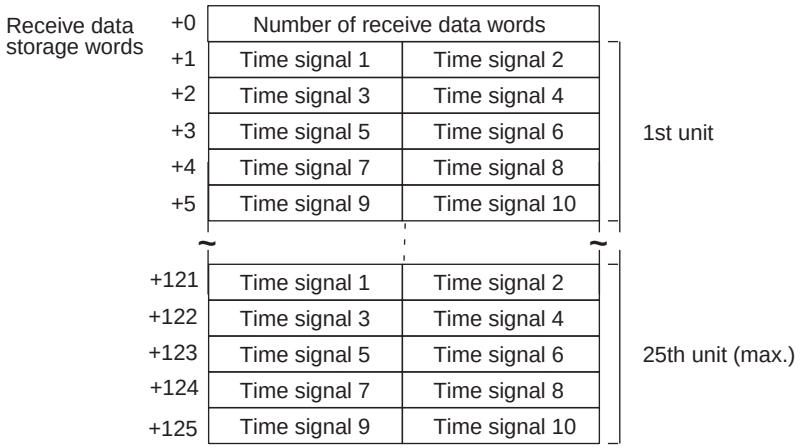

Offset	Contents (data format)	Data
+0	Number of receive data words (4digits BCD)	Number of units × 5 + 1
+1	1st unit Time signal 1 data (2 digits Hex) Time signal 2 data (2 digits Hex)	00 to FF 00 to FF
+2	1st unit Time signal 3 data (2 digits Hex) Time signal 4 data (2 digits Hex)	00 to FF 00 to FF
+3	1st unit Time signal 5 data (2 digits Hex) Time signal 6 data (2 digits Hex)	00 to FF 00 to FF
+4	1st unit Time signal 7 data (2 digits Hex) Time signal 8 data (2 digits Hex)	00 to FF 00 to FF
+5	1st unit Time signal 9 data (2 digits Hex) Time signal 10 data (2 digits Hex)	00 to FF 00 to FF
	• • •	
+125 (max.)	25th unit Time signal 9 data (2 digits Hex) Time signal 10 data (2 digits Hex)	00 to FF 00 to FF

Read Error Detection Data (Sequence No. 252)

Reads error groups from 0 to 15 in the variable area.

Send Data Word Allocation (2nd Operand of PMCR)

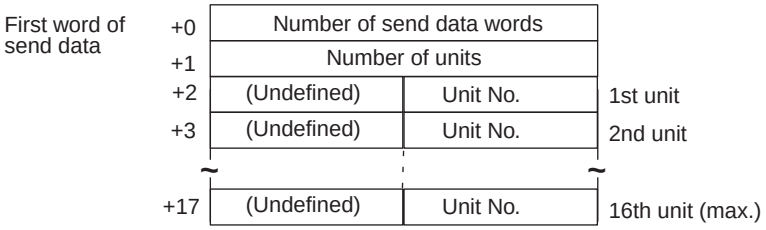

Offset	Contents (data format)	Data
+0	Number of send data words (4 digits BCD)	Number of units + 2
+1	Number of units (4 digits BCD)	0001 to 0008
+2	1st unit Unit No. (2 digits BCD)	00 to 31
+3	2nd unit Unit No. (2 digits BCD)	00 to 31
	• • •	
+17 (max.)	16th unit Unit No. (2 digits BCD)	00 to 31

Receive Data Word Allocation (3rd Operand of PMCR)

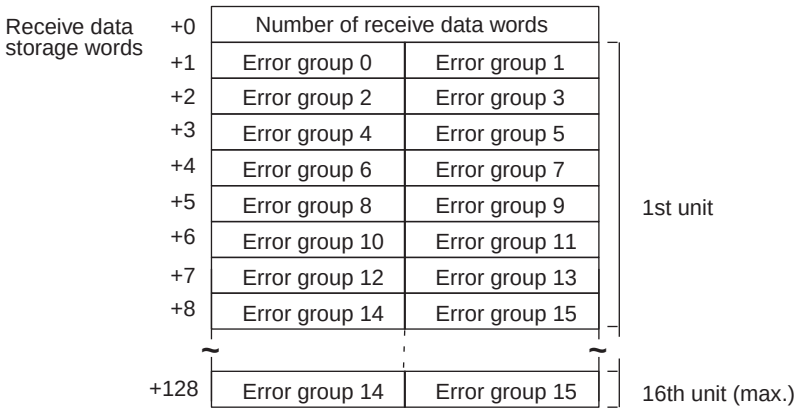

Offset	Contents (data format)	Data
+0	Number of receive data words (4 digits BCD)	Number of units × 8 + 1
+1	1st unit Error group 0 data (2 digits Hex) Error group 1 data (2 digits Hex)	00 to FF 00 to FF
+2	1st unit Error group 2 data (2 digits Hex) Error group 3 data (2 digits Hex)	00 to FF 00 to FF
	• •	
+7	1st unit Error group 12 data (2 digits Hex) Error group 13 data (2 digits Hex)	00 to FF 00 to FF
+8	1st unit Error group 14 data (2 digits Hex) Error group 15 data (2 digits Hex)	00 to FF 00 to FF
+9	2nd unit Error group 0 data (2 digits Hex) Error group 1 data (2 digits Hex)	00 to FF 00 to FF
	• •	
+128 (max.)	16th unit Error group 14 data (2 digits Hex) Error group 15 data (2 digits Hex)	00 to FF 00 to FF

Read Heater Burnout Data (Sequence No. 253)

Reads the heater burnout alarm in the variable area.

Send Data Word Allocation (2nd Operand of PMCR)

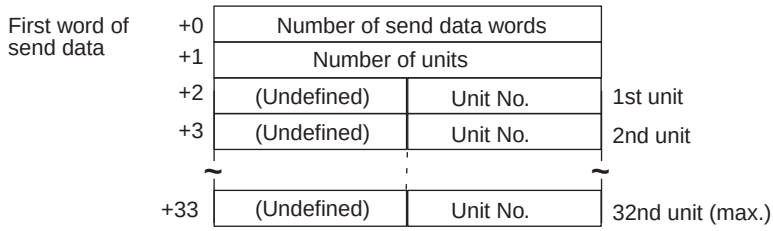

Offset	Contents (data format)	Data
+0	Number of send data words (4 digits BCD)	Number of units + 2
+1	Number of units (4 digits BCD)	0001 to 0032
+2	1st unit Unit No. (2 digits BCD)	00 to 31
+3	2nd unit Unit No. (2 digits BCD)	00 to 31
	• • •	
+33 (max.)	32nd unit Unit No. (2 digits BCD)	00 to 31

Receive Data Word Allocation (3rd Operand of PMCR)

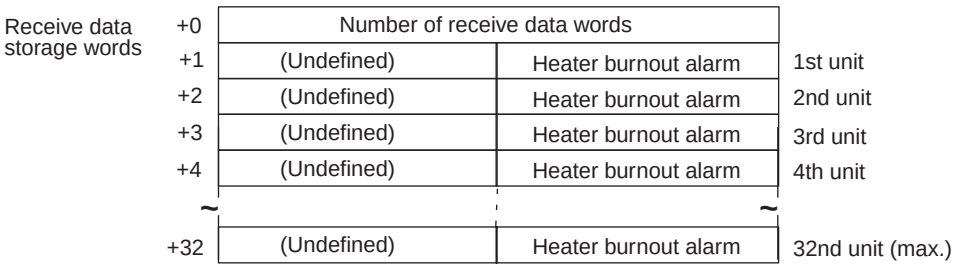

Offset	Contents (data format)	Data
+0	Number of receive data words (4 digits BCD)	Number of units +1
+1	1st unit Heater burnout alarm (2 digits Hex)	00 to FF
+2	2nd unit Heater burnout alarm (2 digits Hex)	00 to FF
+3	3rd unit Heater burnout alarm (2 digits Hex)	00 to FF
+4	4th unit Heater burnout alarm (2 digits Hex)	00 to FF
	• • •	
+32 (max.)	32nd unit Heater burnout alarm (2 digits Hex)	00 to FF

Read PV Data (Sequence No. 254)

Reads the PV data for the variable type “analog data” in the variable area.

Send Data Word Allocation (2nd Operand of PMCR)

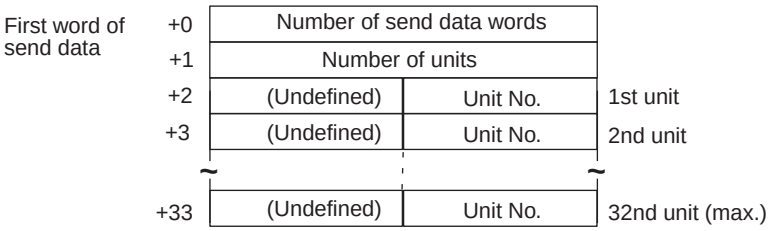

Offset	Contents (data format)	Data
+0	Number of send data words (4 digits BCD)	Number of units + 2
+1	Number of units (4 digits BCD)	0001 to 0032
+2	1st unit Unit No. (2 digits BCD)	00 to 31
+3	2nd unit Unit No. (2 digits BCD)	00 to 31
	• • •	
+33 (max.)	32nd unit Unit No. (2 digits BCD)	00 to 31

Receive Data Word Allocation (3rd Operand of PMCR)

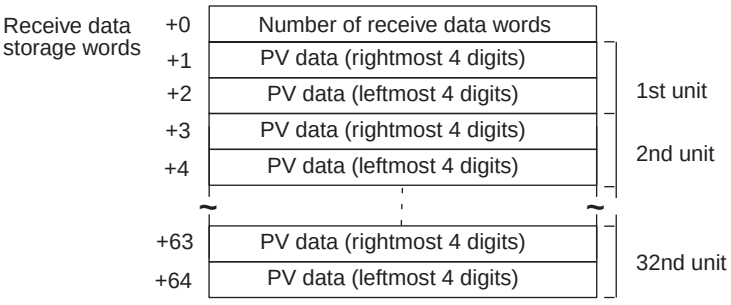

Offset	Contents (data format)	Data
+0	Number of receive data words (4digits BCD)	Number of units × 2 + 1
+1	1st unit PV data (rightmost 4 digits) (4 digits BCD)	00000000 to 09999000 F indicates a negative number.
+2	1st unit PV data (leftmost 4 digits) (4 digits BCD)	
+3	2nd unit PV data (rightmost 4 digits) (4 digits BCD)	00000000 to 09999000 F indicates a negative number.
+4	2nd unit PV data (leftmost 4 digits) (4 digits BCD)	
	• • •	
+63	32nd unit PV data (rightmost 4 digits) (4 digits BCD)	00000000 to 09999000 F indicates a negative number.
+64	32nd unit PV data (leftmost 4 digits) (4 digits BCD)	

Read SP Data (Sequence No. 255)

Reads the SP data for the variable type “analog data” in the variable area.

Send Data Word Allocation (2nd Operand of PMCR)

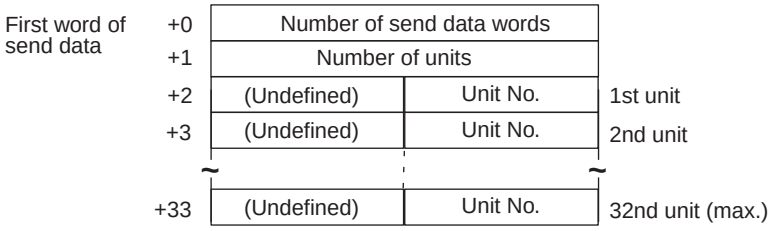

Offset	Contents (data format)	Data
+0	Number of send data words (4 digits BCD)	Number of units + 2
+1	Number of units (4 digits BCD)	0001 to 0032
+2	1st unit Unit No. (2 digits BCD)	00 to 31
+3	2nd unit Unit No. (2 digits BCD)	00 to 31
	• • •	
+33 (max.)	32nd unit Unit No. (2 digits BCD)	00 to 31

Receive Data Word Allocation (3rd Operand of PMCR)

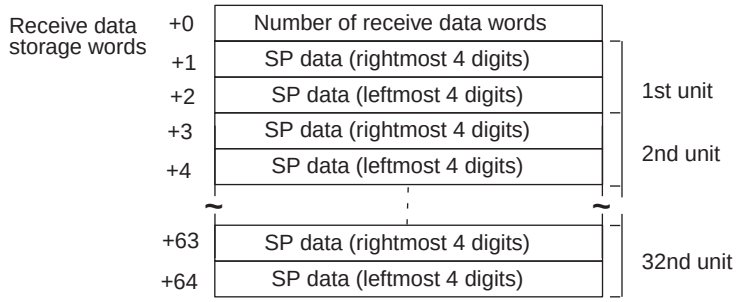

Offset	Contents (data format)	Data
+0	Number of receive data words (4 digits BCD)	Number of units × 2 + 1
+1	1st unit SP data (rightmost 4 digits) (4 digits BCD)	00000000 to 09999000 F indicates a negative number.
+2	1st unit SP data (leftmost 4 digits) (4 digits BCD)	
+3	2nd unit SP data (rightmost 4 digits) (4 digits BCD)	00000000 to 09999000 F indicates a negative number.
+4	2nd unit SP data (leftmost 4 digits) (4 digits BCD)	
	• • •	
+63	32nd unit SP data (rightmost 4 digits) (4 digits BCD)	00000000 to 09999000 F indicates a negative number.
+64	32nd unit SP data (leftmost 4 digits) (4 digits BCD)	

Read MV Data (Sequence No. 256)

Reads the MV for the variable type “analog data” in the variable area.

Send Data Word Allocation (2nd Operand of PMCR)

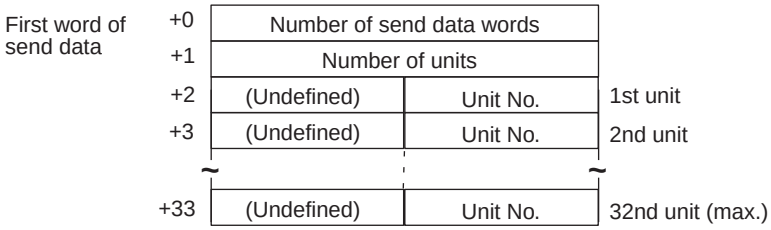

Offset	Contents (data format)	Data
+0	Number of send data words (4 digits BCD)	Number of units + 2
+1	Number of units (4 digits BCD)	0001 to 0032
+2	1st unit Unit No. (2 digits BCD)	00 to 31
+3	2nd unit Unit No. (2 digits BCD)	00 to 31
	• • •	
+33 (max.)	32nd unit Unit No. (2 digits BCD)	00 to 31

Receive Data Word Allocation (3rd Operand of PMCR)

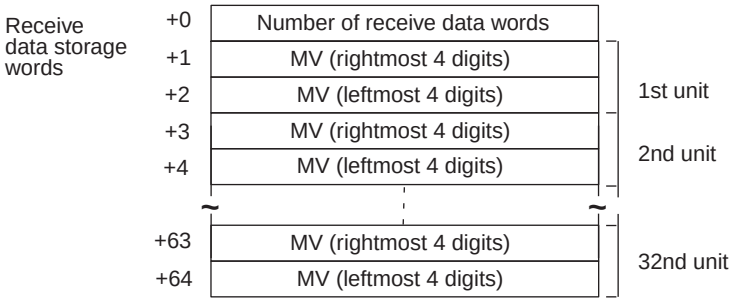

Offset	Contents (data format)	Data
+0	Number of receive data words (4 digits BCD)	Number of units × 2 + 1
+1	1st unit MV (rightmost 4 digits) (4 digits BCD)	00000000 to 09999000 F indicates a negative number.
+2	1st unit MV (leftmost 4 digits) (4 digits BCD)	
+3	2nd unit MV (rightmost 4 digits) (4 digits BCD)	00000000 to 09999000 F indicates a negative number.
+4	2nd unit MV (leftmost 4 digits) (4 digits BCD)	
	• • •	
+63	32nd unit MV (rightmost 4 digits) (4 digits BCD)	00000000 to 09999000 F indicates a negative number.
+64	32nd unit MV (leftmost 4 digits) (4 digits BCD)	

Read Control Monitor Data (Sequence No. 257)

Reads the control monitor data (SP/PV/MV) in the variable area.

Send Data Word Allocation (2nd Operand of PMCR)

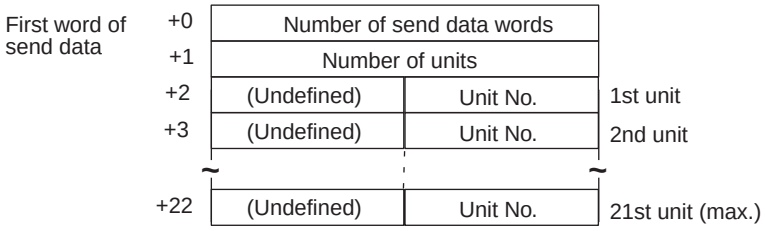

Offset	Contents (data format)	Data
+0	Number of send data words (4 digits BCD)	Number of units + 2
+1	Number of units (4 digits BCD)	0001 to 0021
+2	1st unit Unit No. (2 digits BCD)	00 to 31
+3	2nd unit Unit No. (2 digits BCD)	00 to 31
	• • •	
+22 (max.)	21st unit Unit No. (2 digits BCD)	00 to 31

Receive Data Word Allocation (3rd Operand of PMCR)

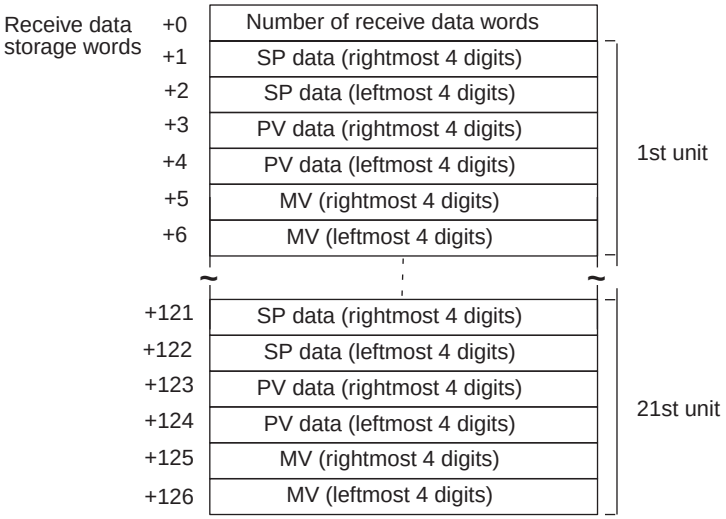

Offset	Contents (data format)	Data
+0	1st unit Number of receive data words (4 digits BCD)	Number of units × 6 + 1
+1	1st unit SP data (rightmost 4 digits) (4 digits BCD)	00000000 to 09999000 F indicates a negative number.
+2	1st unit SP data (leftmost 4 digits) (4 digits BCD)	
+3	1st unit PV data (rightmost 4 digits) (4 digits BCD)	00000000 to 09999000 F indicates a negative number.
+4	1st unit PV data (leftmost 4 digits) (4 digits BCD)	
+5	1st unit MV (rightmost 4 digits) (4 digits BCD)	00000000 to 09999000 F indicates a negative number.
+6	1st unit MV (leftmost 4 digits) (4 digits BCD)	
	• • •	
+125	21st unit MV (rightmost 4 digits) (4 digits BCD)	00000000 to 09999000 F indicates a negative number.
+126	21st unit MV (leftmost 4 digits) (4 digits BCD)	

Read Adjustment Parameters (Sequence No. 258)

Reads the adjustment parameters in the parameter area and stores the results in the specified words.

Send Data Word Allocation (2nd Operand of PMCR)

First word of send data	+0	Number of send data words	
	+1	(Undefined)	Unit No.

Offset	Contents (data format)	Data
+0	Number of send data words (4 digits BCD)	0002 (fixed)
+1	Unit No. (2 digits BCD)	00 to 31

Receive Data Word Allocation (3rd Operand of PMCR)

Receive data storage words		Number of receive data words	
+0			
+1	—	Fixed SP	(rightmost 4 digits)
+2			(leftmost 4 digits)
+3	—	Control output 1 pulse cycle	(rightmost 4 digits)
+4			(leftmost 4 digits)
+5	—	Control output 2 pulse cycle	(rightmost 4 digits)
+6			(leftmost 4 digits)
+7	—	Fuzzy strength	(rightmost 4 digits)
+8			(leftmost 4 digits)
+9	—	Cooling coefficient	(rightmost 4 digits)
+10			(leftmost 4 digits)
+11	—	Heater burnout alarm setting	(rightmost 4 digits)
+12			(leftmost 4 digits)
+13	—	Position-proportional dead band	(rightmost 4 digits)
+14			(leftmost 4 digits)
+15	—	Switching output hysteresis	(rightmost 4 digits)
+16			(leftmost 4 digits)
+17	—	ON/OFF count alarm setting	(rightmost 4 digits)
+18			(leftmost 4 digits)
+19	—	ON/OFF control hysteresis	(rightmost 4 digits)
+20			(leftmost 4 digits)
+21	—	Manual reset	(rightmost 4 digits)
+22			(leftmost 4 digits)
+23	—	SP setting lower limit	(rightmost 4 digits)
+24			(leftmost 4 digits)
+25	—	SP setting upper limit	(rightmost 4 digits)
+26			(leftmost 4 digits)
+27	—	SP rise rate limit	(rightmost 4 digits)
+28			(leftmost 4 digits)
+29	—	SP fall rate limit	(rightmost 4 digits)
+30			(leftmost 4 digits)
+31	—	MV rate-of-change limit	(rightmost 4 digits)
+32			(leftmost 4 digits)
+33	—	Secondary loop fixed SP	(rightmost 4 digits)
+34			(leftmost 4 digits)
+35	—	Secondary loop P	(rightmost 4 digits)
+36			(leftmost 4 digits)
+37	—	Secondary loop I	(rightmost 4 digits)
+38			(leftmost 4 digits)
+39	—	Secondary loop D	(rightmost 4 digits)
+40			(leftmost 4 digits)
+41	—	Secondary loop manual reset	(rightmost 4 digits)
+42			(leftmost 4 digits)

Offset	Contents (data format)	Data
+0	Number of receive data words (4 digits BCD)	0043
+1 to 2	Fixed SP (8 digits BCD)	00000000 to 09999000 F indicates a negative number.
+3 to 4	Control output 1 pulse cycle (8 digits BCD)	
+5 to 6	Control output 2 pulse cycle (8 digits BCD)	
+7 to 8	Fuzzy strength (8 digits BCD)	
+9 to 10	Cooling coefficient (8 digits BCD)	
+11 to 12	Heater burnout alarm setting (8 digits BCD)	
+13 to 14	Position-proportional dead band (8 digits BCD)	
+15 to 16	Switching output hysteresis (8 digits BCD)	
+17 to 18	ON/OFF count alarm setting (8 digits BCD)	
+19 to 20	ON/OFF control hysteresis (8 digits BCD)	
+21 to 22	Manual reset (8 digits BCD)	
+23 to 24	SP setting lower limit (8 digits BCD)	
+25 to 26	SP setting upper limit (8 digits BCD)	
+27 to 28	SP rise rate limit (8 digits BCD)	
+29 to 30	SP fall rate limit (8 digits BCD)	
+31 to 32	MV rate-of-change limit (8 digits BCD)	
+33 to 34	Secondary loop fixed SP (8 digits BCD)	
+35 to 36	Secondary loop P (8 digits BCD)	
+37 to 38	Secondary loop I (8 digits BCD)	
+39 to 40	Secondary loop D (8 digits BCD)	
+41 to 42	Secondary loop manual reset (8 digits BCD)	

Write Adjustment Parameters (Sequence No. 259)

Writes the adjust parameters in the parameter area.

Send Data Word Allocation (2nd Operand of PMCR)

First word of send data	+0	Number of send data words	
	+1	(Undefined)	Unit No.
	+2	— Fixed SP	(rightmost 4 digits)
	+3		(leftmost 4 digits)
	+4	— Control output 1 pulse cycle	(rightmost 4 digits)
	+5		(leftmost 4 digits)
	+6	— Control output 2 pulse cycle	(rightmost 4 digits)
	+7		(leftmost 4 digits)
	+8	— Fuzzy strength	(rightmost 4 digits)
	+9		(leftmost 4 digits)
	+10	— Cooling coefficient	(rightmost 4 digits)
	+11		(leftmost 4 digits)
	+12	— Heater burnout alarm setting	(rightmost 4 digits)
	+13		(leftmost 4 digits)
	+14	— Position-proportional dead band	(rightmost 4 digits)
	+15		(leftmost 4 digits)
	+16	— Switching output hysteresis	(rightmost 4 digits)
	+17		(leftmost 4 digits)
	+18	— ON/OFF count alarm setting	(rightmost 4 digits)
	+19		(leftmost 4 digits)
	+20	— ON/OFF control hysteresis	(rightmost 4 digits)
	+21		(leftmost 4 digits)
	+22	— Manual reset	(rightmost 4 digits)
	+23		(leftmost 4 digits)
	+24	— SP setting lower limit	(rightmost 4 digits)
	+25		(leftmost 4 digits)
	+26	— SP setting upper limit	(rightmost 4 digits)
	+27		(leftmost 4 digits)
	+28	— SP rise rate limit	(rightmost 4 digits)
	+29		(leftmost 4 digits)
	+30	— SP fall rate limit	(rightmost 4 digits)
	+31		(leftmost 4 digits)
	+32	— MV change rate limit	(rightmost 4 digits)
	+33		(leftmost 4 digits)
	+34	— Secondary loop fixed SP	(rightmost 4 digits)
	+35		(leftmost 4 digits)
	+36	— Secondary loop P	(rightmost 4 digits)
	+37		(leftmost 4 digits)
	+38	— Secondary loop I	(rightmost 4 digits)
	+39		(leftmost 4 digits)
	+40	— Secondary loop D	(rightmost 4 digits)
	+41		(leftmost 4 digits)
	+42	— Secondary loop manual reset	(rightmost 4 digits)
	+43		(leftmost 4 digits)

Offset	Contents (data format)	Data
+0	Number of send data words (4 digits BCD)	0044 (fixed)
+1	Unit No. (2 digits BCD)	00 to 31
+2 to 3	Fixed SP (8 digits BCD)	00000000 to 09999000
+4 to 5	Control output 1 pulse cycle (8 digits BCD)	
+6 to 7	Control output 2 pulse cycle (8 digits BCD)	
+8 to 9	Fuzzy strength (8 digits BCD)	
+10 to 11	Cooling coefficient (8 digits BCD)	
+12 to 13	Heater burnout alarm setting (8 digits BCD)	
+14 to 15	Position-proportional dead band (8 digits BCD)	
+16 to 17	Switching output hysteresis (8 digits BCD)	
+18 to 19	ON/OFF count alarm setting (8 digits BCD) value	
+20 to 21	ON/OFF control hysteresis (8 digits BCD)	
+22 to 23	Manual reset (8 digits BCD)	
+24 to 25	SP setting lower limit (8 digits BCD)	
+26 to 27	SP setting upper limit (8 digits BCD)	
+28 to 29	SP rise rate limit (8 digits BCD)	
+30 to 31	SP fall rate limit (8 digits BCD)	
+32 to 33	MV rate-of-change limit (8 digits BCD)	
+34 to 35	Secondary loop fixed SP (8 digits BCD)	
+36 to 37	Secondary loop P (8 digits BCD)	
+38 to 39	Secondary loop I (8 digits BCD)	
+40 to 41	Secondary loop D (8 digits BCD)	
+42 to 43	Secondary loop manual reset (8 digits BCD)	

Receive Data Word Allocation (3rd Operand of PMCR)

None.

Read PID Control Parameters 1 (Sequence No. 260)

Reads PID parameters No. 1 to 4 from PID control parameters in the parameter area and stores the results in the specified words.

Send Data Word Allocation (2nd Operand of PMCR)

First word of send data	+0	Number of send data words	
	+1	(Undefined)	Unit No.

Offset	Contents (data format)	Data
+0	Number of send data words (4 digits BCD)	0002 (fixed)
+1	Unit No. (2 digits BCD)	00 to 31

Receive Data Word Allocation (3rd Operand of PMCR)

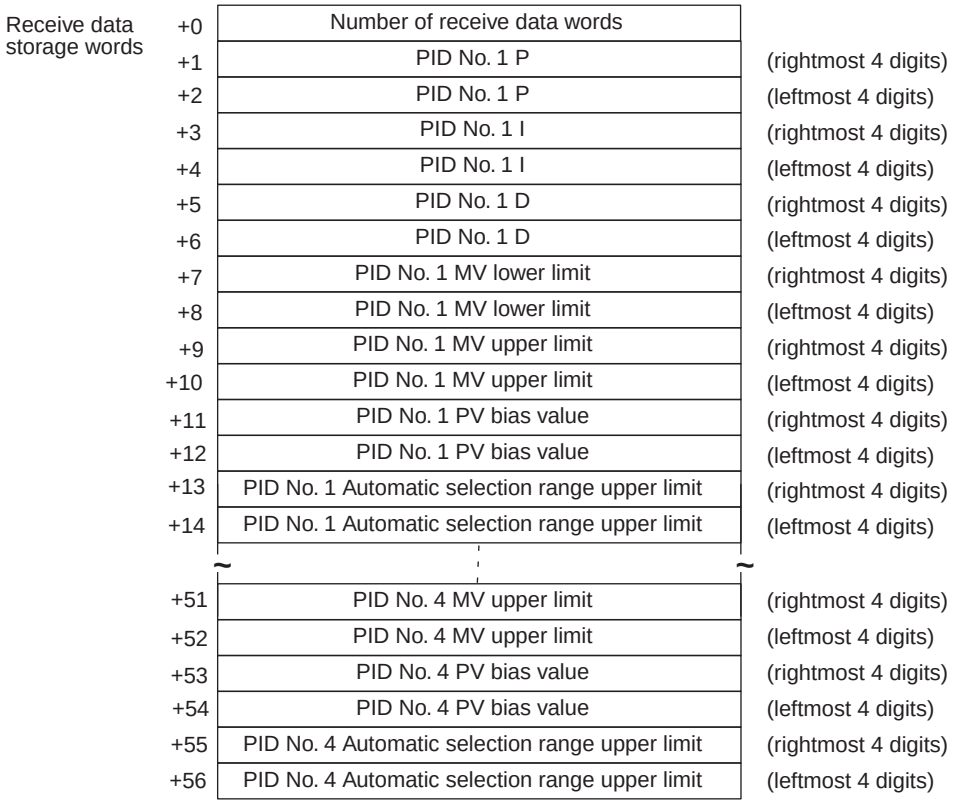

Offset	Contents (data format)	Data
+0	Number of receive data words (4 digits BCD)	0057
+1 to 2	PID No. 1 P (8 digits BCD)	00000000 to 09999000
+3 to 4	PID No. 1 I (8 digits BCD)	
+5 to 6	PID No. 1 D (8 digits BCD)	
+7 to 8	PID No. 1 MV lower limit (8 digits BCD)	
+9 to 10	PID No. 1 MV upper limit (8 digits BCD)	
+11 to 12	PID No. 1 PV bias value (8 digits BCD)	
+13 to 14	PID No. 1 Automatic selection range upper limit (8 digits BCD)	
	• • •	
+43 to 44	PID No. 4 P (8 digits BCD)	
+45 to 46	PID No. 4 I (8 digits BCD)	
+47 to 48	PID No. 4 D (8 digits BCD)	
+49 to 50	PID No. 4 MV lower limit (8 digits BCD)	
+51 to 52	PID No. 4 MV upper limit (8 digits BCD)	
+53 to 54	PID No. 4 PV bias value (8 digits BCD)	
+55 to 56	PID No. 4 Automatic selection range upper limit (8 digits BCD)	

Read PID Control Parameters 2 (Sequence No. 261)

Reads PID parameters No. 5 to 8 from the PID control parameters in the parameter area and stores the results in the specified words.

Send Data Word Allocation (2nd Operand of PMCR)

First word of send data	+0	Number of send data words	
	+1	(Undefined)	Unit No.

Offset	Contents (data format)	Data
+0	Number of send data words (4 digits BCD)	0002 (fixed)
+1	Unit No. (2 digits BCD)	00 to 31

Receive Data Word Allocation (3rd Operand of PMCR)

Receive data storage words	+0	Number of receive data words
	+1	PID No. 5 P (rightmost 4 digits)
	+2	PID No. 5 P (leftmost 4 digits)
	+3	PID No. 5 I (rightmost 4 digits)
	+4	PID No. 5 I (leftmost 4 digits)
	+5	PID No. 5 D (rightmost 4 digits)
	+6	PID No. 5 D (leftmost 4 digits)
	+7	PID No. 5 MV lower limit (rightmost 4 digits)
	+8	PID No. 5 MV lower limit (leftmost 4 digits)
	+9	PID No. 5 MV upper limit (rightmost 4 digits)
	+10	PID No. 5 MV upper limit (leftmost 4 digits)
	+11	PID No. 5 PV bias value (rightmost 4 digits)
	+12	PID No. 5 PV bias value (leftmost 4 digits)
	+13	PID No. 5 Automatic selection range upper limit (rightmost 4 digits)
	+14	PID No. 5 Automatic selection range upper limit (leftmost 4 digits)
	~	~
	+51	PID No. 8 MV upper limit (rightmost 4 digits)
	+52	PID No. 8 MV upper limit (leftmost 4 digits)
	+53	PID No. 8 PV bias value (rightmost 4 digits)
	+54	PID No. 8 PV bias value (leftmost 4 digits)
	+55	PID No. 8 Automatic selection range upper limit (rightmost 4 digits)
	+56	PID No. 8 Automatic selection range upper limit (leftmost 4 digits)

Offset	Contents (data format)	Data
+0	Number of receive data words (4 digits BCD)	0057
+1 to 2	PID No. 5 P (8 digits BCD)	00000000 to 09999000
+3 to 4	PID No. 5 I (8 digits BCD)	
+5 to 6	PID No. 5 D (8 digits BCD)	
+7 to 8	PID No. 5 MV lower limit (8 digits BCD)	
+9 to 10	PID No. 5 MV upper limit (8 digits BCD)	
+11 to 12	PID No. 5 PV bias value (8 digits BCD)	
+13 to 14	PID No. 5 Automatic selection range upper limit (8 digits BCD)	
	• • •	
+43 to 44	PID No. 8 P (8 digits BCD)	
+45 to 46	PID No. 8 I (8 digits BCD)	
+47 to 48	PID No. 8 D (8 digits BCD)	
+49 to 50	PID No. 8 MV lower limit (8 digits BCD)	
+51 to 52	PID No. 8 MV upper limit (8 digits BCD)	
+53 to 54	PID No. 8 PV bias value (8 digits BCD)	
+55 to 56	PID No. 8 Automatic selection range upper limit (8 digits BCD)	

Write PID Control Parameters 1 (Sequence No. 262)

Writes PID parameters No. 1 to 4 to the PID control parameters in the parameter area.

Send Data Word Allocation (2nd Operand of PMCR)

First word of send data			
	+0	Number of send data words	
	+1	(Undefined) / Unit No.	
	+2	PID No. 1 P	(rightmost 4 digits)
	+3	PID No. 1 P	(leftmost 4 digits)
	+4	PID No. 1 I	(rightmost 4 digits)
	+5	PID No. 1 I	(leftmost 4 digits)
	+6	PID No. 1 D	(rightmost 4 digits)
	+7	PID No. 1 D	(leftmost 4 digits)
	+8	PID No. 1 MV lower limit	(rightmost 4 digits)
	+9	PID No. 1 MV lower limit	(leftmost 4 digits)
	+10	PID No. 1 MV upper limit	(rightmost 4 digits)
	+11	PID No. 1 MV upper limit	(leftmost 4 digits)
	+12	PID No. 1 PV bias value	(rightmost 4 digits)
	+13	PID No. 1 PV bias value	(leftmost 4 digits)
	+14	PID No. 1 Automatic selection range upper limit	(rightmost 4 digits)
	+15	PID No. 1 Automatic selection range upper limit	(leftmost 4 digits)
	~	~	~
	+52	PID No. 4 MV upper limit	(rightmost 4 digits)
	+53	PID No. 4 MV upper limit	(leftmost 4 digits)
	+54	PID No. 4 PV bias value	(rightmost 4 digits)
	+55	PID No. 4 PV bias value	(leftmost 4 digits)
	+56	PID No. 4 Automatic selection range upper limit	(rightmost 4 digits)
	+57	PID No. 4 Automatic selection range upper limit	(leftmost 4 digits)

Offset	Contents (data format)	Data
+0	Number of send data words (4 digits BCD)	0058 (fixed)
+1	Unit No. (2 digits BCD)	00 to 31
+2 to 3	PID No. 1 P (8 digits BCD)	00000000 to 09999000
+4 to 5	PID No. 1 I (8 digits BCD)	
+6 to 7	PID No. 1 D (8 digits BCD)	
+8 to 9	PID No. 1 MV lower limit (8 digits BCD)	
+10 to 11	PID No. 1 MV upper limit (8 digits BCD)	
+12 to 13	PID No. 1 PV bias value (8 digits BCD)	
+14 to 15	PID No. 1 Automatic selection range upper limit (8 digits BCD)	
	• • •	
+44 to 45	PID No. 4 P (8 digits BCD)	
+46 to 47	PID No. 4 I (8 digits BCD)	
+48 to 49	PID No. 4 D (8 digits BCD)	
+50 to 51	PID No. 4 MV lower limit (8 digits BCD)	
+52 to 53	PID No. 4 MV upper limit (8 digits BCD)	
+54 to 55	PID No. 4 PV bias value (8 digits BCD)	
+56 to 57	PID No. 4 Automatic selection range upper limit (8 digits BCD)	

Receive Data Word Allocation (3rd Operand of PMCR)

None.

Write PID Control Parameters 2 (Sequence No. 263)

Writes the PID parameters No. 5 to 8 to the PID control parameters in the parameter area.

Send Data Word Allocation (2nd Operand of PMCR)

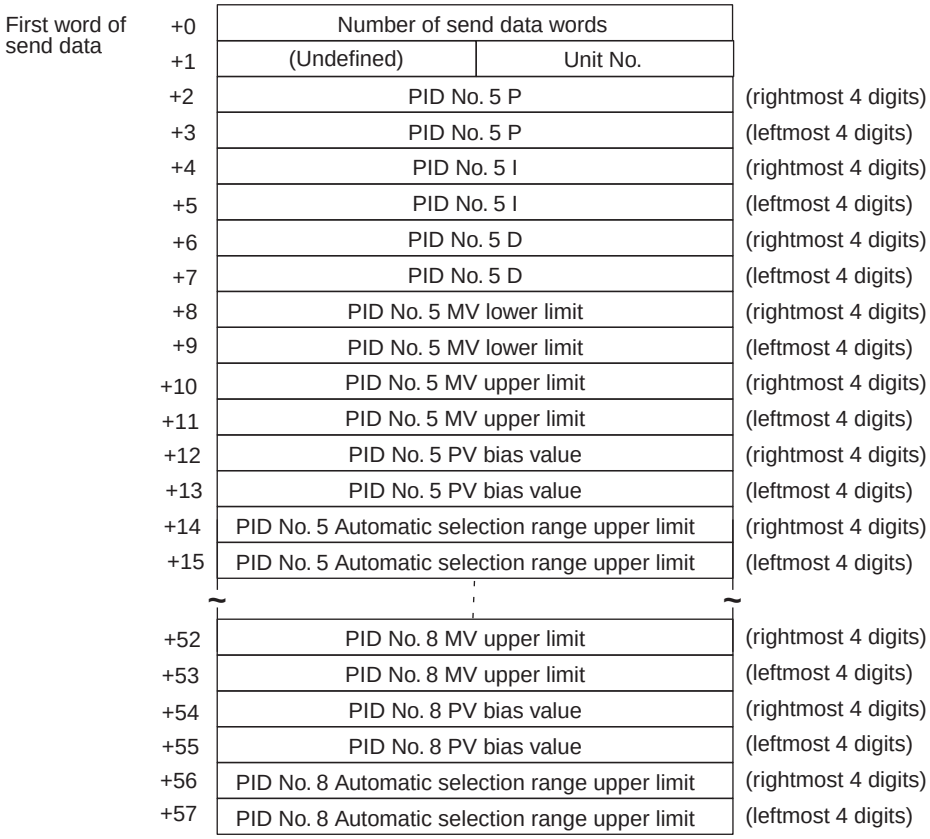

Offset	Contents (data format)	Data
+0	Number of send data words (4 digits BCD)	0058 (fixed)
+1	Unit No. (2 digits BCD)	00 to 31
+2 to 3	PID No. 5 P (8 digits BCD)	00000000 to 09999000
+4 to 5	PID No. 5 I (8 digits BCD)	
+6 to 7	PID No. 5 D (8 digits BCD)	
+8 to 9	PID No. 5 MV lower limit (8 digits BCD)	
+10 to 11	PID No. 5 MV upper limit (8 digits BCD)	
+12 to 13	PID No. 5 PV bias value (8 digits BCD)	
+14 to 15	PID No. 5 Automatic selection range upper limit (8 digits BCD)	
	• • •	
+44 to 45	PID No. 8 P (8 digits BCD)	
+46 to 47	PID No. 8 I (8 digits BCD)	
+48 to 49	PID No. 8 D (8 digits BCD)	
+50 to 51	PID No. 8 MV lower limit (8 digits BCD)	
+52 to 53	PID No. 8 MV upper limit (8 digits BCD)	
+54 to 55	PID No. 8 PV bias value (8 digits BCD)	
+56 to 57	PID No. 8 Automatic selection range upper limit (8 digits BCD)	

Receive Data Word Allocation (3rd Operand of PMCR)

None.

Read Local SP (Sequence No. 264)

Reads the local SP in the program parameter area.

Send Data Word Allocation (2nd Operand of PMCR)

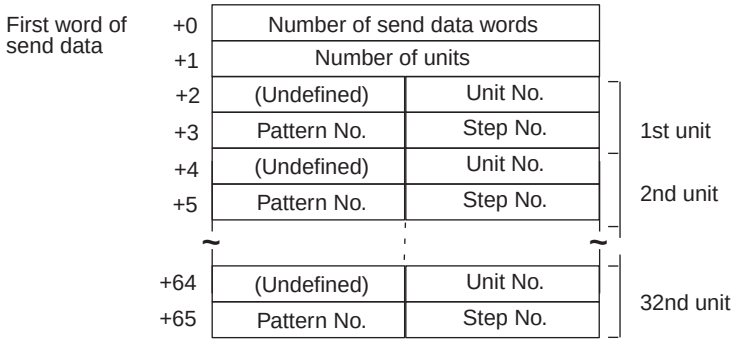

Offset	Contents (data format)	Data
+0	Number of send data words (4 digits BCD)	Number of units × 2 + 2
+1	Number of units (4 digits BCD)	0001 to 0032
+2	1st unit Unit No. (2 digits BCD)	00 to 31
+3	1st unit Pattern No. (2 digits BCD) Step No. (2 digits BCD)	 00 to 63 00 to 63
	• • •	
+64	32nd unit Unit No. (2 digits BCD)	00 to 31
+65 (max.)	32nd unit Pattern No. (2 digits BCD) Step No. (2 digits BCD)	 00 to 63 00 to 63

Receive Data Word Allocation (3rd Operand of PMCR)

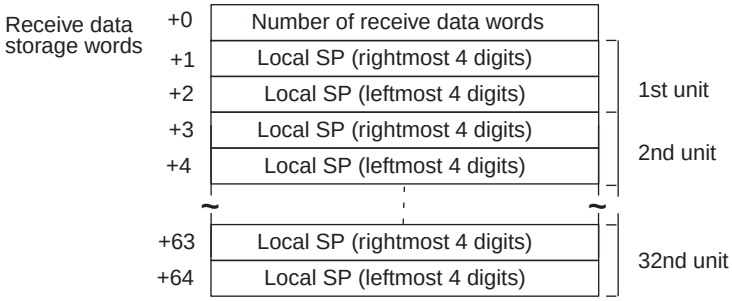

Offset	Contents (data format)	Data
+0	Number of receive data words (4 digits BCD)	Number of units × 2 + 1
+1	1st unit Local SP (rightmost 4 digits) (4 digits BCD)	00000000 to 09999000 F indicates a negative number.
+2	1st unit Local SP (leftmost 4 digits) (4 digits BCD)	
+3	2nd unit Local SP (rightmost 4 digits) (4 digits BCD)	00000000 to 09999000
+4	2nd unit Local SP (leftmost 4 digits) (4 digits BCD)	
	• • •	
+63	32nd unit Local SP (rightmost 4 digits) (4 digits BCD)	00000000 to 09999000
+64	32nd unit Local SP (leftmost 4 digits) (4 digits BCD)	

Write Local SP (Sequence No. 265)

Writes the local SP to the program parameter area.

Send Data Word Allocation (2nd Operand of PMCR)

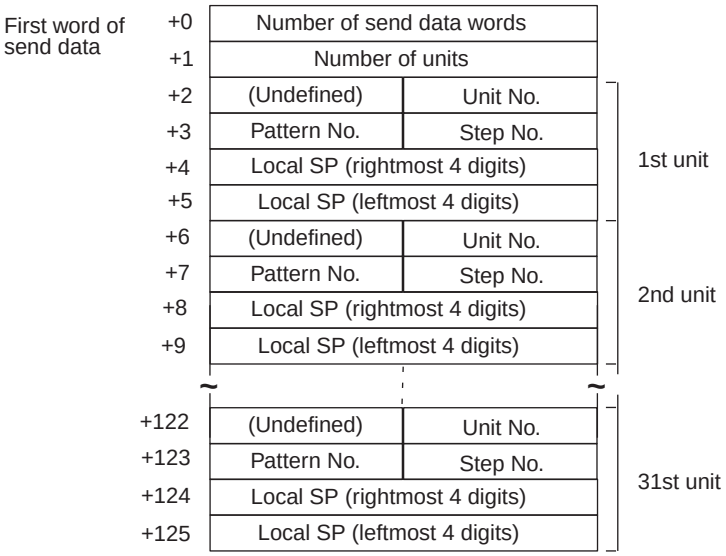

Offset	Contents (data format)	Data
+0	Number of send data words (4 digits BCD)	Number of units × 4 + 2
+1	Number of units (4 digits BCD)	0001 to 0031
+2	1st unit Unit No. (2 digits BCD)	00 to 31
+3	1st unit Pattern No. (2 digits BCD) Step No. (2 digits BCD)	 00 to 63 00 to 63
+4	1st unit Local SP (rightmost 4 digits) (4 digits BCD)	00000000 to 09999000
+5	1st unit Local SP (leftmost 4 digits) (4 digits BCD)	
	• • •	
+122	31st unit Unit No. (2 digits BCD)	00 to 31
+123	31st unit Pattern No. (2 digits BCD) Step No. (2 digits BCD)	 00 to 63 00 to 63
+124	31st unit Local SP (rightmost 4 digits) (4 digits BCD)	00000000 to 09999000
+125	31st unit Local SP (leftmost 4 digits) (4 digits BCD)	

Receive Data Word Allocation (3rd Operand of PMCR)

None.

Read Program Parameters (Sequence No. 266)

Reads the local SP, step time, PID set No., wait code, and events from 1 to 10 set values in the program parameter area.

Send Data Word Allocation (2nd Operand of PMCR)

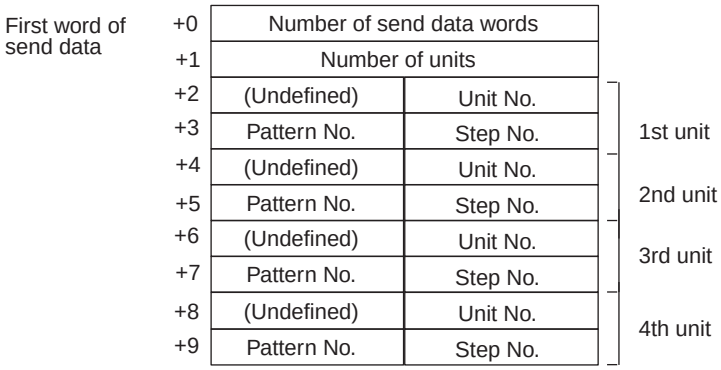

Offset	Contents (data format)	Data
+0	Number of send data words (4 digits BCD)	Number of units × 2 + 2
+1	Number of units (4 digits BCD)	0001 to 0004
+2	1st unit Unit No. (2 digits BCD)	00 to 31
+3	1st unit Pattern No. (2 digits BCD) Step No. (2 digits BCD)	 00 to 63 00 to 63
	• • •	
+8	4th unit Unit No. (2 digits BCD)	00 to 31
+9 (max.)	4th unit Pattern No. (2 digits BCD) Step No. (2 digits BCD)	 00 to 63 00 to 63

Receive Data Word Allocation (3rd Operand of PMCR)

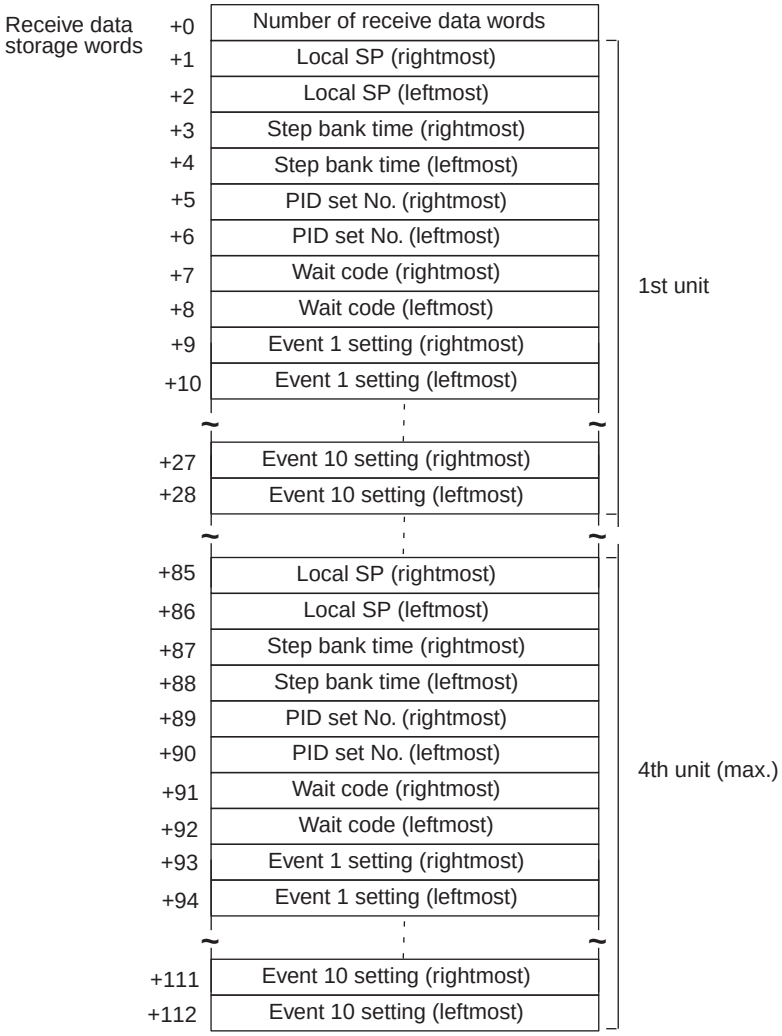

Offset	Contents (data format)	Data
+0	Number of receive data words (4digits BCD)	Number of units × 28 + 1
+1 to 2	1st unit Local SP (8 digits BCD)	00000000 to 09999000 F indicates a negative number.
+3 to 4	1st unit Step time) (8 digits BCD)	
+5 to 6	1st unit PID set No. (8 digits BCD)	
+7 to 8	1st unit Wait code (8 digits BCD)	
+9 to 10	1st unit Event 1 setting (8 digits BCD)	
+11 to 12	1st unit Event 2 setting (8 digits BCD)	
	• •	
+27 to 28	1st unit Event 10 setting (8 digits BCD)	
+29 to 30	1st unit Local SP (8 digits BCD)	
	• •	
+109 to 110	4th unit Event 9 setting (8 digits BCD)	
+111 to 112 (max.)	4th unit Event 10 setting (8 digits BCD)	

Write Program Parameters (Sequence No. 267)

Writes the local SP, step time, PID set No., wait code, and events from 1 to 10 settings in the program parameter area.

Send Data Word Allocation (2nd Operand of PMCR)

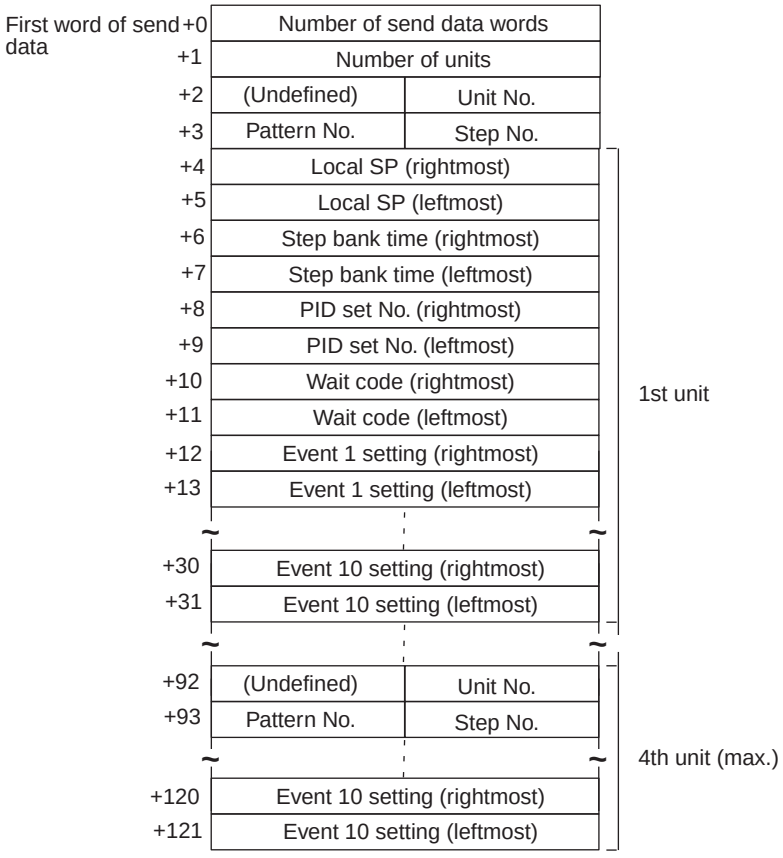

Offset	Contents (data format)	Data
+0	Number of send data words (4 digits BCD)	Number of units × 30 + 2
+1	Number of units (4 digits BCD)	0001 to 0004
+2	1st unit Unit No. (2 digits BCD)	00 to 31
+3	1st unit Pattern No. (2 digits BCD) Step No. (2 digits BCD)	 00 to 63 00 to 63
+4 to 5	1st unit Local SP (8 digits BCD)	00000000 to 09999000
+6 to 7	1st unit Step time (8 digits BCD)	
+8 to 9	1st unit PID set No. (8 digits BCD)	
+10 to 11	1st unit Wait code (8 digits BCD)	
+12 to 13	1st unit Event 1 setting (8 digits BCD)	
+14 to 15	1st unit Event 2 setting (8 digits BCD)	
	• •	
+30 to 31	1st unit Event 10 setting (8 digits BCD)	
+32 to 33	2nd unit Local SP (8 digits BCD)	
	• •	
+111 to 112	4th unit Event 9 setting (8 digits BCD)	
+120 to 121 (max.)	4th unit Event 10 setting (8 digits BCD)	

Receive Data Word Allocation (3rd Operand of PMCR)

None.

Remote Setting Mode (Sequence No. 268)

Switches the setting mode to the remote setting mode.

Send Data Word Allocation (2nd Operand of PMCR)

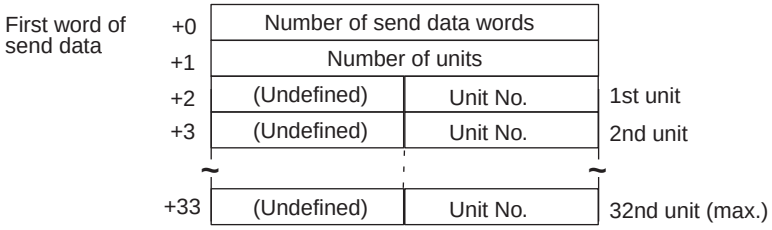

Offset	Contents (data format)	Data
+0	Number of send data words (4 digits BCD)	Number of units + 2
+1	Number of units (4 digits BCD)	0001 to 0032
+2	1st unit Unit No. (2 digits BCD)	00 to 31
+3	2nd unit Unit No. (2 digits BCD)	00 to 31
	• • •	
+33 (max.)	32nd unit Unit No. (2 digits BCD)	00 to 31

Receive Data Word Allocation (3rd Operand of PMCR)

None.

Local Setting Mode (Sequence No. 269)

Switches the setting mode to the local setting mode.

Send Data Word Allocation (2nd Operand of PMCR)

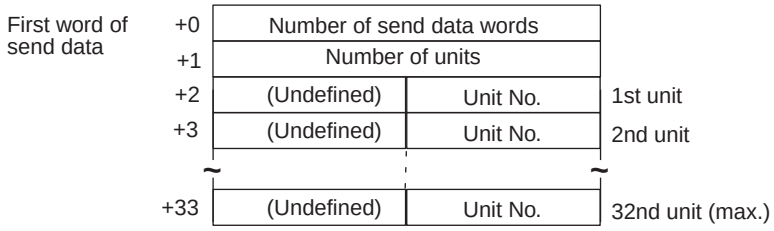

Offset	Contents (data format)	Data
+0	Number of send data words (4 digits BCD)	Number of units + 2
+1	Number of units (4 digits BCD)	0001 to 0032
+2	1st unit Unit No. (2 digits BCD)	00 to 31
+3	2nd unit Unit No. (2 digits BCD)	00 to 31
	• • •	
+33 (max.)	32nd unit Unit No. (2 digits BCD)	00 to 31

Receive Data Word Allocation (3rd Operand of PMCR)

None.

External Setting Mode (Sequence No. 270)

Switches the setting mode to the external setting mode.

Send Data Word Allocation (2nd Operand of PMCR)

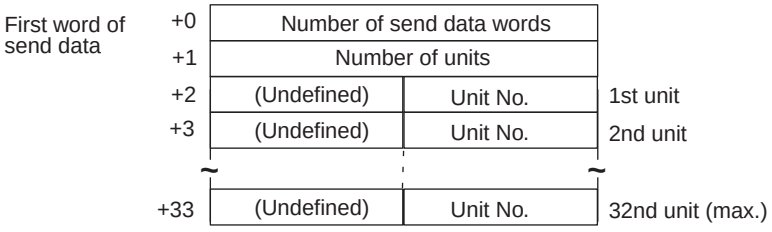

Offset	Contents (data format)	Data
+0	Number of send data words (4 digits BCD)	Number of units + 2
+1	Number of units (4 digits BCD)	0001 to 0032
+2	1st unit Unit No. (2 digits BCD)	00 to 31
+3	2nd unit Unit No. (2 digits BCD)	00 to 31
	• • •	
+33 (max.)	32nd unit Unit No. (2 digits BCD)	00 to 31

Receive Data Word Allocation (3rd Operand of PMCR)

None.

Run Command (Sequence No. 271)

Starts control.

Send Data Word Allocation (2nd Operand of PMCR)

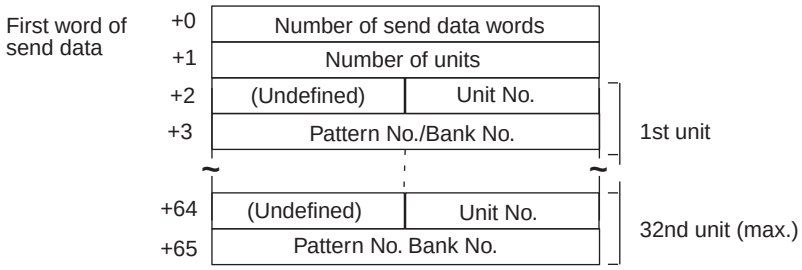

Offset	Contents (data format)	Data
+0	Number of send data words (4 digits BCD)	Number of units × 2 + 2
+1	Number of units (4 digits BCD)	0001 to 0032
+2	1st unit Unit No. (2 digits BCD)	00 to 31
+3	1st unit Pattern No./Bank No. (4 digits BCD)	0000 to 0063
+24	2nd unit Unit No. (2 digits BCD)	00 to 31
	• • •	
+64	32nd unit Unit No. (2 digits BCD)	00 to 31
+65 (max.)	32nd unit Pattern No./Bank No. (4 digits BCD)	0000 to 0063

Receive Data Word Allocation (3rd Operand of PMCR)

None.

Reset (Stop) (Sequence No. 272)

Stops control.

Send Data Word Allocation (2nd Operand of PMCR)

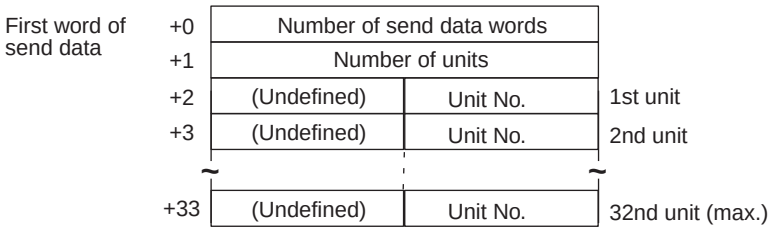

Offset	Contents (data format)	Data
+0	Number of send data words (4 digits BCD)	Number of units + 2
+1	Number of units (4 digits BCD)	0001 to 0032
+2	1st unit Unit No. (2 digits BCD)	00 to 31
+3	2nd unit Unit No. (2 digits BCD)	00 to 31
	• • •	
+33 (max.)	32nd unit Unit No. (2 digits BCD)	00 to 31

Receive Data Word Allocation (3rd Operand of PMCR)

None.

Auto Mode (Sequence No. 273)

Switches the control mode to the auto mode.

Send Data Word Allocation (2nd Operand of PMCR)

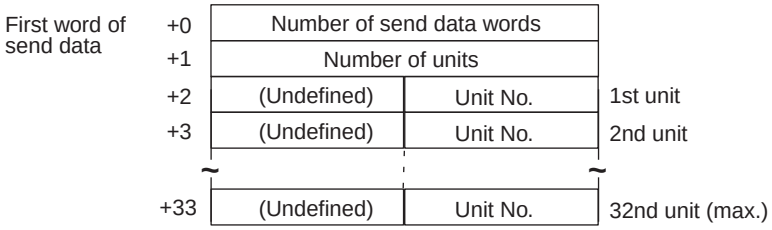

Offset	Contents (data format)	Data
+0	Number of send data words (4 digits BCD)	Number of units + 2
+1	Number of units (4 digits BCD)	0001 to 0032
+2	1st unit Unit No. (2 digits BCD)	00 to 31
+3	2nd unit Unit No. (2 digits BCD)	00 to 31
	• • •	
+33 (max.)	32nd unit Unit No. (2 digits BCD)	00 to 31

Receive Data Word Allocation (3rd Operand of PMCR)

None.

Manual Mode (Sequence No. 274)

Switches the control mode to the manual mode.

Send Data Word Allocation (2nd Operand of PMCR)

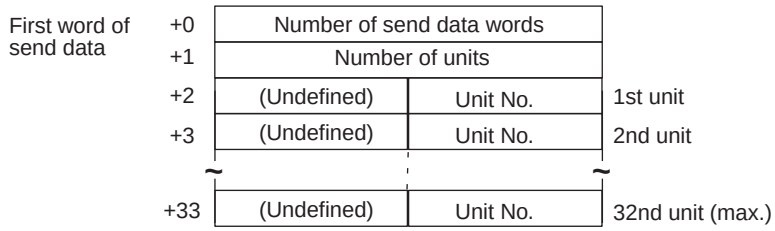

Offset	Contents (data format)	Data
+0	Number of send data words (4 digits BCD)	Number of units + 2
+1	Number of units (4 digits BCD)	0001 to 0032
+2	1st unit Unit No. (2 digits BCD)	00 to 31
+3	2nd unit Unit No. (2 digits BCD)	00 to 31
	• • •	
+33 (max.)	32nd unit Unit No. (2 digits BCD)	00 to 31

Receive Data Word Allocation (3rd Operand of PMCR)

None.

Execute A.T. (Sequence No. 275)

Executes A.T.

Send Data Word Allocation (2nd Operand of PMCR)

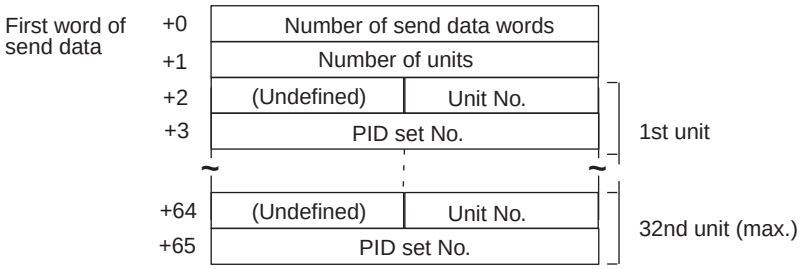

Offset	Contents (data format)	Data
+0	Number of send data words (4 digits BCD)	Number of units × 2 + 2
+1	Number of units (4 digits BCD)	0001 to 0032
+2	1st unit Unit No. (2 digits BCD)	00 to 31
+3	1st unit PID set No. (4 digits BCD)	0000 to 0008
+4	2nd unit Unit No. (2 digits BCD)	00 to 31
	• • •	
+64	32nd unit Unit No. (2 digits BCD)	00 to 31
+65 (max.)	32nd unit PID set No. (4 digits BCD)	0000 to 0008

Receive Data Word Allocation (3rd Operand of PMCR)

None.

Cancel A.T. (Sequence No. 276)

Cancels A.T.

Send Data Word Allocation (2nd Operand of PMCR)

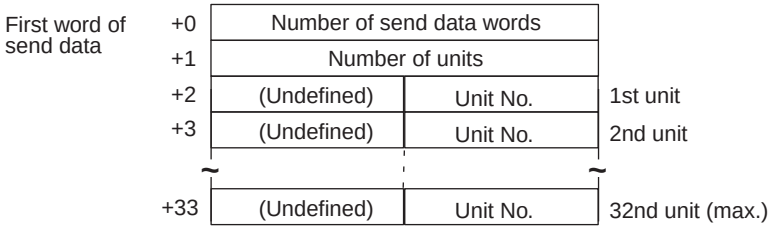

Offset	Contents (data format)	Data
+0	Number of send data words (4 digits BCD)	Number of units + 2
+1	Number of units (4 digits BCD)	0001 to 0032
+2	1st unit Unit No. (2 digits BCD)	00 to 31
+3	2nd unit Unit No. (2 digits BCD)	00 to 31
	• • •	
+33 (max.)	32nd unit Unit No. (2 digits BCD)	00 to 31

Receive Data Word Allocation (3rd Operand of PMCR)

None.

Change Pattern No. (Sequence No. 277)

Changes the pattern number.

Send Data Word Allocation (2nd Operand of PMCR)

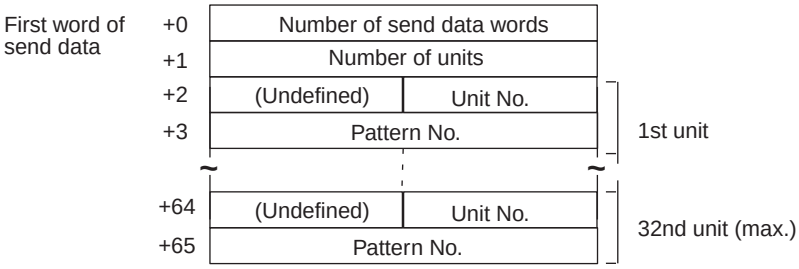

Offset	Contents (data format)	Data
+0	Number of send data words (4 digits BCD)	Number of units × 2 + 2
+1	Number of units (4 digits BCD)	0001 to 0032
+2	1st unit Unit No. (2 digits BCD)	00 to 31
+3	1st unit Pattern No. (4 digits BCD)	0001 to 0063
+4	2nd unit Unit No. (2 digits BCD)	00 to 31
	• • •	
+64	32nd unit Unit No. (2 digits BCD)	00 to 31
+65 (max.)	32nd unit Pattern No. (4 digits BCD)	0001 to 0063

Receive Data Word Allocation (3rd Operand of PMCR)

None.

Change Bank No. (Sequence No. 278)

Changes the bank number.

Send Data Word Allocation (2nd Operand of PMCR)

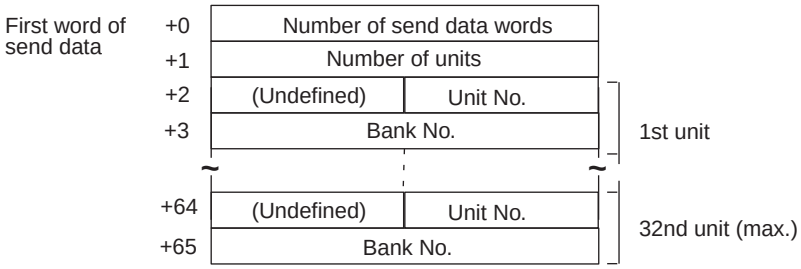

Offset	Contents (data format)	Data
+0	Number of send data words (4 digits BCD)	Number of units × 2 + 2
+1	Number of units (4 digits BCD)	0001 to 0032
+2	1st unit Unit No. (2 digits BCD)	00 to 31
+3	1st unit Bank No. (4 digits BCD)	0000 to 0007
+4	2nd unit Unit No. (2 digits BCD)	00 to 31
	• • •	
+64	32nd unit Unit No. (2 digits BCD)	00 to 31
+65 (max.)	32nd unit Bank No. (4 digits BCD)	0000 to 0007

Receive Data Word Allocation (3rd Operand of PMCR)

None.

Read Controller Status (Sequence No. 279)

Reads the Controller status.

Send Data Word Allocation (2nd Operand of PMCR)

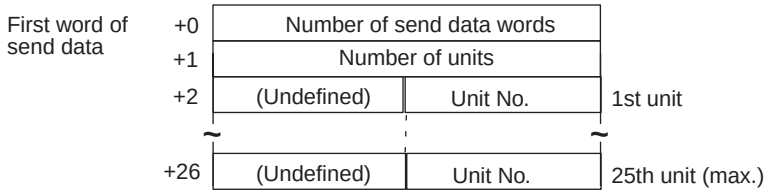

Offset	Contents (data format)	Data
+0	Number of send data words (4 digits BCD)	Number of units + 2
+1	Number of units (4 digits BCD)	0001 to 0025
+2	1st unit Unit No. (2 digits BCD)	00 to 31
	• • •	
+26 (max.)	25th unit Unit No. (2 digits BCD)	00 to 31

Receive Data Word Allocation (3rd Operand of PMCR)

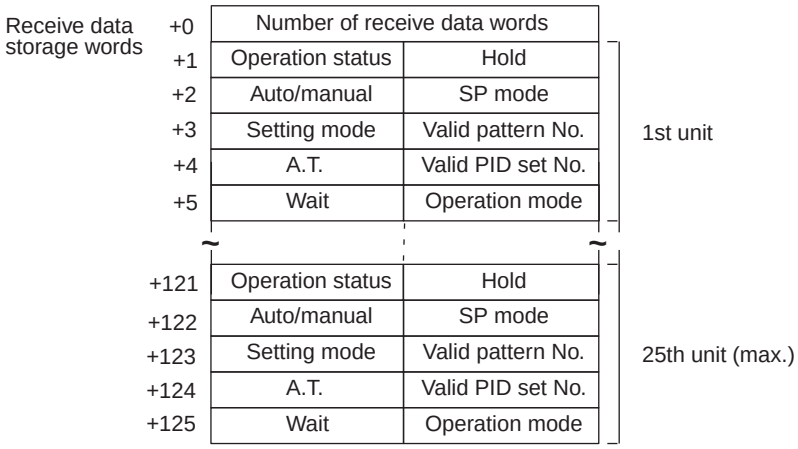

Offset	Contents (data format)	Data
+0	Number of receive data words (4 digits BCD)	Number of units × 5 + 1
+1	1st unit Operation status (2 digits BCD)	 00: Reset 01: Run
	Hold (2 digits BCD)	00: Not hold 01: Hold
+2	1st unit Auto/manual (2 digits BCD)	 00: Auto mode 01: Manual mode
	SP mode (2 digits BCD)	00: Local SP mode 01: Remote SP mode 02: Fixed SP mode
+3	1st unit Setting mode (2 digits BCD)	 00: Local setting mode 01: Remote setting mode 02: External setting mode
	Valid pattern No. (2 digits BCD)	00 to 63
+4	1st unit A.T. (2 digits BCD)	 00: Not A.T. 01: A.T.
	Valid PD set No. (2 digits Hex)	01 to 08
+5	1st unit Wait (2 digits BCD)	 00: Not waiting 01: Waiting 02: Wait alarm output
	Operation mode (2 digits BCD)	00: Setting level 1 (without technical mode) 01: Setting level 1 (with technical mode) 02: Setting level 2 (without technical mode) 03: Setting level 2 (with technical mode)
	• • •	
+125 (max.)	25th unit Wait (2 digits BCD)	 00: Not waiting 01: Waiting 02: Wait alarm output
	Operation mode (2 digits BCD)	00: Setting level 1 (without technical mode) 01: Setting level 1 (with technical mode) 02: Setting level 2 (without technical mode) 03: Setting level 2 (with technical mode)

General-purpose Command (Sequence No. 280)

Sends the specified data and stores the received data in the specified words.

Send Data Word Allocation (2nd Operand of PMCR)

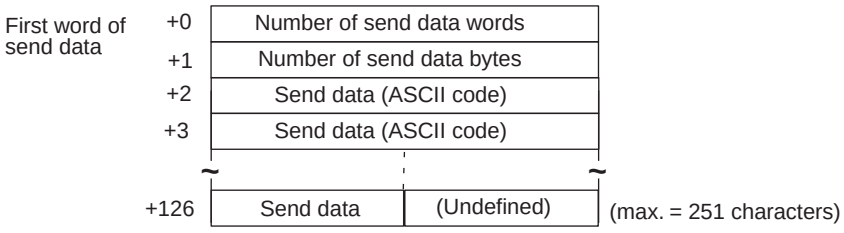

Offset	Contents (data format)	Data
+0	Number of send data words (4 digits BCD)	0001 to 0128
+1	Number of send data bytes	0001 to 0251 The number of send bytes not including @, the FCS, or the terminator.
+2	Send data (ASCII 2 characters)	Refer to the manual for the ES100□. Use ASCII (Up to 251 characters total.)
	• • •	
+127 (max.)	Send data (ASCII 1 characters)	

Receive Data Word Allocation (3rd Operand of PMCR)

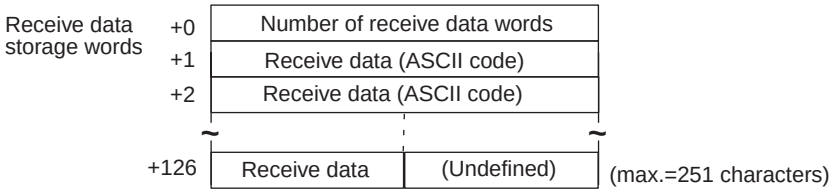

Offset	Contents (data format)	Data
+0	Number of receive data words (4 digits BCD)	0001 to 0127
+1	Receive data (ASCII 2 characters)	Refer to the manual for the ES100□. Returned as ASCII (Up to 251 characters total.)
	• • •	
+126 (max.)	Receive data (ASCII 1 characters)	

1. At transmission, a header code “@” is attached before the data and the FCS and a terminator “*”CR are attached following the send data.

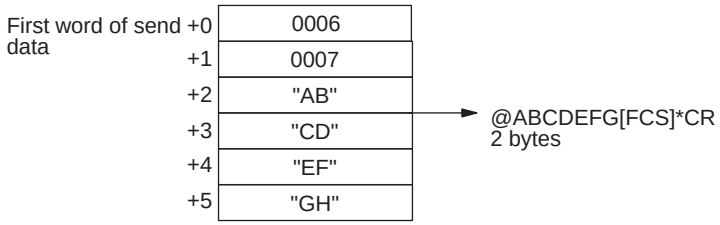

2. At reception, data excluding the header code “@” at the beginning of the receive data and the FCS and terminator “*”CR at the end of the data is stored in the receive data storage words.

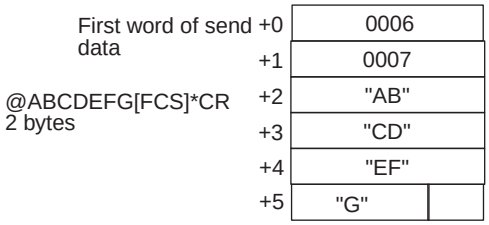

3. Refer to the manual for the ES100□ for the contents of send data and receive data.

Appendix I

K3T□ Intelligent Signal Processor Protocol

The K3T□ Intelligent Signal Processor Protocol is used to make various settings or control remotely the Intelligent Signal Processor connected to the Serial Communications Board via RS-232C or RS-422A/485 cable.

Protocol Configuration

The configuration of the K3T□ Intelligent Signal Processor Protocol is shown as follows:

Sequence No.	Communications sequence name	Function	Ladder interface		Notes
			Send word allocation	Receive word allocation	
300	Reset (by unit number)	Performs the same processing as when an input is received on the reset terminal.	Yes	No	
301	Reset (continuous units)	Performs the same processing as when an input is received on the reset terminal.	Yes	No	
302	Write set value (by unit number)	Writes the set value HH, H, L, or LL.	Yes	No	See Note1
303	Write set value HH (continuous units)	Writes the set value HH.	Yes	No	See Note1
304	Write set value H (continuous units)	Writes the set value H.	Yes	No	See Note1
305	Write set value L (continuous units)	Writes the set value L.	Yes	No	See Note1
306	Write set value LL (continuous units)	Writes the set value LL.	Yes	No	See Note1
307	Write set value with bank (by unit number)	Writes the set value to a bank which is not in use (K3TR: HH to LL, K3TC: O1 to O5).	Yes	No	See Note2
308	Write set value HH with bank (continuous units)	Writes the set value HH to a bank which is not in use.	Yes	No	See Note1
309	Write set value H with bank (continuous units)	Writes the set value H to a bank which is not in use.	Yes	No	See Note1
310	Write set value L with bank (continuous units)	Writes the set value L to a bank which is not in use.	Yes	No	See Note1
311	Write set value LL with bank (continuous units)	Writes the set value LL to a bank which is not in use.	Yes	No	See Note1
312	Write set value O5 with bank (continuous units)	Writes the set value O5 to a bank which is not in use.	Yes	No	See Note1
313	Write set value O4 with bank (continuous units)	Writes the set value O4 to a bank which is not in use.	Yes	No	See Note1
314	Write set value O3 with bank (continuous units)	Writes the set value O3 to a bank which is not in use.	Yes	No	See Note1
315	Write set value O2 with bank (continuous units)	Writes the set value O2 to a bank which is not in use.	Yes	No	See Note1
316	Write set value O1 with bank (continuous units)	Writes the set value O1 to a bank which is not in use.	Yes	No	See Note1
317	Read set value (by unit number)	Reads the set value HH, H, L, or LL.	Yes	Yes	See Note1
318	Read set value HH (continuous units)	Reads the set value HH.	Yes	Yes	See Note1
319	Read set value H (continuous units)	Reads the set value H.	Yes	Yes	See Note1
320	Read set value L (continuous units)	Reads the set value L.	Yes	Yes	See Note1

Sequence No.	Communications sequence name	Function	Ladder interface		Notes
			Send word allocation	Receive word allocation	
321	Read set value LL (continuous units)	Reads the set value LL.	Yes	Yes	See Note1
322	Read set value with bank (by unit number)	Reads set value of a bank which is not in use (K3TR: HH to LL, K3TC: O1 to O5).	Yes	Yes	See Note2
323	Read set value HH with bank (continuous units)	Reads the set value HH of a bank which is not in use.	Yes	Yes	See Note1
324	Read set value H with bank (continuous units)	Reads the set value H of a bank which is not in use.	Yes	Yes	See Note1
325	Read set value L with bank (continuous units)	Reads the set value L of a bank which is not in use.	Yes	Yes	See Note1
326	Read set value LL with bank (continuous units)	Reads the set value LL of a bank which is not in use.	Yes	Yes	See Note1
327	Read set value O5 with bank (continuous units)	Reads the set value O5 of a bank which is not in use.	Yes	Yes	See Note1
328	Read set value O4 with bank (continuous units)	Reads the set value O4 of a bank which is not in use.	Yes	Yes	See Note1
329	Read set value O3 with bank (continuous units)	Reads the set value O3 of a bank which is not in use.	Yes	Yes	See Note1
330	Read set value O2 with bank (continuous units)	Reads the set value O2 of a bank which is not in use.	Yes	Yes	See Note1
331	Read set value O1 with bank (continuous units)	Reads the set value O1 of a bank which is not in use.	Yes	Yes	See Note1
332	Read holding data (by unit number)	Reads the peak/bottom data (maximum, minimum).	Yes	Yes	See Note3
333	Read holding data PH (continuous units)	Reads the peak data (maximum).	Yes	Yes	See Note3
334	Read holding data BH (continuous units)	Reads the bottom data (minimum).	Yes	Yes	See Note3
335	Read display value (PV) (by unit number)	Reads the display value (PV).	Yes	Yes	
336	Read display value (PV) (continuous units)	Reads the display value (PV).	Yes	Yes	
337	Read model (by unit number)	Reads the model data.	Yes	Yes	
338	Read model (continuous units)	Reads the model data.	Yes	Yes	
339	General-purpose command	Send specified data or receives specified data and writes it to the receive data words.	Yes	Yes	

Note 1. Special specifications are required to use communications + comparison output.

2. Special specifications are required to use communications + comparison output for the K3TR and K3TC. The operands HH, H, L, and LL are for the K3TR, and the operands O5, O4, O3, O2, and O1 are for the K3TC.

3. Not available for the K3TC.

4. **Ladder Interface Settings**
   YES: User settings are required for the 2nd and 3rd operands of PMCR.
   NO: Send word allocation: Set a dummy word address for the 3rd operand (D).
   Receive word allocation: Set the constant 0000 for the 2rd operand (S).

Connections

The connections used for the K3T□ Intelligent Signal Processor Protocol are shown below.

RS-232C Connections

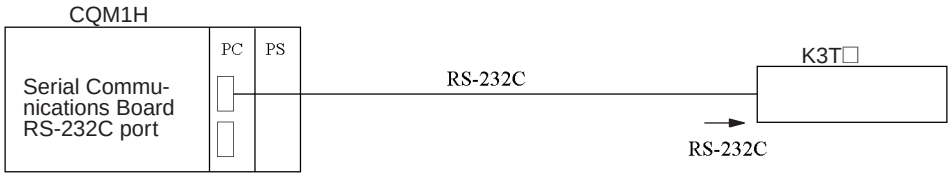

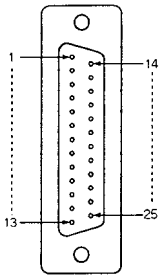

Signal name	Abbreviation	Signal direction	Pin No.
Protective ground or earth	FG	–	1
Signal ground or common return line	SG	–	7
Send data	SD	Output	2
Receive data	RD	Input	3
Request to send	RS	Output	4
Clear to send	CS	Input	5
Data set ready	DR	Input	6
Data terminal ready	ER	Output	20

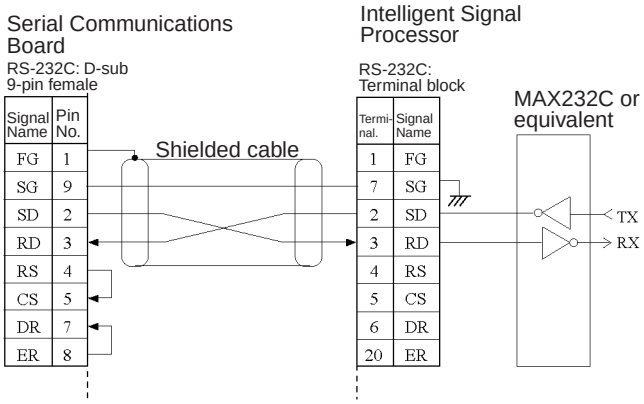

Note 1. The connection configuration is a one-to-one configuration and the maximum cable length is 15 m.

2. Use shielded twisted-pair cable (AWG28i or greater).

RS422A/485 Connections

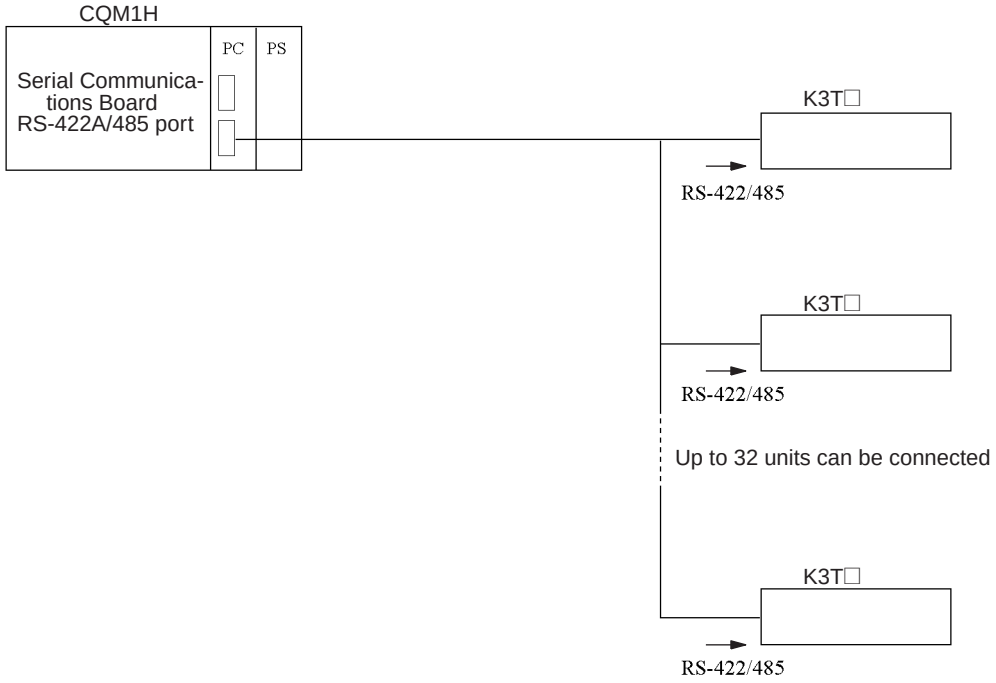

- **RS-422A**

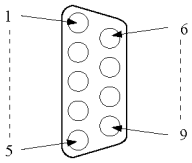

Signal name	Abbreviation	Signal direction	Pin No.
Send data A	SDA	Output	9
Send data B	SDB	Output	5
Receive data A	RDA	Output	6
Receive data B	RDB	Input	1
Signal ground	SG	–	3
Protective ground	FG	–	7

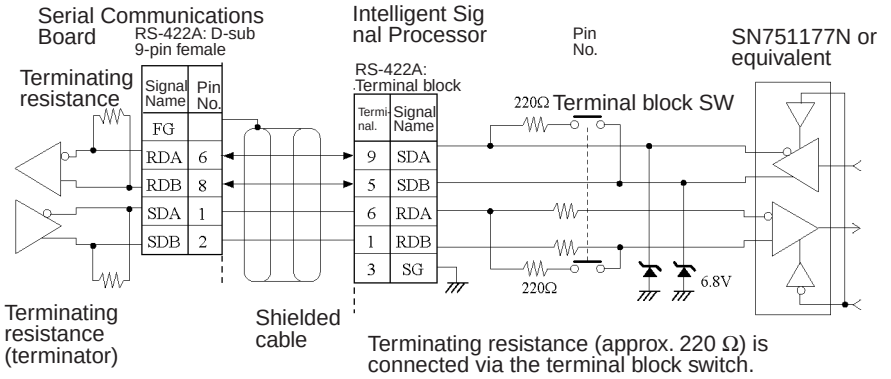

- **RS-485**

Signal name	Abbreviation	Signal direction	Terminal
Inverting output	–	Input or output	19
Non-inverting output	+	Input or output	18

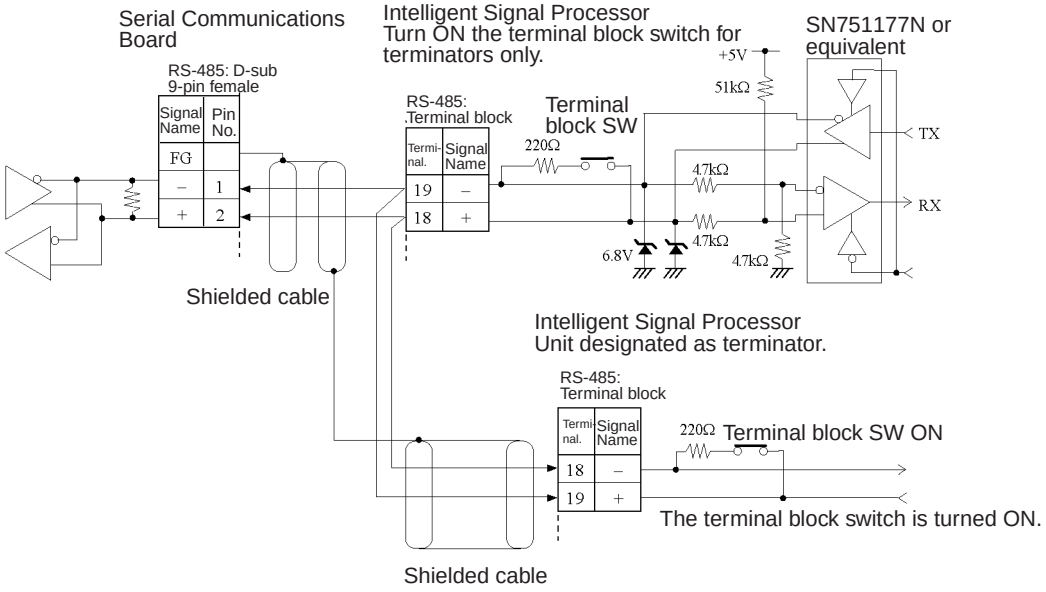

Note 1. The connection configuration is a one-to-one or a 1-to-N configuration. For 1-to-N connections, up to 32 units including the Serial Communications Board can be connected using a 2-wire connection. Using a 4-wire connection, up to 32 units can be connected with only the K3T□.

2. The maximum cable length is 500 m. Use shielded twisted-pair cables (AWG28i or greater).
3. Connect terminating resistance at both ends of the transmission path.
4. Turn the terminal block switch ON at the terminators.
5. Turn the terminal block switches OFF for units that are not terminators.

Reset (by Unit Number) (Sequence No. 300)

This sequence performs the same processing as when an input is received on the reset terminal.

Send Data Word Allocation (2nd Operand of PMCR)

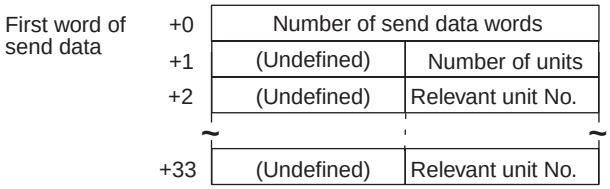

Offset	Contents (data format)	Data
+0	Number of send data words (4 digits BCD)	0003 to 0034
+1	Number of units (2 digits BCD)	00 to 32
+2	Relevant unit No. (2 digits BCD)	00 to 99
	• • •	
+33	Relevant unit No. (2 digits BCD)	00 to 99

Receive Data Word Allocation (3rd Operand of PMCR)

None.

Reset Control (Continuous Units) (Sequence No. 301)

This sequence performs reset control for continuous units.

Send Data Word Allocation (2nd Operand of PMCR)

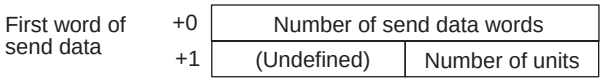

Offset	Contents (data format)	Data
+0	Number of send data words (4 digits BCD)	0002
+1	Number of units (2 digits BCD)	00 to 32

Receive Data Word Allocation (3rd Operand of PMCR)

None.

Write Set Value (by Unit Number) (Sequence No. 302)

This sequence writes each set value (HH, H, L, LL).

Send Data Word Allocation (2nd Operand of PMCR)

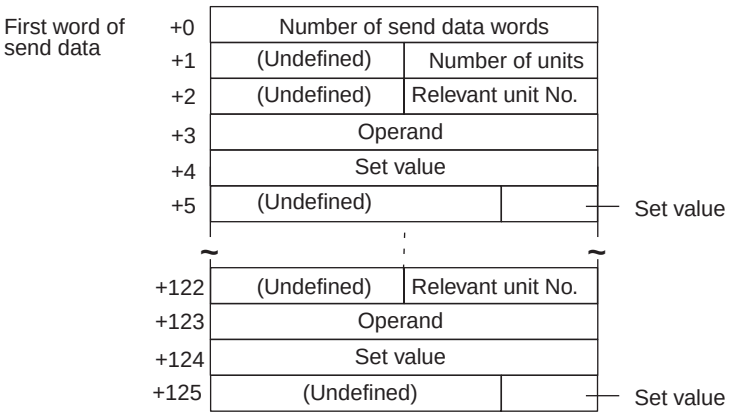

Offset	Contents (data format)	Data
+0	Number of send data words (4 digits BCD)	0006 to 0126
+1	Number of units (2 digits BCD)	01 to 31
+2	Relevant unit No. (2 digits BCD)	00 to 99
+3	Operand (ASCII 2 characters)	4848 (“HH”),4C4C (“LL”) 4820 (“H”),4C20 (“L”)
+4 to +5	Set value (5 digits BCD)	00000 to 99999 Negative sign: F (5th digit BCD) **Example** 12345: +4 = 2345, +5 = 0001 **Example** –1234: +4 = 1234, +5 = 000F
	• • •	
+124 to +125	Set value (5 digits BCD)	Same as above

Receive Data Word Allocation (3rd Operand of PMCR)

None.

Write Set Value HH (Continuous Units) (Sequence No. 303)

This sequence writes set value HH for continuous units.

Send Data Word Allocation (2nd Operand of PMCR)

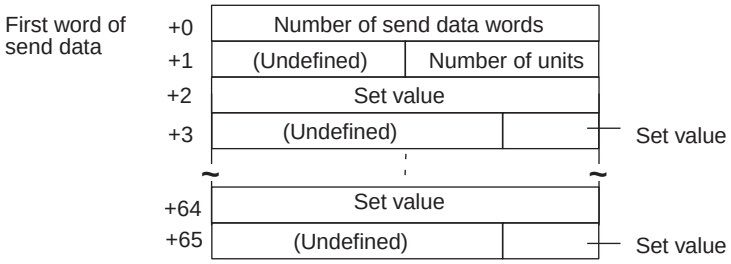

Offset	Contents (data format)	Data
+0	Number of send data words (4 digits BCD)	0004 to 0066
+1	Number of units (2 digits BCD)	01 to 32
+2 to +3	Set value (5 digits BCD)	00000 to 99999 Negative sign: F (5th digit BCD) **Example** 12345: +2 = 2345, +3 = 0001 **Example** –1234: +2 = 1234, +3 = 000F
	• • •	
+64 to +65	Set value (5 digits BCD)	Same as above

Receive Data Word Allocation (3rd Operand of PMCR)

None.

Write Set Value H (Continuous Units) (Sequence No. 304)

This sequence writes set value H for continuous units. The word allocation is identical to that of sequence No. 303 (Write Set Value HH (Continuous Units)).

Write Set Value L (Continuous Units) (Sequence No. 305)

This sequence writes set value L for continuous units. The word allocation is identical to that of sequence No. 303 (Write Set Value HH (Continuous Units)).

Write Set Value LL (Continuous Units) (Sequence No. 306)

This sequence writes set value LL for continuous units. The word allocation is identical to that of sequence No. 303 (Write Set Value HH (Continuous Units)).

Write Set Value with Bank (by Unit Number) (Sequence No. 307)

This sequence writes set value of a bank which is not in use (K3TR: HH to LL, K3TC:O1 to O5).

Send Data Word Allocation (2nd Operand of PMCR)

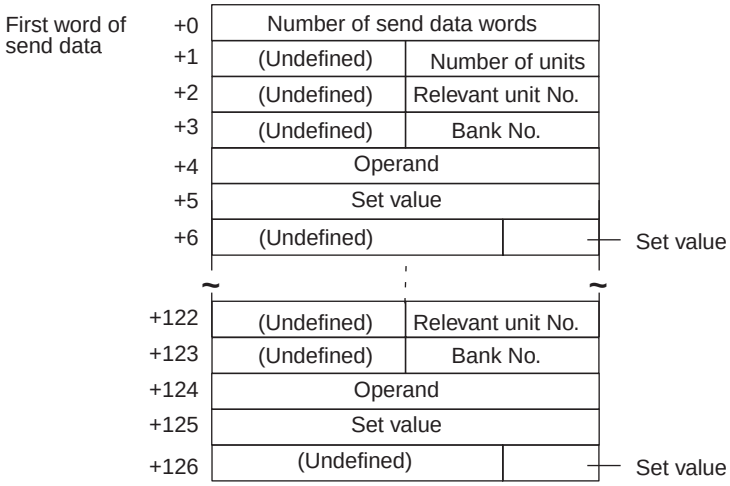

Offset	Contents (data format)	Data
+0	Number of send data words (4 digits BCD)	0007 to 0127
+1	Number of units (2 digits BCD)	01 to 25
+2	Relevant unit No. (2 digits BCD)	00 to 99
+3	Bank No. (2 digits BCD)	01 to 04
+4	Operand (Two ASCII characters)	4848 (“HH”), 4F31 (“O1”) 4820 (“H ”), 4F32 (“O2”) 4C20 (“L ”), 4F33 (“O3”) 4C4C (“LL”), 4F34 (“O4”) 4F35 (“O5”)
+5 to +6	Set value (5 digits BCD)	00000 to 99999 Negative sign: F (5th digit BCD) **Example** 12345: +5 = 2345, +6 = 0001 **Example** –1234: +5 = 1234, +6 = 000F
	• • •	
+125 to +126	Set value (5 digits BCD)	Same as above

Receive Data Word Allocation (3rd Operand of PMCR)

None.

Write Set Value HH with Bank (Continuous Units) (Sequence No. 308)

This sequence writes set value HH of a bank not in use for continuous units.

Send Data Word Allocation (2nd Operand of PMCR)

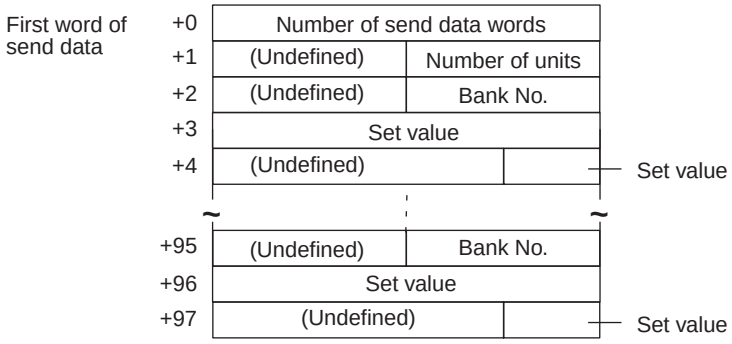

Offset	Contents (data format)	Data
+0	Number of send data words (4 digits BCD)	0004 to 0098
+1	Number of units (2 digits BCD)	01 to 32
+2	Bank No. (2 digits BCD)	01 to 04
+3 to +4	Set value (5 digits BCD)	00000 to 99999 Negative sign: F (5th digit BCD) **Example** 12345: +2 = 2345, +3 = 0001 **Example** –1234: +2 = 1234, +3 = 000F
	• • •	
+96 to +97	Set value (5 digits BCD)	Same as above

Receive Data Word Allocation (3rd Operand of PMCR)

None.

Write Set Value H with Bank (Continuous Units) (Sequence No. 309)

This sequence writes set value H of a bank not in use for continuous units. The word allocation is identical to that of sequence No. 308 (Write Set Value HH with Bank (Continuous Units)).

Write Set Value L with Bank (Continuous Units) (Sequence No. 310)

This sequence writes set value L of a bank not in use for continuous units. The word allocation is identical to that of sequence No. 308 (Write Set Value HH with Bank (Continuous Units)).

Write Set Value LL with Bank (Continuous Units) (Sequence No. 311)

This sequence writes set value LL of a bank not in use for continuous units. The word allocation is identical to that of sequence No. 308 (Write Set Value HH with Bank (Continuous Units)).

Write Set Value O5 with Bank (Continuous Units) (Sequence No. 312)

This sequence writes set value O5 of a bank not in use for continuous units. The word allocation is identical to that of sequence No. 308 (Write Set Value HH with Bank (Continuous Units)).

Write Set Value O4 with Bank (Continuous Units) (Sequence No. 313)

This sequence writes set value O4 of a bank not in use for continuous units. The word allocation is identical to that of sequence No. 308 (Write Set Value HH with Bank (Continuous Units)).

Write Set Value O3 with Bank (Continuous Units) (Sequence No. 314)

This sequence writes set value O3 of a bank not in use for continuous units. The word allocation is identical to that of sequence No. 308 (Write Set Value HH with Bank (Continuous Units)).

Write Set Value O2 with Bank (Continuous Units) (Sequence No. 315)

This sequence writes set value O2 of a bank not in use for continuous units. The word allocation is identical to that of sequence No. 308 (Write Set Value HH with Bank (Continuous Units)).

Write Set Value O1 with Bank (Continuous Units) (Sequence No. 316)

This sequence writes set value O1 of a bank not in use for continuous units. The word allocation is identical to that of sequence No. 308 (Write Set Value HH with Bank (Continuous Units)).

Read Set Value (by Unit Number) (Sequence No. 317)

Reads set value HH, H, L, or LL.

Send Data Word Allocation (2nd Operand of PMCR)

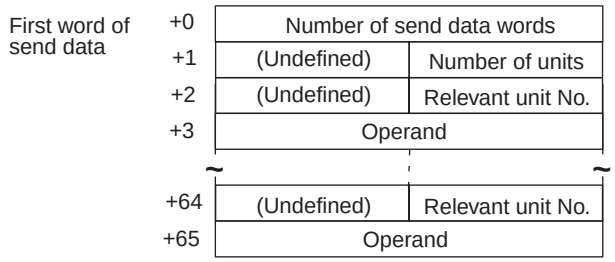

Offset	Contents (data format)	Data
+0	Number of send data words (4 digits BCD)	0004 to 0066
+1	Number of units (2 digits BCD)	01 to 32
+2	Relevant unit No. (2 digits BCD)	00 to 99
+3	Operand (ASCII 2 characters)	4848 (“HH”),4C4C (“LL”)4F31 (“01”) 4820 (“H”),4C20 (“L”)4F35 (“05”)
	• • •	
+64 to +65	Operand (ASCII 2 characters)	Same as above

Receive Data Word Allocation (3rd Operand of PMCR))

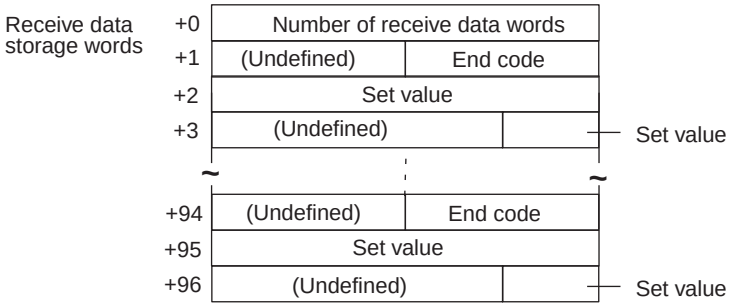

Offset	Contents (data format)	Data
+0	Number of receive data words (4 digits BCD)	0004 to 0097
+1	End code (2 digits Hex)	00 to 22
+2 to +3	Set value (5 digits BCD)	00000 to 99999 Negative sign: F (most significant digit) **Example** 12345: +2 = 2345, +3 = 0001 **Example** –1234: +2 = 1234, +3 = 000F
	• • •	
+95 to +96	Set value (5 digits BCD)	Same as above

Read Set Value HH (Continuous Units) (Sequence No. 318)

This sequence reads set value HH for continuous units.

Send Data Word Allocation (2nd Operand of PMCR)

First word of send data	+0	Number of send data words	
	+1	(Undefined)	Number of units

Offset	Contents (data format)	Data
+0	Number of send data words (4 digits BCD)	0002
+1	Number of units (2 digits BCD)	01 to 32

Receive Data Word Allocation (3rd Operand of PMCR)

This sequence is similar to sequence No. 317 (Read Set Value (by Unit Number)).

Read Set Value H (Continuous Units) (Sequence No. 319)

This sequence reads set value H for continuous units. The word allocation is identical to that of sequence No. 318 (Read Set Value HH (Continuous Units)).

Read Set Value L (Continuous Units) (Sequence No. 320)

This sequence reads set value L for continuous units. The word allocation is identical to that of sequence No. 318 (Read Set Value HH (Continuous Units)).

Read Set Value LL (Continuous Units) (Sequence No. 321)

This sequence reads set value LL for continuous units. The word allocation is identical to that of sequence No. 318 (Read Set Value HH (Continuous Units)).

Read Set Value with Bank (by Unit Number) (Sequence No. 322)

Reads the set value of a bank which is not in use (K3TR: HH to LL, K3TC:01 to 05) and stores the results in the specified words.

Send Data Word Allocation (2nd Operand of PMCR)

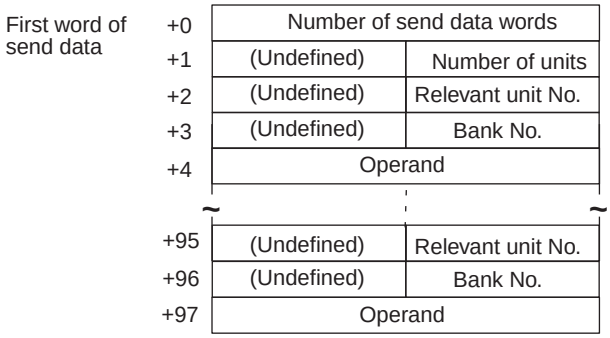

Offset	Contents (data format)	Data
+0	Number of send data words (4 digits BCD)	0005 to 0098
+1	Number of units (2 digits BCD)	01 to 32
+2	Relevant unit No. (2 digits BCD)	00 to 99
+3	Bank No. (2 digits BCD)	01 to 04
+4	Operand (ASCII 2 characters)	4848 (“HH”), 4820 (“H ”), 4C20 (“L ”), 4C4C (“LL”), 4F35 (“O5”), 4F31 (“O1”), 4F32 (“O2”), 4F33 (“O3”), 4F34 (“O4”)
	• • •	
+ 97	Operand (ASCII 2 characters)	Same as above

Receive Data Word Allocation (3rd Operand of PMCR)

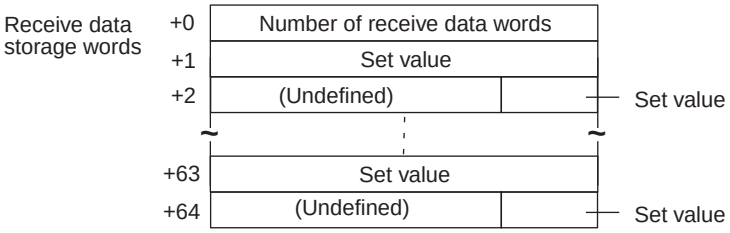

Offset	Contents (data format)	Data
+0	Number of receive data words (4 digits BCD)	0003 to 0065
+1 to +2	Set value (5 digits BCD)	00000 to 99999 Negative sign: F (5th digit BCD) **Example** 12345: +1 = 2345, +2 = 0001 **Example** –1234: +1 = 1234, +2 = 000F
	• • •	
+63 to +64	Set value (5 digits BCD)	Same as above

Read Set Value HH with Bank (Continuous Units) (Sequence No. 323)

This sequence reads set value HH of a bank not in use for continuous units.

Send Data Word Allocation (2nd Operand of PMCR)

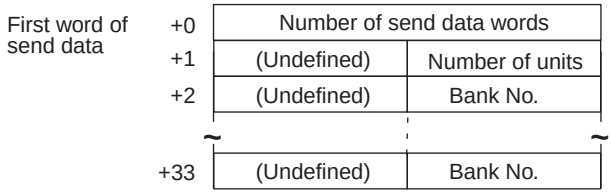

Offset	Contents (data format)	Data
+0	Number of send data words (4 digits BCD)	0003 to 0034
+1	Number of units (2 digits BCD)	01 to 32
+2	Bank No. (2 digits BCD)	01 to 04
	• • •	
+ 33	Bank No. (2 digits BCD)	Same as above

Receive Data Word Allocation (3rd Operand of PMCR)

The word allocation is similar to sequence No. 322 (Read Set Value with Bank (by Unit Number)).

Read Set Value H with Bank (Continuous Units) (Sequence No. 324)

This sequence reads set value H of a bank not in use for continuous units. The word allocation is identical to that of sequence No. 323 (Read Set Value HH with Bank (Continuous Units)).

Read Set Value L with Bank (Continuous Units) (Sequence No. 325)

This sequence reads set value L of a bank not in use for continuous units. The word allocation is identical to that of sequence No. 323 (Read Set Value HH with Bank (Continuous Units)).

Read Set Value LL with Bank (Continuous Units) (Sequence No. 326)

This sequence reads set value LL of a bank not in use for continuous units. The word allocation is identical to that of sequence No. 323 (Read Set Value HH with Bank (Continuous Units)).

Read Set Value O5 with Bank (Continuous Units) (Sequence No. 327)

This sequence reads set value O5 of a bank not in use for continuous units. The word allocation is identical to that of sequence No. 323 (Read Set Value HH with Bank (Continuous Units)).

Read Set Value O4 with Bank (Continuous Units) (Sequence No. 328)

This sequence reads set value O4 of a bank not in use for continuous units. The word allocation is identical to that of sequence No. 323 (Read Set Value HH with Bank (Continuous Units)).

Read Set Value O3 with Bank (Continuous Units) (Sequence No. 329)

This sequence reads set value O3 of a bank not in use for continuous units. The word allocation is identical to that of sequence No. 323 (Read Set Value HH with Bank (Continuous Units)).

Read Set Value O2 with Bank (Continuous Units) (Sequence No. 330)

This sequence reads set value O2 of a bank not in use for continuous units. The word allocation is identical to that of sequence No. 323 (Read Set Value HH with Bank (Continuous Units)).

Read Set Value O1 with Bank (Continuous Units) (Sequence No. 331)

This sequence reads set value O1 of a bank not in use for continuous units. The word allocation is identical to that of sequence No. 323 (Read Set Value HH with Bank (Continuous Units)).

Read Holding Data (Sequence No. 332)

Reads the peak/bottom data (maximum, minimum) and stores the results in the specified words.

Send Data Word Allocation (2nd Operand of PMCR)

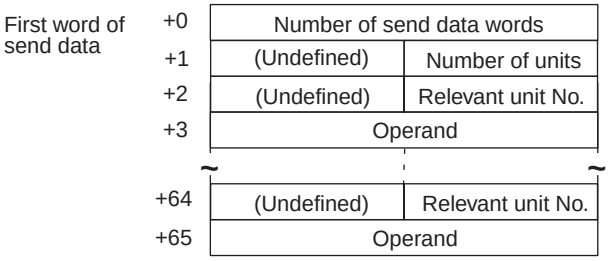

Offset	Contents (data format)	Data
+0	Number of send data words (4 digits BCD)	0004 to 0066
+1	Number of units (2 digits BCD)	01 to 32
+2	Relevant unit No. (2 digits BCD)	00 to 99
+3	Operand (ASCII 2 characters)	5048 (“PH”) 4248 (“BH”)
	• • •	
+65	Operand (ASCII 2 characters)	Same as above

Receive Data Word Allocation (3rd Operand of PMCR)

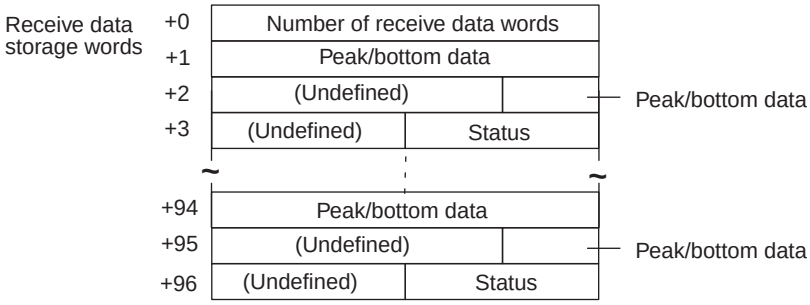

Offset	Contents (data format)	Data
+0	Number of receive data words (4 digits BCD)	0004 to 0097
+1 to +2	Peak/bottom data (5 digits BCD)	00000 to 99999 Negative sign: F (5th digit BCD) **Example** 12345: +1 2345, +2 0001 **Example** –1234: +1 1234, +2 000F
+3	Status (2 digits Hex)	d0 bit: If overflow: 1 Others: 0
		d1 bit: If underflow: 1 Others: 0
		d2 bit: Not used
		d3 bit: During forced zero operation: 1 Others: 0 (K3TH,K3TR: 0)
		d4 bit: Not used
		d5 bit: During hold input: 1 Others: 0
		d6 bit: Bank input 1: 1 Others: 0 (K3TH, K3TX: 0)
		d7 bit: Bank input 2: 1 Others: 0 (K3TH, K3TX: 0)
	• • •	
+96	Status	Same as above

Read Holding Data PH (Continuous Units) (Sequence No. 333)

This sequence reads peak holding data for continuous units.

Send Data Word Allocation (2nd Operand of PMCR)

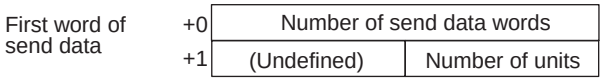

Offset	Contents (data format)	Data
+0	Number of send data words (4 digits BCD)	0002
+1	Number of units (2 digits BCD)	01 to 32

Receive Data Word Allocation (3rd Operand of PMCR)

The data allocation is similar to sequence No. 332 (Read Holding Data (by Unit Number)).

Read Holding Data BH (Continuous Units) (Sequence No. 334)

This sequence reads bottom holding data for continuous units. The word allocation is identical to that of sequence No. 333 (Read Holding Data PH (Continuous Units)).

Read Display Value (PV) (by Unit Number) (Sequence No. 335)

Reads the display value (PV) and stores the results in the specified words.

Send Data Word Allocation (2nd Operand of PMCR)

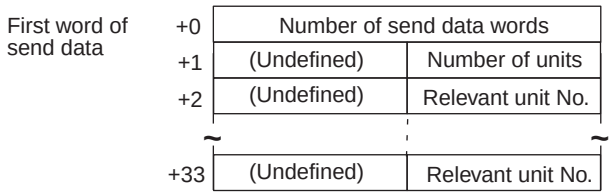

Offset	Contents (data format)	Data
+0	Number of send data words (4 digits BCD)	0003 to 0034
+1	Number of units (2 digits BCD)	01 to 32
+2	Relevant unit No. (2 digits BCD)	00 to 99
	• • •	
+ 33	Relevant unit No. (2 digits BCD)	00 to 99

Receive Data Word Allocation (3rd Operand of PMCR)

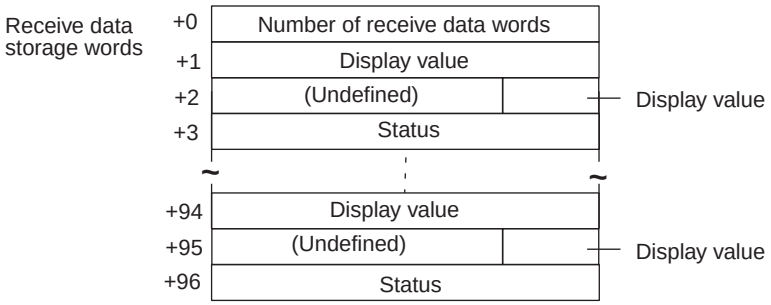

Offset	Contents (data format)	Data
+0	Number of receive data words (4 digits BCD)	0004 to 0097
+1 to +2	Display value (5 digits BCD)	00000 to 99999 Negative sign: F (5th digit BCD) **Example** 12345 +1 2345 +2 0001 **Example** –1234 +1 1234 +2 000F
+3	Status (4 digits Hex)	d0 bit: If overflow: 1 Others: 0
		d1 bit: If underflow: 1 Others: 0
		d2 bit: Not used
		d3 bit: During forced zero operation: 1 Others: 0 (K3TH, K3TR, K3TC: 0)
		d4 bit: In test mode: 1 Others: 0
		d5 bit: While holding input: 1 Others: 0
		d6 bit: Bank input 1: 1 Others: 0 (K3TH, K3TX: 0)
		d7 bit: Bank input 2: 1 Others: 0 (K3TH, K3TX: 0)
		d8 bit: LL comparison output: 1 Others: 0 OUT1 comparison output: 1 (K3TC)
		d9 bit: L comparison output: 1 Others: 0 OUT2 comparison output: 1 (K3TC)
		d10 bit: H comparison output: 1 Others: 0 OUT4 comparison output: 1 (K3TC)
		d11 bit: HH comparison output: 1 Others: 0 OUT5 comparison output: 1 (K3TC)
		d12 bit: PASS comparison output: 1 Others: 0 OUT3 comparison output: 1 (K3TC)
		d13 bit: Not used d14 bit: Not used d15 bit: Not used
	• • •	
+96	Status (4 digits BIN)	Same as above

Read Display Value (PV) (Continuous Units) (Sequence No. 336)

This sequence reads display value (PV) for continuous units.

Send Data Word Allocation (2nd Operand of PMCR)

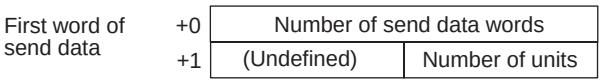

Offset	Contents (data format)	Data
+0	Number of send data words (4 digits BCD)	0002
+1	Number of units (2 digits BCD)	01 to 32

Receive Data Word Allocation (3rd Operand of PMCR)

This sequence is similar to sequence No. 335 (Read Display Value (PV) (Continuous Units)).

Model Data Read (by Unit Number) (Sequence No. 337)

Reads model data and stores the results in the specified words.

Send Data Word Allocation (2nd Operand of PMCR)

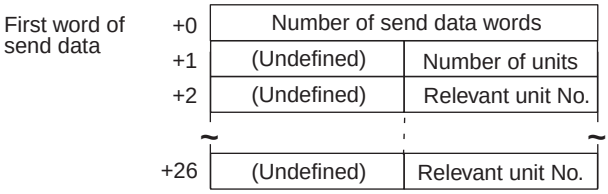

Offset	Contents (data format)	Data
+0	Number of send data words (4 digits BCD)	0003 to 0027
+1	Number of units (2 digits BCD)	01 to 25
+2	Relevant unit No. (2 digits BCD)	00 to 99
	• • •	
+ 26	Relevant unit No. (2 digits BCD)	Same as above

Note The number of Units can be up to 25 maximum.

Receive Data Word Allocation (3rd Operand of PMCR)

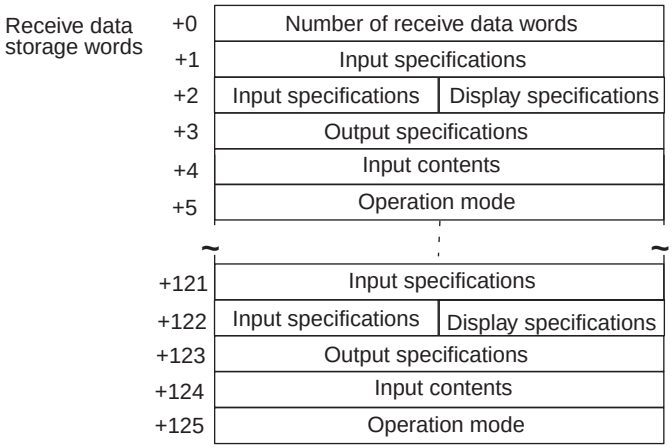

Offset	Contents (data format)	Data
+0	Number of receive data words (4 digits BCD)	0006 to 0126
+1 to + 2	Input specifications (ASCII 3 characters)	544131 (“TA1”) (K3TH) 544231 (“TB1”) (K3TH) 564432 (“VD2”) (K3TX) 414432 (“AD2”) (K3TX) 564132 (“VA2”) (K3TX) 414132 (“AA2”) (K3TX) 524231 (“RB1”) (K3TR, K3TC)
+2	Display specifications (ASCII 1 character)	41 (“A”) (common) 42 (“B”) (K3TH, K3TX) 43 (“C”) (K3TR, K3TC)
+3	Output specifications (ASCII 2 characters)	5331 (“S1”) (RS-232C) 5332 (“S2”) (RS-485) 5333 (“S3”) (RS-422A) 5335 (“S5”) (RS-485 + comparison output) 5336 (“S6”) (RS-422A + comparison output)
+4	Input contents (ASCII 2 characters)	Leftmost digit: 30 (“0”) to 31 (“1”)
		Rightmost digit: 31 (“1”) to 45 (“E”)
+5	Operation mode (ASCII 2 characters)	3030 (“00”) (K3TH, K3TX) 3031 (“00”) to 3133 (“12”) (K3TR) 5542 (“UB”) (K3TC) 5543 (“UC”) (K3TC)
	• • •	
+125	Operation mode (ASCII 2 characters)	Same as above

Model Data Read (Continuous Units) (Sequence No. 338)

This sequence reads model data for continuous units.

Send Data Word Allocation (2nd Operand of PMCR)

First word of send data

+0	Number of send data words	
+1	(Undefined)	Number of units

Offset	Contents (data format)	Data
+0	Number of send data words (4 digits BCD)	0002
+1	Number of units (2 digits BCD)	01 to 25

Note The number of Units can be up to 25 maximum.

Receive Data Word Allocation (3rd Operand of PMCR)

The work allocation is similar to sequence No. 337 (Model Data Read (by Unit Number)).

General-purpose Command (Sequence No. 339)

Sends the specified data and writes the receive data to the receive data words. The characters such as “@”, FCS, terminators need not be set in the send and receive data words. These characters will be automatically added for transmission and automatically removed before saving data.

Send Data Word Allocation (2nd Operand of PMCR)

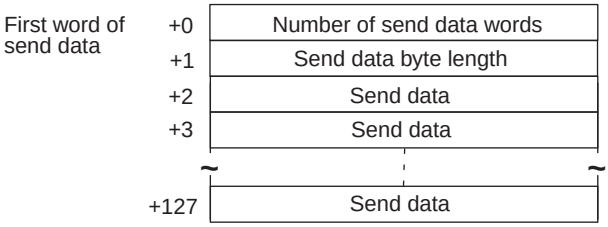

Offset	Contents (data format)	Data
+0	Number of send data words (4 digits BCD)	0003 to 0128
+1	Send data byte length (4 digits BCD)	0001 to 0251 Number of bytes of send data not including @, the FCS, and the terminator.
+2 to +127	Send data (ASCII)	ASCII code Send data: 251 characters max.

Receive Data Word Allocation (3rd Operand of PMCR)

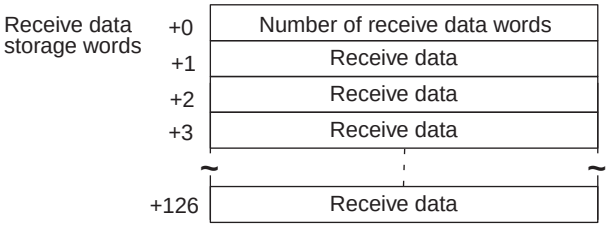

Offset	Contents (data format)	Data
+0	Number of receive data words (4 digits BCD)	0001 to 0127
+1 to +126	Receive data (ASCII)	ASCII code Receive data: 251 characters max.

Appendix J

V500/V520 Bar Code Reader Protocol

The V500/V520 Bar Code Reader Protocol is used to make various settings or control remotely the Bar Code Reader connected the Serial Communications Board via RS-232C cable.

Protocol Configuration

The configuration of the V500/V520 Bar Code Reader Protocol is shown below.

Sequence No.	Communications sequence name	Function	Ladder interface	
			Send word allocation	Receive word allocation
350	BCR read start	Instructs the Reader to start a BCR read.	No	No
351	BCR read stop	Instructs the Reader to stop a BCR read.	No	No
352	Data read	Data read by the Reader is received and saved in the receive words.	No	Yes
353	Complete data read	Instructs the Reader to start a read. After the data read by the Reader is received and saved to the receive words, reading is stopped.	No	Yes
354	BCR function write (V500)	Writes the operation mode and read functions.	Yes	No
355	BCR function read (V500)	Reads the operation mode and read functions.	No	Yes
356	Log data output request (V500)	Requests output of log data sent to host.	Yes	Yes
357	Preset data set (V500)	Writes preset data.	Yes	No
358	BCR connection confirmation (V500)	Confirms if the Reader is correctly set.	No	No
359	Log data clear (V500)	Clear log data.	No	No
360	Continuous data read (scan) (V500)	Performs the following operations repeatedly: starts reading, receives data read by the Reader, saves the data to the receive words by the scan method.	No	Yes
361	Continuous data read (interrupt) (V500)	Performs the following operations repeatedly: starts reading, receives data read by the Reader, saves the data to the receive words by the interrupt method (interrupt No.100).	No	Yes
362	BCR initialize	Clears the log, confirms BCR connection, and sets BCRs.	Yes	No
363	Continuous data read (scan) (V520)	Performs the following operations repeatedly: starts reading, receives data read by the Reader, saves the data to the receive words by the scan method.	No	Yes
364	Continuous data read (interrupt) (V520)	Performing the following operations repeatedly: starts reading, receives data read by the Reader, saves the data to the receive words by the interrupt method (interrupt No.100).	No	Yes
365	General-purpose command 1	Used to send data of a specified data length, and receive only ACK as the receive data.	Yes	No
366	General-purpose command 2	Used to send data of a specified data length, and receive ACK together with the return of other receive data. The frame format of the receive data, however, has to contain STX and ETX.	Yes	Yes

Note Ladder Interface Settings

YES: User settings are required for the 2nd and 3rd operands of PMCR.

NO: Send word allocation: Set a dummy word address for the 3rd operand (D).
Receive word allocation: Set the constant 0000 for the 2rd operand (S).

Connections

The connections for using the V500/V520 Bar Code Reader Protocol are shown below.

V500 Connections

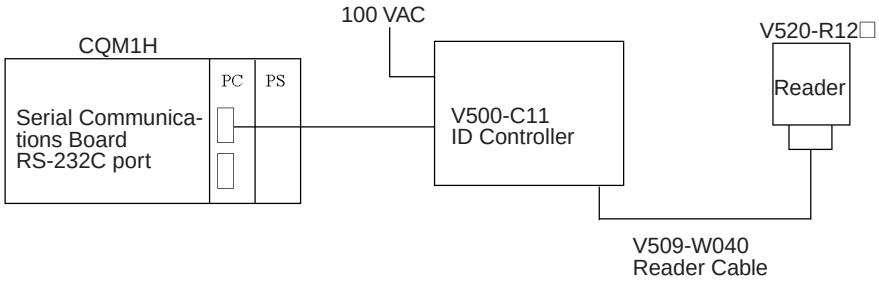

Serial Communications Board:
D-sub 9 pin female

Signal Name	Pin No.
FG	1
SD	2
RD	3
RS	4
CS	5
DR	7
ER	8
SG	9

V500-C11:
D-sub 9 pin female

Pin No.	Signal Name
1	FG
2	SD
3	RD
4	RS
5	CS
7	DR
8	ER
9	SG

V520 Connections

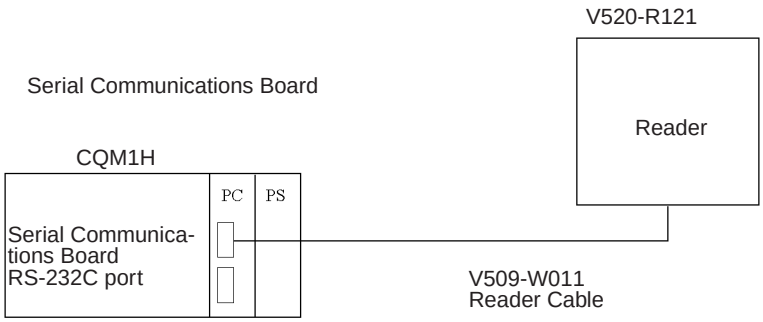

Serial Communications Board:
D-sub 9 pin female

Signal Name	Pin No.
FG	1
SD	2
RD	3
RS	4
CS	5
DR	7
ER	8
SG	9

V520-R121:
D-sub 9 pin female

Pin No.	Signal Name
1	SD
2	RD
3	RS
4	CS
6	ER
7	SG

System Setting

Shown below are the system settings of the V500-C11 and V520-R121 when this protocol is used.

Note The portions enclosed by in boxes are used for this protocol.

V500-C11

- **BCR Functions**

Read trigger	"READ SIGNAL INPUT", "ONLINE READ COMMAND"
Read control method	"SINGLE READ", "CONTINUOUS READ"

- **Host Interface**

Prefix	NONE, "STX"
Suffix	"ETX", "CR "
Bar code output	"OUTPUT", "NO OUTPUT"

V520-R121

Start code	NONE, "STX"
Stop code	"ETX", "CR"
Operation mode	External trigger, host trigger
Data output mode	1-shot, continuous

BCR Read Start (Sequence No. 350)

This sequence instructs the Bar Code Reader to start reading.

Send Data Word Allocation (2nd Operand of PMCR)
None.

Receive Data Word Allocation (3rd Operand of PMCR)
None.

BCR Read Stop (Sequence No. 351)

This sequence instructs the Bar Code Reader to stop reading.

Send Data Word Allocation (2nd Operand of PMCR)
None.

Receive Data Word Allocation (3rd Operand of PMCR)
None.

Data Read (Sequence No. 352)

This sequence receives read data and saves it to the receive data storage words.

Send Data Word Allocation (2nd Operand of PMCR)

None.

Receive Data Word Allocation (3rd Operand of PMCR)

Receive data storage words		
	+0	Number of receive data words
	+1	Read data
	+2	Read data
	+3	Read data
	+4	Read data
	~	~
	+15	Read data
	+16	Read data

Offset	Contents (data format)	Data
+0	Number of receive data words (4 digits BCD)	0002 to 0017
+1 to +16	Read data (ASCII)	30 (‘0’) to 39 (‘9’), 41 (‘A’) to 5A (‘Z’), 3F (‘?’) Up to 32 characters in ASCII

Note The reception wait time is not set for this sequence.

Complete Data Read (Sequence No. 353)

This sequence instructs the Bar Code Reader to start reading, receives the data read by the Bar Code Reader, stores the data in the receive data storage words, and then instructs the Reader to stop reading.

Send Data Word Allocation (2nd Operand of PMCR)

None.

Receive Data Word Allocation (3rd Operand of PMCR)

It is similar to sequence No. 352 (Data read).

Note The reception wait time is not set for this sequence.

BCR Function Write (V500) (Sequence No. 354)

This sequence sets the operation mode and read functions in the Bar Code Reader.

Send Data Word Allocation (2nd Operand of PMCR)

First word of send data				
	+0	Number of send data words		
	+1	Operation mode	In-zone control	
	+2	Types of bar code	(Undefined)	
	+3	(Undefined)	Number of digits	
	+4	Modulus check	(Undefined)	
	+5	(Undefined)	Number of matches	Multistep labels
	+6	Buzzer	Horizontal control	

Offset	Contents (data format)	Data
+0	Number of send data words (4 digits BCD)	0007 (fixed)
+1	Operation mode (ASCII 1 character)	41 (‘A’): ONLINE *42 (‘B’): ONLINE CONTROL
	In-zone control (ASCII 1 character)	*41 (‘A’): ON 42 (‘B’): OFF
+2	Bar code type (ASCII 1 character)	41 (‘A’): JAN 42 (‘B’): NW7 NORMAL 43 (‘C’): NW7 SMALL 44 (‘D’): NW7 HEX 45 (‘E’): CODE39 NORMAL 46 (‘F’): CODE39 ST/SP OUTPUT 47 (‘G’): 2 of 5 (ITF) 48 (‘H’): CODE128 49 (‘I’): CODE93 4A (‘J’): 2 of 5 (3BAR) 4B (‘K’): 2 of 5 (5BAR)
+3	Number of digits (2 digits BCD)	00 to 32 00: Any number of digits allowed.
+4	Modulus check (ASCII 1 character)	41 (‘A’): No-check 42 (‘B’): Modulus 10 (all bar codes) 43 (‘C’): Modulus 11 (except JAN) 44 (‘D’): Modulus 16 (NW7 only) 45 (‘E’): Modulus 43 (CODE39 only) 46 (‘F’): Modulus 47 (CODE93 only) 47 (‘G’): Modulus 103 (CODE128 only)
+5	Number of matches (1 digit BCD)	1 to 5
	Multistep labels (1 digit BCD)	1 to 4
+6	Buzzer (ASCII 1 character)	41 (‘A’): ON for normal read 42 (‘B’): ON for no-read 43 (‘C’): OFF
	Horizontal control mode (ASCII 1 character)	41 (‘A’): Normal (continuous rotating) 42 (‘B’): In-zone startup

Note Selecting the values marked with asterisks is required for this protocol.

Receive Data Word Allocation (3rd Operand of PMCR)

None.

BCR Function Read (V500) (Sequence No. 355)

This sequence reads the settings of functions in the Bar Code Reader.

Send Data Word Allocation (2nd Operand of PMCR)

None.

Receive Data Word Allocation (3rd Operand of PMCR)

Receive data storage words				
+0	Number of receive data words			
+1	Operation mode	In-zone control		
+2	Types of bar code	(Undefined)		
+3	(Undefined)	Number of digits		
+4	Modulus check	(Undefined)		
+5	(Undefined)	Number of matches.	Multistep labels.	
+6	Buzzer	Horizontal control		

Offset	Contents (data format)	Data
+0	Number of receive data words (4 digits BCD)	0007 (fixed)
+1	Operation mode (ASCII 1 character)	41 (‘A’): ONLINE 42 (‘B’): ONLINE CONTROL
	In-zone control (ASCII 1 character)	41 (‘A’): ON 42 (‘B’): OFF
+2	Bar code type (ASCII 1 character)	41 (‘A’): JAN 42 (‘B’): NW7 NORMAL 43 (‘C’): NW7 SMALL 44 (‘D’): NW7 HEX 45 (‘E’): CODE39 NORMAL 46 (‘F’): CODE39 ST/SP Output 47 (‘G’): 2 of 5 (ITF) 48 (‘H’): CODE128 49 (‘I’): CODE93 4A (‘J’): 2 of 5 (3BAR) 4B (‘K’): 2 of 5 (5BAR)
+3	Number of digits (2 digits BCD)	00 to 32
+4	Modulus check (ASCII 1 character)	41 (‘A’): No-check 42 (‘B’): Modulus 10 (all bar codes) 43 (‘C’): Modulus 11 (except JAN) 44 (‘D’): Modulus 16 (NW7 only) 45 (‘E’): Modulus 43 (CODE39 only) 46 (‘F’): Modulus 47 (CODE93 only) 47 (‘G’): Modulus 103 (CODE128 only)
+5	Number of matches (1 digit BCD)	1 to 5
	Multistep labels (1 digit BCD)	1 to 4
+6	Buzzer (ASCII 1 character)	41 (‘A’): ON for normal read 42 (‘B’): ON for no-read 43 (‘C’): OFF
	Horizontal control mode (ASCII 1 character)	41 (‘A’): Normal (continuous rotating) 42 (‘B’): In-zone startup

Log Data Output Request (V500) (Sequence No. 356)

This sequence requests output of the log data sent to host.

Send Data Word Allocation (2nd Operand of PMCR)

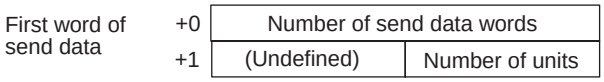

Offset	Contents (data format)	Data
+0	Number of send data words (4 digits BCD)	0002 (fixed)
+1	Number of units (2 digits BCD)	01 to 99

Receive Data Word Allocation (3rd Operand of PMCR)

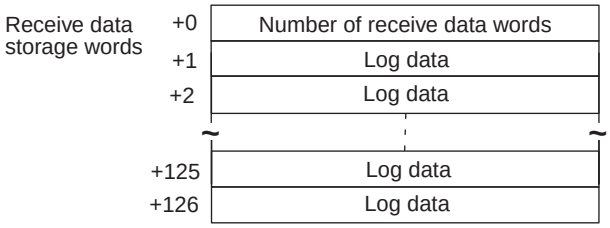

Offset	Contents (data format)	Data
+0	Number of receive data words (4 digits BCD)	0001 to 0127
+1 to +126	Log data (ASCII)	Log data with the number of designated data is stored including the separator GS (1D). If the log data (including separator) exceeds 251 bytes, only 251 bytes are stored.

Note No retries are performed for this sequence.

Preset Data Set (V500) (Sequence No. 357)

This sequence sets preset data.

Send Data Word Allocation (2nd Operand of PMCR)

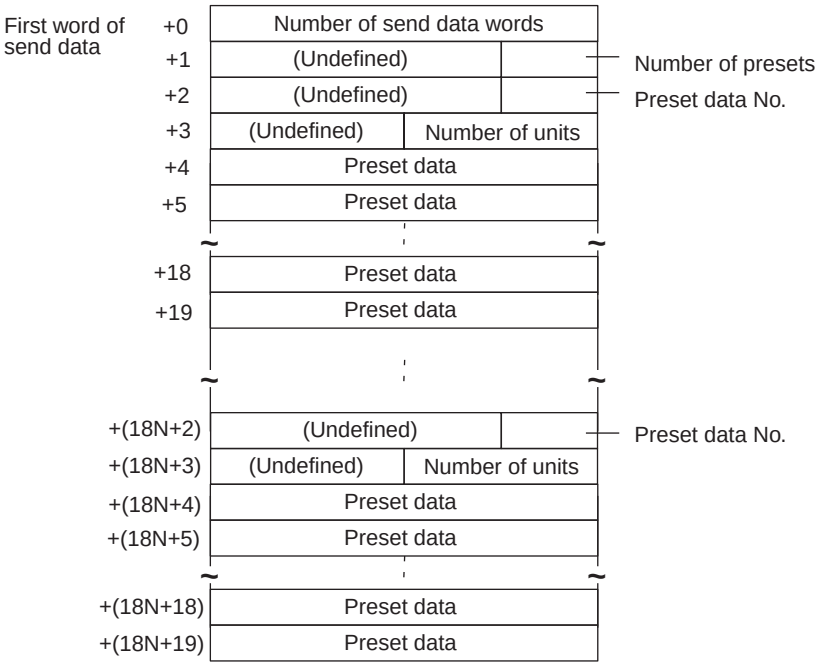

Offset	Contents (data format)	Data
+0	Number of send data words (4 digits BCD)	18N+2 (N is number of presets 1 to 5)
+1	Number of presets (1 digit BCD)	1 to 5
+2	Preset data No. (1 digit BCD)	1 to 5
+3	Data length (2 digits BCD)	01 to 32
+4 to +19	Preset data (ASCII)	Combination of the following ASCII characters and up to 32 characters maximum: 30 (’0’) to 39 (’9’) 41 (’A’) to 5A (’Z’), 3F (’?’) The area that is not used is undefined
+20 to +91		Store repeatedly the contents of words with offsets +2 to +19 the same number of times as the number of presets (N)

Receive Data Word Allocation (3rd Operand of PMCR)

None.

BCR Connection Confirmation (V500) (Sequence No. 358)

This sequence confirms whether the Bar Code Reader is connected correctly or not.

Send Data Word Allocation (2nd Operand of PMCR)

None.

Receive Data Word Allocation (3rd Operand of PMCR)

None.

Log Data Clear (V500) (Sequence No. 359)

This sequence clears the log data.

Send Data Word Allocation (2nd Operand of PMCR)
None.

Receive Data Word Allocation (3rd Operand of PMCR)
None.

Data Continuous Read (Scan) (V500) (Sequence No. 360)

This sequence performs the following operations repeatedly: Instructs the Bar Code Reader to start reading and receives the data read by the Bar Code Reader. The scan notification method is used for the receive data.

Send Data Word Allocation (2nd Operand of PMCR)
None.

Receive Data Word Allocation (3rd Operand of PMCR)
Receive data word allocation is similar to that of sequence No. 352 (Data read).

Note 1. Since this sequence repeats itself within the sequence, once it is executed, it remains in the execution state until cancelled.
2. Even if execution is cancelled, the Bar Code Reader still keeps reading. Execute sequence No. 351 (BCR read stop) to end the sequence.

Note The reception wait time is not set for this sequence.

Data Continuous Read (Interrupt) (V500) (Sequence No. 361)

This sequence performs the following operations repeatedly: Instruct the Bar Code Reader to start reading and receives the data read by the Bar Code Reader. The interrupt notification method is used for the receive data and the interrupt No. is 100.

Send Data Word Allocation (2nd Operand of PMCR)
None.

Receive Data Word Allocation (3rd Operand of PMCR)
The receive data word allocation similar to that of sequence No. 352 (data read).

Note 1. Since this sequence repeats itself within the sequence, once it is executed, it remains in the execution state until cancelled.
2. Even if execution is cancelled, the Bar Code Reader keeps reading. Execute sequence No. 351 (BCR read stop) to end the sequence.

Note The reception wait time is not set for this sequence.

BCR Initialize (V500) (Sequence No. 362)

This sequence clears the log data, confirms BCR connection and sets the BCR functions.

Send Data Word Allocation (2nd Operand of PMCR)
The send data word allocation is similar to that of sequence No. 354 (BCR Function Set).

Receive Data Word Allocation (3rd Operand of PMCR)
None.

Data Continuous Read (Scan) (V520) (Sequence No. 363)

This sequence performs the following operations repeatedly: instructs the Bar Code Reader to start reading and receives the data read by the Bar Code Reader. The scan notification method is used for the receive data.

Send Data Word Allocation (2nd Operand of PMCR)
None.

Receive Data Word Allocation (3rd Operand of PMCR)

The receive data word allocation is similar to that of sequence No. 352 (Data Read).

Note 1. Since this sequence repeats itself within the sequence, once it is executed, it remains in the execution state until cancelled.
2. Even if execution is cancelled, the bar code still keeps reading. Execute sequence No. 351 (BCR Read Stop) to end the sequence.
3. The reception wait time is not set for this sequence.

Data Continuous Read (Interrupt) (V520) (Sequence No. 364)

This sequence performs the following operations repeatedly: Instructs the Bar Code Reader to start reading and receives the data read by the Bar Code Reader. The interrupt notification method is used for the receive data and the interrupt No. is 100.

Send Data Word Allocation (2nd Operand of PMCR)

None.

Receive Data Word Allocation (3rd Operand of PMCR)

The send data word allocation is similar to that of sequence No. 352 (Data Read).

Note 1. Since this sequence repeats itself within the sequence, once it is executed, it remains in the execution state until cancelled.
2. Even if execution is cancelled, the bar code still keeps reading. Execute sequence No. 351 (BCR Read Stop) to end the sequence.
3. The reception wait time is not set for this sequence.

General-purpose Command 1 (Sequence No. 365)

This general-purpose command is used to send data with a specified data length, and receive back only ACK. STX and ETX are automatically attached to the send data.

Send Data Word Allocation (2nd Operand of PMCR)

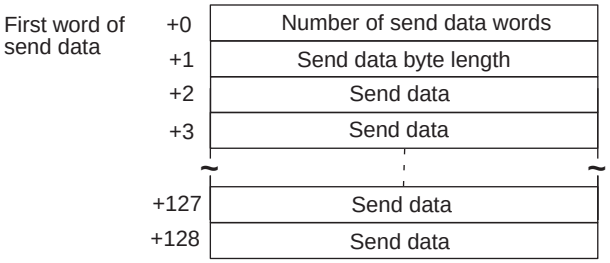

Offset	Contents (data format)	Data
+0	Number of send data words (4 digits BCD)	0003 to 0129
+1	Send data byte length (4 digits BCD)	0001 to 0254 The byte length of the send data excluding STX and ETX.
+2 to +128	Send data (ASCII)	Inscribe send data up to 254 bytes (max.) by ASCII.

Receive Data Word Allocation (3rd Operand of PMCR)

None.

General-purpose Command 2 (Sequence No. 366)

This general-purpose command is used to send data with a specified data length, and receive back ACK in addition to other receive data. The frame format of the receive data, however, has to contain STX and ETX. STX and ETX are automatically attached to the send data.

Send Data Word Allocation (2nd Operand of PMCR)

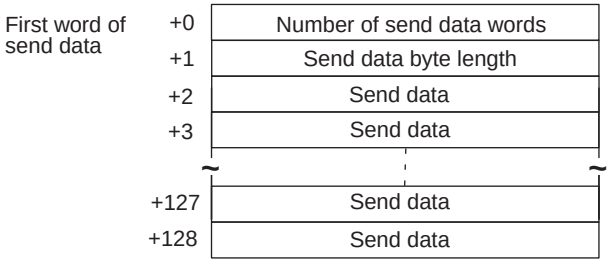

Offset	Contents (data format)	Data
+0	Number of send data words (4 digits BCD)	0003 to 0129
+1	Send data byte length (3 digits BCD)	1 to 254 The byte length of the send data excluding STX and ETX.
+2 to +128	Send data (ASCII)	Set send data up to 254 bytes (max.) by ASCII.

Receive Data Storage Word Allocation (3rd Operand of PMCR)

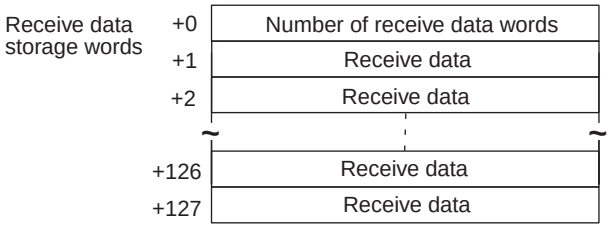

Offset	Contents (data format)	Data
+0	Number of receive data words (4 digits BCD)	0001 to 0128
+1 to +127	Receive data (ASCII)	If the receive data exceed 253 bytes, only 253 bytes are stored.

Note Shown below is the receive data frame format. The reception data without ACK, STX, and ETX is stored.

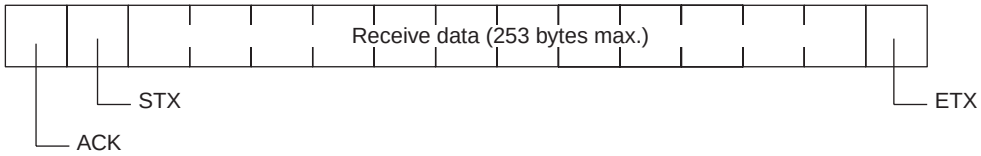

Appendix K

3Z4L Laser Micrometer Protocol

The 3Z4L Laser Micrometer Protocol is used to make various settings or control remotely the Laser Micrometer connected to the Serial Communications Board via RS-232C cable.

Protocol Configuration

The configuration of the 3Z4L Laser Micrometer Protocol is shown below.

Sequence No.	Communications sequence name	Function	Ladder interface	
			Send word allocation	Receive word allocation
400	3Z4L clear	Resets errors, data, analog output, decision result and places the Laser Micrometer into standby.	No	No
401	Memory switch set	Sets memory switches and the area for the work position LED.	Yes	No
402	mm unit set	Sets the display unit to mm.	No	No
403	E unit set	Sets the display unit to E.	No	No
404	Calibration set	Calibrates the Laser Micrometer. Calibration setting release.	Yes	No
405	Calibration release	Releases the calibration of the Laser Micrometer.	No	No
406	Program number set (3000-series)	Switches the program number to a specified number.	Yes	No
407	Measurement condition set (3000-series)	Sets measurement conditions.	Yes	No
408	Measurement condition release (3000-series)	Releases measurement conditions that have been set.	Yes	No
409	Measurement condition list request (3000-series)	Requests the measurement conditions that have been set and other settings.	No	Yes
410	Single run measurement start (3000-series)	When the sample measurement condition is from 1 to 999, performs a single run measurement and requests the measurement results.	No	Yes
411	Zero run measurement start (3000-series)	If the sample measurement condition is zero, starts a zero run measurement.	No	No
412	Continuous measurement start (scan) (3000-series)	Starts a continuous measurement. The scan notification method is used for receive data.	No	Yes
413	Continuous measurement start (interrupt) (3000-series)	Starts a continuous measurement. The interrupt notification method is used for receive data. Measurement termination (3000-series)	No	Yes
414	Measurement termination (3000-series)	Terminates a continuous measurement.	No	No[*1]
415	Data request (3000-series)	Requests display data in the idle measurement status or the latch data generated by the measurement command.	No	Yes
416	Statistic processing execution (3000-series)	Lights the statistic processing LED and processes the statistics.	No	No
417	Statistic processing non-execution (3000-series)	Turns OFF the statistic processing LED. Statistics are not processed.	No	No
418	All statistic memory clear (3000-series)	Clears statistic processing memories of all programs.	No	No

Sequence No.	Communications sequence name	Function	Ladder interface	
			Send word allocation	Receive word allocation
419	Statistic memory clear (3000-series)	Clears statistic processing memories of program under display.	No	No
420	Statistic result request (3000-series)	Requests statistic processing result.	No	Yes
421	Memory switch set 1 (3000-series)	Sets memory switches.	Yes	No
422	Memory switch set 2 (3000-series)	Sets memory switches.	Yes	No
423	Simple AVG times set (3000-series)	Taking the simple average as the averaging method, sets the averaging times per measurement interval 4.	Yes	No
424	AVG move interval set (3000-series)	Taking the average move as the averaging method, sets the measurement interval number.	Yes	No
425	AVG move (H) times set (3000-series)	Taking the average move and high-speed data output as the averaging method, sets the averaging times per measurement interval 4.	Yes	No
426	AVG move (L) times set (3000-series)	Taking the average move and low-speed data output as the averaging method, sets the averaging times per measurement interval 4.	Yes	No
427	Automatic detection set (3000-series)	Sets work automatic detection function.	Yes	No
428	Automatic detection release (3000-series)	Releases the settings of work automatic detection function.	No	No
429	Automatic detection list request (3000-series)	Requests the settings of work automatic detection function.	No	Yes
430	3Z4L initialize (3000-series)	Clears the 3Z4L, sets the mm unit, sets the memory unit, does not processes statistics, and clears all statistic memory.	Yes	No
431	Measurement condition set (4000-series)	Sets measurement conditions.	Yes	No
432	Measurement condition release (4000-series)	Releases measurement conditions that have been set.	Yes	No
433	Measurement condition list request (4000-series)	Requests the measurement conditions that have been set and other settings.	No	Yes
434	Single run measurement start (4000-series)	When the sample measurement condition is from 1 to 999, performs a single run measurement and requests the measurement results.	No	Yes
435	Deflection measurement start (4000-series)	Starts a deflection measurement.	No	No
436	Continuous measurement start (scan) (4000-series)	Starts a continuous measurement. The scan notification method is used for receive data.	No	Yes
437	Continuous measurement start (interrupt) (4000-series)	Starts a continuous measurement. The interrupt notification method is used for receive data.	No	Yes
438	Measurement termination (4000-series)	Terminates continuous measurement.	No	No *1
439	Data request (4000-series)	Requests measurement data in the idle measurement status or the latch data generated by the measurement command.	No	Yes
440	Forced positive zero (4000-series)	Sets the forced zero direction to positive (+).	No	No
441	Forced negative zero (4000-series)	Sets the forced zero direction to negative (–).	No	No

Sequence No.	Communications sequence name	Function	Ladder interface	
			Send word allocation	Receive word allocation
442	Forced zero release (4000-series)	Releases the forced zero direction.	No	No
443	3Z4L initialize (4000-series)	Clears the 3Z4L, sets the mm unit, and clears the memory unit settings.	Yes	No
444	General-purpose command 1	Used to send data of a specified data length, and receive only OK as the receive data.	Yes	No
445	General-purpose command 2	Used to send data of a specified data length, and receive data other than OK.	Yes	Yes

*1Depends on the measurement contents.

Note Ladder Interface Settings

YES: User settings are required for the 2nd and 3rd operands of PMCR.

NO: Send word allocation: Set a dummy word address for the 3rd operand (D).
Receive word allocation: Set the constant 0000 for the 2rd operand (S).

Connections

The connections for the 3Z4L Laser Micrometer Protocol are shown below.

RS-232C Connection

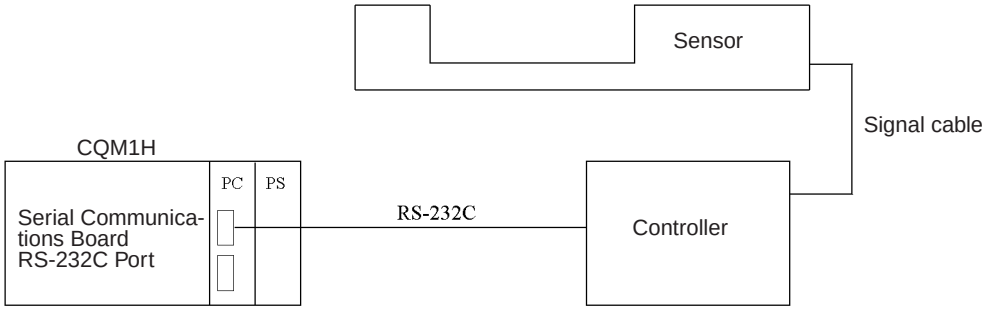

Serial Communications Board: D-sub 9 pin (female)

Signal name	Pin No.
FG	1
SD	2
RD	3
RS	4
CS	5
DR	7
ER	8
SG	9

Controller: D-sub 25 pin (female)

Pin No.	Signal name
1	FG
2	TXD
3	RXD
4	RTS
5	CTS
6	DSR
7	SG
20	DTR

DIP Switch Settings

Shown below are the settings of 3Z4L-3000, 3Z4L-4000-series DIP switches required to use the system protocol sequences.

3Z4L-3000 Series

- **DIP Switch 1**

No.	Setting	Status
1	Baud rate	ON/OFF
2		ON/OFF
3	Handshaking procedure	ON/OFF
4	RS-232C interface use selection	ON/OFF
5		ON/OFF
6		ON/OFF

- **DIP Switch 2**

No.	Setting	Status	
1	Selection for measurement section	ON/OFF	Set these settings according to the sensor connected.
2		ON/OFF	
3		ON/OFF	
4		ON/OFF	
5	Setting of minimum read value	ON/OFF	Set these settings for 4 digits in the decimal portion.
6		ON/OFF	
7	Setting of transparent body measurement function	ON/OFF	
8	Setting of simultaneous measurement function	ON/OFF	

- **DIP Switch 3**

No.	Setting	Status	
1	Setting of measurement function by 2 measurement instruments	ON/OFF	
2		ON/OFF	
3		ON/OFF	
4		ON/OFF	
5	Error data exclusion function	ON/OFF	This protocol does not support the error data exclusion function
6	Multistep selection function	ON/OFF	

3Z4L-4000 Series

- **DIP Switch 1**

No.	Setting	Status
1	Baud rate	ON/OFF
2		ON/OFF
3	Hand-shake procedure	ON/OFF
4	Delimiter	ON/OFF
5		ON/OFF
6	RS-232C interface use selection	ON/OFF
7		ON/OFF
8		ON/OFF

- **DIP Switch 2**

No.	Setting	Status	
1	Selection for measurement section	ON/OFF	Set these settings according to the sensor connected.
2		ON/OFF	
3		ON/OFF	
4		ON/OFF	
5	Setting of minimum read value	ON/OFF	Set these settings for 4 digits in the decimal portion.
6		ON/OFF	
7	Display unit	ON/OFF	
8	External command setting	ON/OFF	

Delimiter Control Code Setting

3Z4L-4000 Series

The delimiter control codes must be set on DIP switch SW1 for the 3Z4L-4000 Series. Turn off pins 4 and 5, set the delimiter codes to CR+LF, and set the delimiter code control setting in the sequence to CR+LF. See the setting for CR+LF in the following diagram.

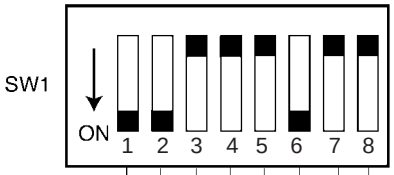

Turn OFF.

Turn OFF (to use a general-purpose interface)

Turn ON (to use a general-purpose interface)

Delimiter Setting

Delimiter / Pin	CR+LF	CR	LF
Pin 4	OFF	ON	OFF
Pin 5	OFF	OFF	ON

Handshaking
ON: Control (recognize DRT input)
OFF: 3-wire method (non-protocol)

Baud Rate

Baud rate / Pin	1200	2400	4800	9600
Pin 1	OFF	ON	OFF	ON
Pin 2	OFF	OFF	ON	ON

3Z4L-3000 Series

The delimiter control code does not need to be set on the DIP switch for the 3Z4L-3000 Series. Set the delimiter control codes in the sequence to CR+LF for the send code and to CR or CR+LF for the receive code. See the settings in the following diagram.

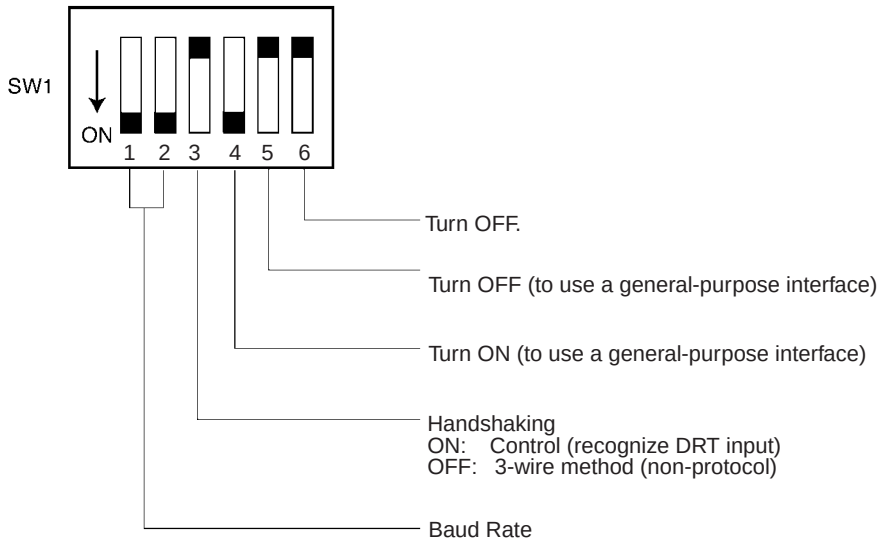

Pin \ Baud rate	1200	2400	4800	9600
Pin 1	OFF	ON	OFF	ON
Pin 2	OFF	OFF	ON	ON

The High-speed 3Z4L-3000-series Meters must have the delimiter control codes set using the memory switches. Set both the send and receive codes to CR+LF.

3Z4L Clear (Sequence No. 400)

This sequence resets errors, data, analog output, and decision result, and puts the Laser Micrometer into standby.

Send Data Word Allocation (2nd Operand of PMCR)

None.

Receive Data Word Allocation (3rd Operand of PMCR)

None.

Memory Switch Set (Sequence No. 401)

This sequence sets memory switches and the area for the work position LED.

Send Data Word Allocation (2nd Operand of PMCR)

First word of send data					
+0	Number of send data words				
+1	W	X	Y	Z	
+2	(Undefined)			V	

Offset	Contents (data format)	Data	
		3000-series	4000-series
+0	Number of send data words (4 digits BCD)	0003 (fixed)	0003 (fixed)
+1	w (1 digit BCD)	Using buzzer sound: 0 to 3	Number of digits for extinguishing indicator: 0 to 2
	x (1 digit BCD)	Automatic latch release time: 0 to 9	I/O IF RUN Input: 0 or 1
	y (1 digit BCD)	Using print timer, the setting for simultaneous measurement: 0 to 3 (high-speed), 0 to 1 (other)	Display of Err-0: 0 or 1
	z (1 digit BCD)	Display of the comma for 1/1000s digit, number of display digits: 0 to 5 (high-speed), 0 to 3 (other)	Averaging method: 0 to 2 (high-speed), 0 (other)
+2	v (1 digit BCD)	Measurement interval 4: 0 to 6	Use of comma: 0 or 1

Receive Data Word Allocation (3rd Operand of PMCR)

None.

mm Unit Set (Sequence No. 402)

This sequence sets the display unit to mm.

Send Data Word Allocation (2nd Operand of PMCR)

None.

Receive Data Word Allocation (3rd Operand of PMCR)

None.

Note This sequence can be used for the 3Z4L-4000 Series only when pin 8 on DIP switch SW2 is turned ON.

E Unit Set (Sequence No. 403)

This sequence sets the display unit to E.

Send Data Word Allocation (2nd Operand of PMCR)

None.

Receive Data Word Allocation (3rd Operand of PMCR)

None.

Note This sequence can be used for the 3Z4L-4000 Series only when pin 8 on DIP switch SW2 is turned ON.

Calibration Set (Sequence No. 404)

This sequence calibrates the Laser Micrometer.

Send Data Word Allocation (2nd Operand of PMCR)

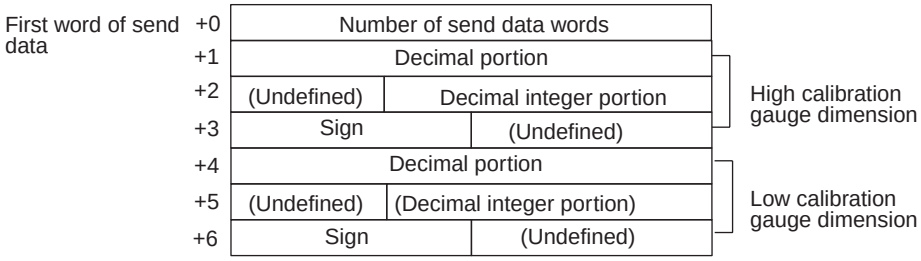

Offset	Contents (data format)	Data	
+0	Number of send data words (4 digits BCD)	0007 (fixed)	
+1	HC gauge dimension (Decimal portion) (4 digits BCD)	0000 to 9999	**Example** –123.4567 +1: 4 5 6 7 +2: 0 1 2 3 +3: 2 D 0 0
+2	HC gauge dimension (integer portion) (3 digits BCD)	000 to 999	**Example** –123.4567 +1: 4 5 6 7 +2: 0 1 2 3 +3: 2 D 0 0
+3	HC gauge dimension (Sign) (ASCII 1 character)	if +: 20(‘ ’) if –: 2D(‘–’)	
+4 to +6	LC gauge dimensions	Same as HC gauge dimensions	

Note 1. For this sequence, both the high and low calibration gauges must be set.

2. The limit value, reference value, and offset value can be set to 3 digits for the integer portion and to 4 digits for the decimal portion.

Receive Data Word Allocation (3rd Operand of PMCR)

None.

Calibration Release (Sequence No. 405)

This sequence releases the calibration of the Laser Micrometer.

Send Data Word Allocation (2nd Operand of PMCR)

None.

Receive Data Word Allocation (3rd Operand of PMCR)

None.

Note This sequence releases both the high and low calibration.

Program Number Set (3000-series) (Sequence No. 406)

This sequence switches the program number to a specified number.

Send Data Word Allocation (2nd Operand of PMCR)

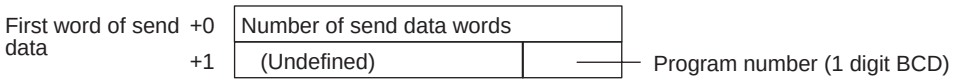

Offset	Contents (data format)	Data
+0	Number of send data words (4 digits BCD)	0002 (fixed)
+1	Program number (1 digit BCD)	0 to 9

Receive Data Word Allocation (3rd Operand of PMCR)

None.

Note Retry processing is not performed for this sequence.

Measurement Condition Set (3000-series) (Sequence No. 407)

This sequence sets measurement conditions. Conditions to be set can be selected by setting Yes/No flags.

Send Data Word Allocation (2nd Operand of PMCR)

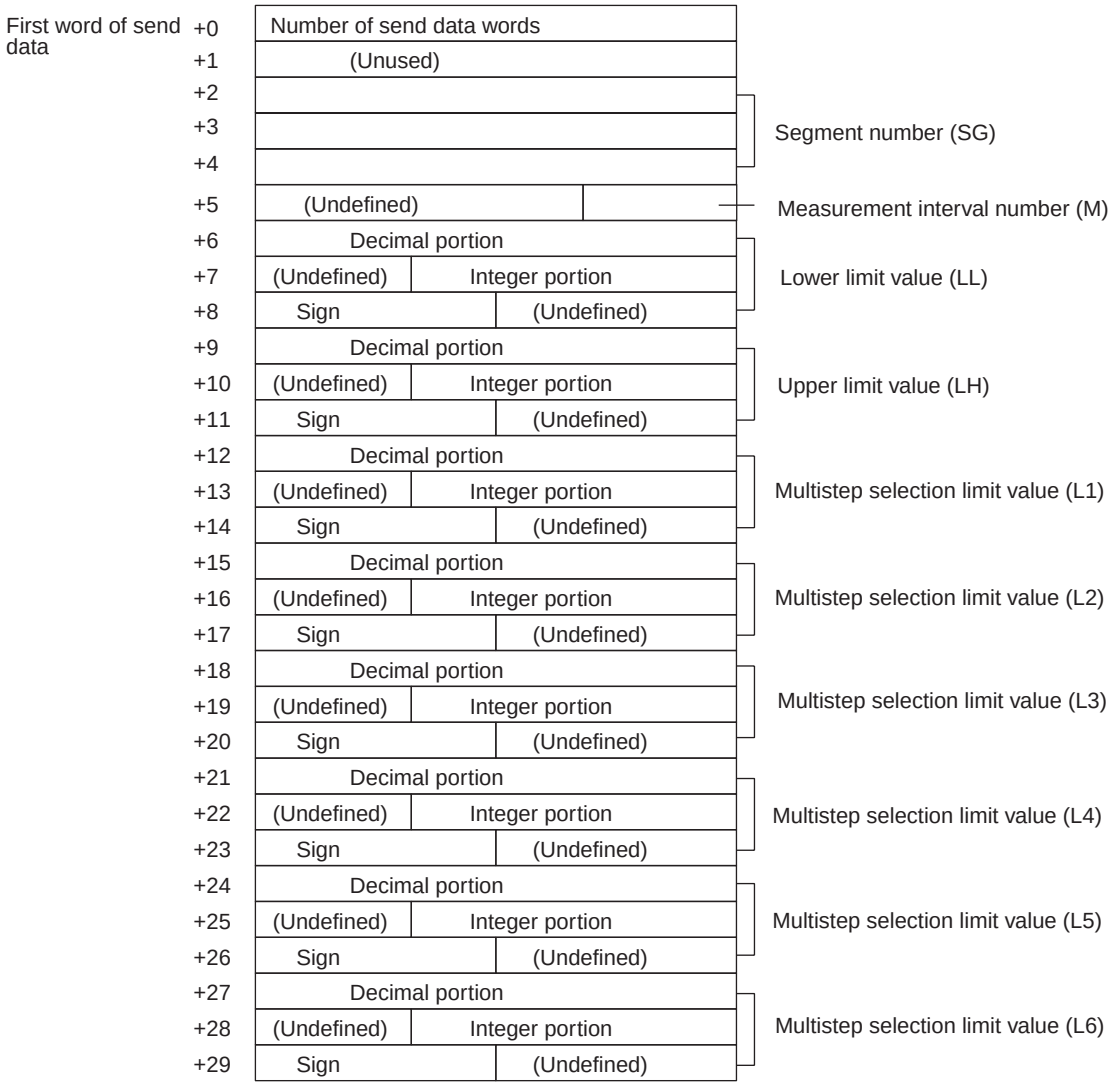

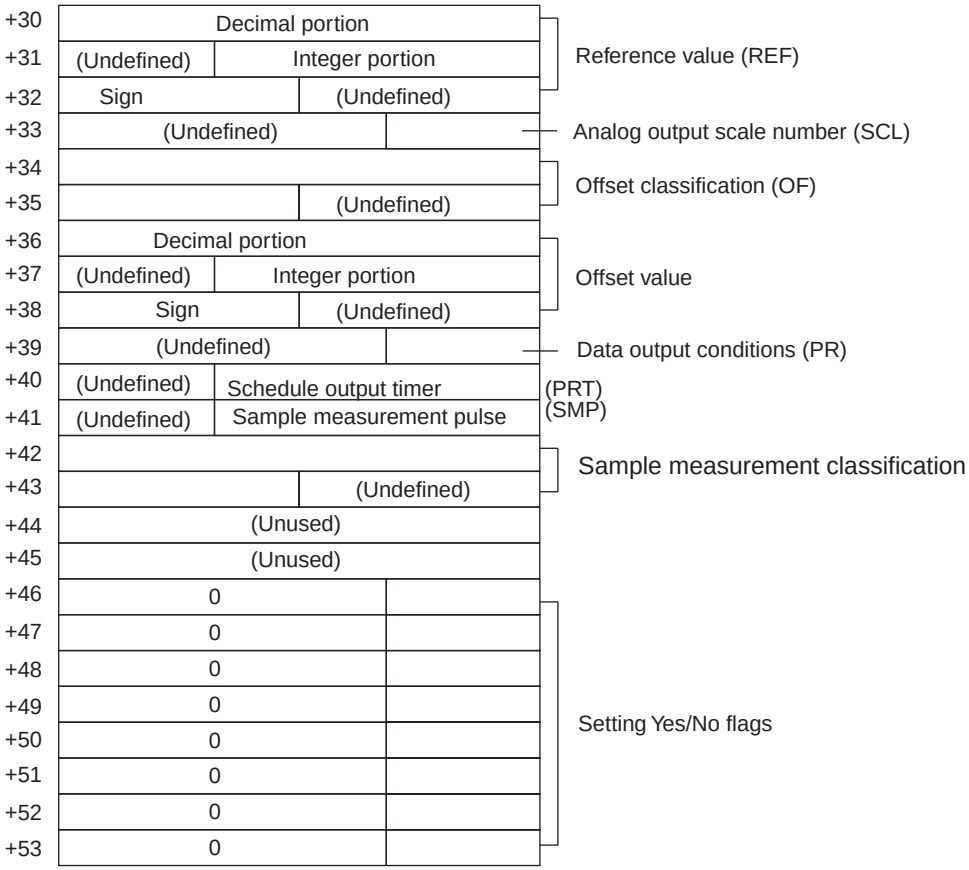

Offset	Contents (data format)	Data	
+0	Number of send data words (4 digits BCD)	0054 (fixed)	
+1	Unused	Undefined	
+2 to +4	Segment number (ASCII 6 characters)	Combination of 31(‘1’) to 36(‘6’), 20(‘ ’)	
+5	Measurement interval number (1 digit BCD)	1 to 4	
+6	Lower limit value (decimal portion) (4 digits BCD)	0000 to 9999	**Example** –123.4567 +6 4 5 6 7 +7 0 1 2 3 +8 2 D 0 0
+7	Lower limit value (Integer portion) (3 digits BCD)	000 to 999	
+8	Lower limit value (Sign) (ASCII 1 character)	if +: 20(‘ ’) if –: 2D(‘–’)	
+9 to +11	Upper limit value	Same as lower limit values	
+12 to +14	Multistep selection limit value (L1)	Same as lower limit values	
+15 to +17	Multistep selection limit value (L2)	Same as lower limit values	
+18 to +20	Multistep selection limit value (L3)	Same as lower limit values	
+21 to +23	Multistep selection limit value (L4)	Same as lower limit values	
+24 to +26	Multistep selection limit value (L5)	Same as lower limit values	
+27 to +29	Multistep selection limit value (L6)	Same as lower limit values	
+30 to +32	Reference value	Same as lower limit values	

Offset	Contents (data format)	Data
+33	Analog output scale number (1 digit BCD)	1 to 3
+34 to +35	Offset classification (ASCII 3 characters)	4F4620 (“OF”), 4F4D20 (“OM”)
+36 to +38	Offset value	Same as lower limit values
+39	Data output conditions (1 digit BCD)	0 to 6
+40	Scheduled output timer (3 digits BCD)	000 to 999
+41	Sample measurement pulse (3 digits BCD)	000 to 999
+42 to +43	Sample measurement classification (ASCII 3 characters)	415647 (“AVG”), 4D4158 (“MAX”) 4D494E (“MIN”), 524E47 (“RNG”)
+44 to +45	Unused	Undefined
+46	Yes/No for segment setting (1 digit BCD)	Set: 1 (SG) Don’t set: 0
+47	Yes/No for measurement interval number setting (1 digit BCD)	Set: 1 (M) Don’t set: 0
+48	Yes/No for upper/lower limit value setting (1 digit BCD)	Set: 1 (LL,LH) Don’t set: 0
+49	Yes/No for multistep selection limit value (1 digit BCD)	Set: 1 (L1,L2,L3,L4,L5,L6) Don’t set: 0
+50	Yes/No for reference setting (1 digit BCD)	Set: 1 (REF, SCL) Don’t set: 0
+51	Yes/No for offset value setting (1 digit BCD)	Set: 1 (OF or OM) Don’t set: 0
+52	Yes/No for data output condition setting (1 digit BCD)	Set: 1 (PR, PRT) Don’t set: 0
+53	Yes/No for sample measurement pulse setting (1 digit BCD)	Set: 1 (SMP, MAX or MIN or RNG or AVG) Don’t set: 0

Receive Data Word Allocation (3rd Operand of PMCR)

None.

Note 1. This sequence cannot be used to set the error lower limit (EL), error upper limit (EH), error exclusion counter (CNT) of the error data exclusion function (centerless grinder function).

2. The following settings must be made together with this sequence; they cannot be set separately.
   Lower limit, upper limit
   Multistep selection limit
   Reference value, analog output scale number
   Data output conditions, scheduled print timer

3. The limit value, reference value, and offset value can be set to 3 digits for the integer portion and to 4 digits for the decimal portion.

Measurement Condition Release (3000-series) (Sequence No. 408)

This sequence releases the measurement conditions that have been set.

Send Data Word Allocation (2nd Operand of PMCR)

Send data word allocation is similar to that of sequence No. 407 (Measurement Condition Set). However, only the setting Yes/No flags at +46 to +53 from the send data leading word can be used.

Receive Data Word Allocation (3rd Operand of PMCR)

None.

Note
1. The following conditions are used when the measurement conditions are released: Segment becomes 1, measurement interval becomes 1, the number of sample measurement pulses becomes 1.
2. The following conditions cannot be released with this sequence: error lower limit (EL), error upper limit (EH), error exclusion counter (CNT) of the error data exclusion function (centerless grinder function).
3. The following settings cannot be released separately using this sequence.
   Lower limit, Upper limit
   Multistep selection limit
   Reference value, analog output scale number
   Data output conditions, scheduled print timer

Measurement Condition List Request (3000-series) (Sequence No. 409)

This sequence requests the measurement condition settings that have been set and other settings.

Send Data Word Allocation (2nd Operand of PMCR)

None.

Receive Data Word Allocation (3rd Operand of PMCR)

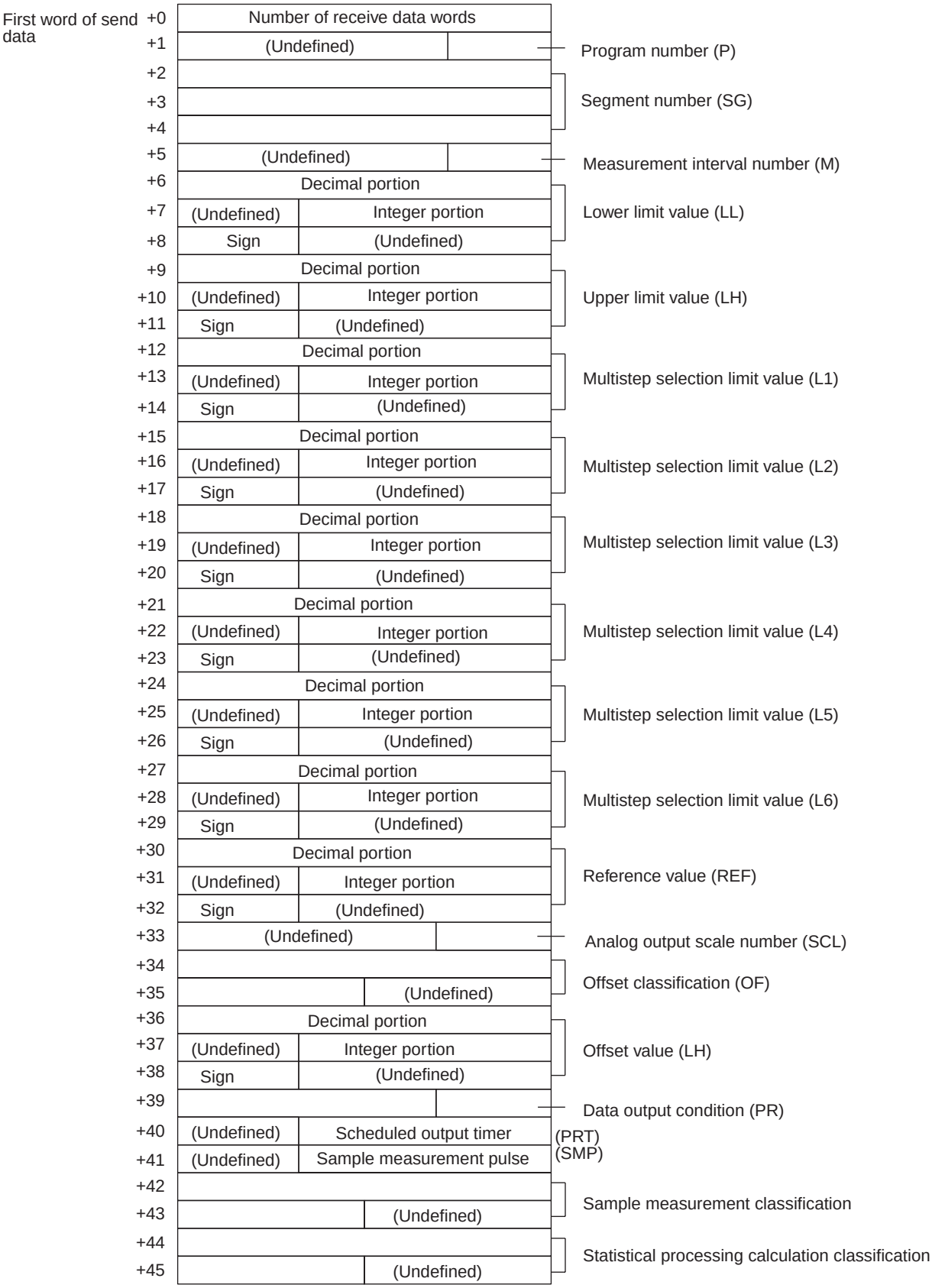

Offset	Contents (data format)	Data	
+0	Number of receive data words (4 digits BCD)	0046 (fixed)	
+1	Program number (1 digit BCD)	0 to 9	
+2 to +4	Segment number (ASCII 6 characters)	Combination of 31('1') to 36('6'), 20(' ')	
+5	Measurement interval number (1 digit BCD)	1 to 4	
+6	Lower limit value (Decimal portion) (4 digits BCD)	0000 to 9999	**Example** –123.4567 +6 4 5 6 7 +7 0 1 2 3 +8 F 0 0 0
+7	Lower limit value (Integer portion) (3 digits BCD)	000 to 999	
+8	Lower limit value (Sign) (BIN)	If +: 0 If – : F	
+9 to +11	Upper limit value	Same as lower limit values	
+12 to +14	Multistep selection limit value (L1)	Same as lower limit values	
+15 to +17	Multistep selection limit value (L2)	Same as lower limit values	
+18 to +20	Multistep selection limit value (L3)	Same as lower limit values	
+21 to +23	Multistep selection limit value (L4)	Same as lower limit values	
+24 to +26	Multistep selection limit value (L5)	Same as lower limit values	
+27 to +29	Multistep selection limit value (L6)	Same as lower limit values	
+30 to +32	Reference value	Same as lower limit values	
+33	Analog output scale number (1 digit BCD)	1 to 3	
+34 to +35	Offset classification (ASCII 3 characters)	4F4620 ("OF"), 4F4D20 ("OM")	
+36 to +38	Offset value	Same as lower limit values	
+39	Data output condition (1 digit BCD)	0 to 6	
+40	Scheduled output timer (3 digits BCD)	000 to 999	
+41	Sample measurement pulse (3 digits BCD)	000 to 999	
+42 to +43	Sample measurement classification (ASCII 3 characters)	415647 ("AVG"), 4D4158 ("MAX") 4D494E ("MIN"), 524E47 ("RNG")	
+44 to +45	Statistical processing calculation classification (ASCII 3 characters)	535420 ("ST"), 4E5354 ("NST")	

Note This sequence cannot be used to request the lower limit (EL), error upper limit (EH), error exclusion counter (CNT) of the error data exclusion function (centerless grinder function).

Single Run Measurement Start (3000-series) (Sequence No. 410)

When the sample measurement condition is from 1 to 999, this sequence performs a single run measurement and requests the measurement results

Send Data Word Allocation (2nd Operand of PMCR)

None.

Receive Data Word Allocation (3rd Operand of PMCR)

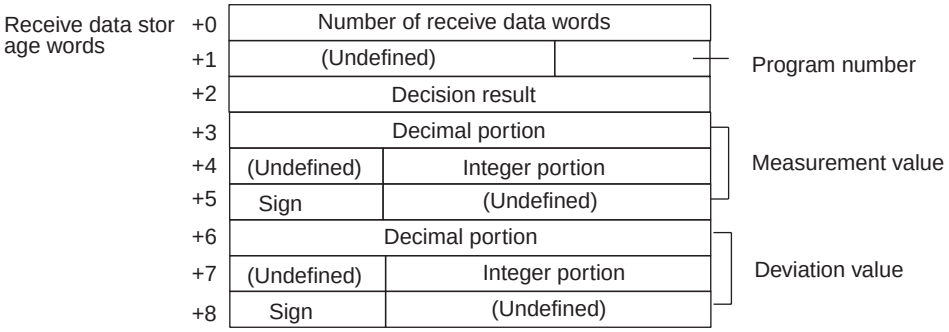

Offset	Contents (data format)	Data	
+0	Number of receive data words (4 digit BCD)	With no reference setting: 0006 With reference setting: 0009	
+1	Program number (1 digit BCD)	0 to 9	
+2	Decision result (ASCII 2 characters)	With no limit setting: 0000 With limit setting: 2B4E (“+N”), 4F4B (“OK”), 2D4E (“–N”)	
+3	Measurement value (decimal portion) (4 digits BCD)	0000 to 9999	**Example** –123.4567 +3: 4 5 6 7 +4: 0 1 2 3 +5: F 0 0 0
+4	Measurement value (integer portion) (3 digits BCD)	000 to 999	
+5	Measurement value (Sign) (BIN)	If +: 0 If –: F	
+6 to +8	Deviation value	Same as measurement value *The deviation will be stored in this area only when reference setting is made.	

Zero Run Measurement Start (3000-series) (Sequence No. 411)

If the sample measurement condition is zero, a zero run measurement is started.

Send Data Word Allocation (2nd Operand of PMCR)

None.

Receive Data Word Allocation (3rd Operand of PMCR)

None.

Note The zero run measurement keeps measuring until sequence No. 414 (Measurement Termination) is executed.

Continuous Measurement Start (Scan) (3000-series) (Sequence No. 412)

A continuous measurement is started. The scan notification method is used for the receive data.

Send Data Word Allocation (2nd Operand of PMCR)

None.

Receive Data Word Allocation (3rd Operand of PMCR)

The receive data word allocation is similar to that of sequence No. 410 (Single Run Measurement Start).

Note 1. Since this sequence repeats itself within the sequence, once it is executed, it remains in the execution state until cancelled.
2. Even if execution is cancelled, the Laser Micrometer still keeps measuring. Execute sequence No. 414 (Measurement Termination) to end the sequence.

Continuous Measurement Start (Interrupt) (3000-series) (Sequence No. 413)

A continuous measurement is started. The interrupt notification method is used for the receive data and the interrupt No. is 101.

Send Data Word Allocation (2nd Operand of PMCR)

None.

Receive Data Word Allocation (3rd Operand of PMCR)

The receive data word allocation is similar to that of sequence No. 410 (Single Run Measurement Start).

Note 1. Since this sequence repeats itself within the sequence, once it is executed, it remains in the execution state until cancelled.
2. Even if execution is cancelled, the Laser Micrometer still keeps measuring. Execute sequence No. 414 (Measurement Termination) to end the sequence.

Measurement Termination (3000-series) (Sequence No. 414)

This sequence terminates a continuous measurement.

Send Data Word Allocation (2nd Operand of PMCR)

None.

Receive Data Word Allocation (3rd Operand of PMCR)

For continuous measurement: Not available

For Zero Run Measurement

The receive data word allocation is similar to that of sequence No. 410 (Single Run Measurement Start).

Data Request (3000-series) (Sequence No. 415)

This sequence requests display data in the idle measurement status or the latch data generated by the measurement command.

Send Data Word Allocation (2nd Operand of PMCR)

None.

Receive Data Word Allocation (3rd Operand of PMCR)

The receive data word allocation is similar to that of sequence No. 410 (Single Run Measurement Start).

Statistic Processing Execution (3000-series) (Sequence No. 416)

This sequence lights the statistic processing LED and implements the statistic processing.

Send Data Word Allocation (2nd Operand of PMCR)

None.

Receive Data Word Allocation (3rd Operand of PMCR)

None.

Statistic Processing Non-execution (3000-series) (Sequence No. 417)

This sequence turns the statistic processing LED off and does not carry out the statistic processing.

Send Data Word Allocation (2nd Operand of PMCR)
None.

Receive Data Word Allocation (3rd Operand of PMCR)
None.

All Statistic Memory Clear (3000-series) (Sequence No. 418)

This sequence clears statistic processing memories of all programs.

Send Data Word Allocation (2nd Operand of PMCR)
None.

Receive Data Word Allocation (3rd Operand of PMCR)
None.

Statistic Processing Memory Clear (3000-series) (Sequence No. 419)

This sequence clears statistic processing memories of the program under display.

Send Data Word Allocation (2nd Operand of PMCR)
None.

Receive Data Word Allocation (3rd Operand of PMCR)
None.

Statistic Result Request (3000-series) (Sequence No. 420)

This sequence requests the statistic processing results.

Send Data Word Allocation (2nd Operand of PMCR)
None.

Receive Data Word Allocation (3rd Operand of PMCR)

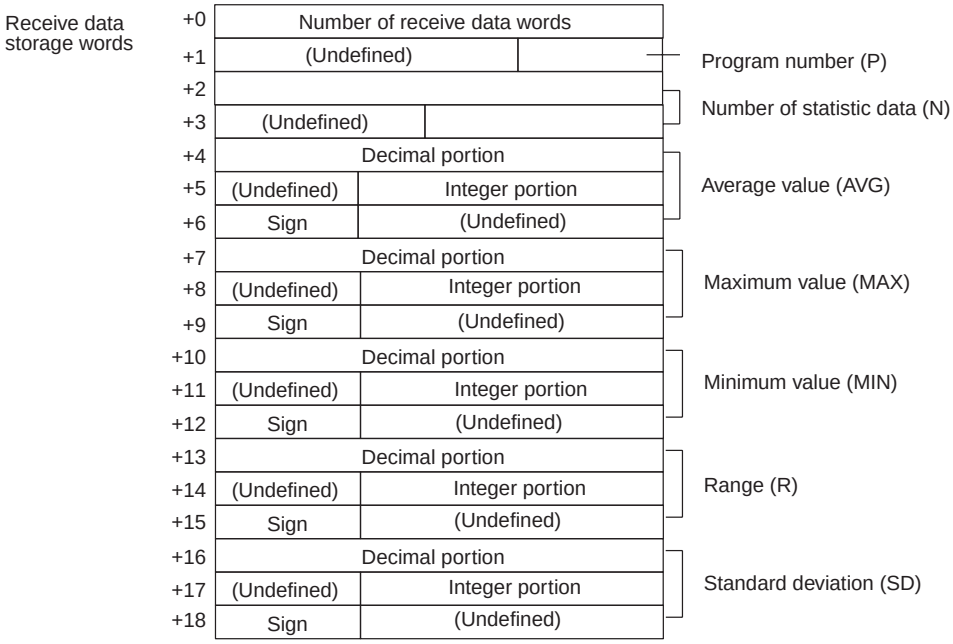

Offset	Contents (data format)	Data	
+0	Number of receive data words (4 digits BCD)	0019 (fixed)	
+1	Program number (1digit BCD)	0 to 9	
+2 to +3	Number of statistic data (6 digits BCD)	000000 to 999999	
+4	Average value (decimal portion) (4 digits BCD)	0000 to 9999	**Example** –123.4567 +4: 4 5 6 7 +5: 0 1 2 3 +6: F 0 0 0
+5	Average value (integer portion) (4 digits BCD)	000 to 999	
+6	Average value (Sign) (BIN)	If +: 0 If –: F	
+7 to +9	Maximum value	Same as average value	
+10 to +12	Minimum value	Same as average value	
+13 to +15	Range	Same as average value	
+16 to +18	Standard deviation	Same as average value	

Note The number of digits of the Decimal portion is fixed to 4 digits. If a deviation calculation results in a value with 5 decimal places, it will be stored with one digit overflowing into the integer portion.
Examples: The value –0.1234 is stored as follows:
Area of decimal portion: 1234; Area of integer portion: 0000; Sign area: F000
The value –0.12345 is stored as follows:
Area of decimal portion: 2345; Area of integer portion: 0001; Sign area: F000

Memory Switch Set 1 (3000-series, High-speed Type) (Sequence No. 421)

This sequence sets memory switches.

Send Data Word Allocation (2nd Operand of PMCR)

First word of send data					
+0	Number of send data words				
+1	W	X	Y	Z	
+2	(Undefined)			V	

Offset	Contents (data format)	Data
+0	Number of send data words (4 digits BCD)	0003 (fixed)
+1	w (1 digits BCD)	0: For single run or zero run measurement start displaying '---.' 1: For single run or zero run measurement start displaying the previous measured value
	x (1 digit BCD)	0: Perform single run measurement to the RUN signal of I/O IF 1: Repeat measurement while the RUN signal of I/O IF is input
	y (1 digit BCD)	*0: RS-232C Delimiter CR+LF 1: RS-232C Delimiter CR 2: RS-232C Delimiter LF
	z (1 digit BCD)	0: RS-232C no parity check 1: RS-232C odd parity check 2: RS-232C even parity check
+2	v (1 digit BCD)	0: Displaying 'Err-0' 1: Displaying '0'

Note Settings marked with asterisks are required for this protocol.

Receive Data Word Allocation (3rd Operand of PMCR)

None.

Note 1. Memory switches cannot be set when DIP switch SW3, pin 5 of the Laser Micrometer is not turned ON.

2. The setting (y, z) of RS-232C takes effect when the power supply is turned back on.

Memory Switch Set 2 (3000-series, High-speed Type) (Sequence No. 422)

This sequence sets memory switches.

Send Data Word Allocation (2nd Operand of PMCR)

First word of send data	+0	Number of send data words			
	+1	W	X	Y	Z
	+2	(Undefined)			V

Offset	Contents (data format)	Data
+0	Number of send data words (4 digits BCD)	0003 (fixed)
+1	w (1 digit BCD)	0: Work automatic detection is not performed 1: Work automatic detection is performed Diameter detection method (1 scan) 2: Work automatic detection is performed Diameter detection method (8 scan) 3: Work automatic detection is performed Position detection method (1 scan)
	x (1 digit BCD)	For expansion 0 (fixed)
	y (1 digit BCD)	For expansion 0 (fixed)
	z (1 digit BCD)	For expansion 0 (fixed)
+2	v (1 digit BCD)	*0:Error data exclusion function is not used 1:Error data exclusion function is used

Note Settings marked with asterisks are required for this protocol.

Receive Data Word Allocation (3rd Operand of PMCR)

None.

Note Memory switches cannot be set when DIP switch SW3, pin 5 of the Laser Micrometer is not turned ON.

Simple AVG Times Set (3000-series, High-speed Type) (Sequence No. 423)

This sequence uses the simple average as the averaging method and sets the averaging times per measurement interval 4.

Send Data Word Allocation (2nd Operand of PMCR)

First word of send data	+0	Number of send data words
	+1	Number of averaging times

Offset	Contents (data format)	Data
+0	Number of send data words (4 digits BCD)	0002 (fixed)
+1	Number of averaging times (4 digits BCD)	1 to 2048

Receive Data Word Allocation (3rd Operand of PMCR)

None.

Note This sequence cannot be used when DIP switch SW3, pin 5 of the Laser Micrometer is not turned ON.

AVG Move Interval Set (3000-series, High-speed Type) (Sequence No. 424)

This sequence uses the average move as the averaging method and sets the measurement interval number.

Send Data Word Allocation (2nd Operand of PMCR)

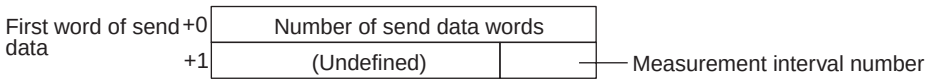

Offset	Contents (data format)	Data
+0	Number of send data words (4 digits BCD)	0002 (fixed)
+1	Measurement interval number (1 digit BCD)	1 to 4

Receive Data Word Allocation (3rd Operand of PMCR)

None.

Note This sequence cannot be used when DIP switch SW3, pin 5 of the Laser Micrometer is not turned ON.

AVG Move (H) Times Set (3000-series, High-speed Type) (Sequence No. 425)

This sequence uses the average move and high-speed data output as the averaging method and sets the averaging times per measurement interval 4.

Send Data Word Allocation (2nd Operand of PMCR)

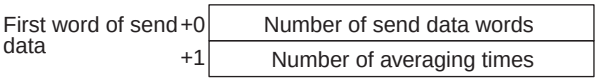

Offset	Contents (data format)	Data
+0	Number of send data words (4 digits BCD)	0002 (fixed)
+1	Number of averaging times (4 digits BCD)	16 to 2048

Receive Data Word Allocation (3rd Operand of PMCR)

None.

Note This sequence cannot be used when DIP switch SW3, pin 5 of the Laser Micrometer is not turned ON.

AVG Move (L) Times Set (3000-series, High-speed Type) (Sequence No. 426)

This sequence uses the average move and low-speed data output as the averaging method and sets the averaging times per measurement interval 4.

Send Data Word Allocation (2nd Operand of PMCR)

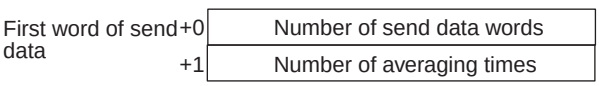

Offset	Contents (data format)	Data
+0	Number of send data words (4 digits BCD)	0002 (fixed)
+1	Number of averaging times (4 digits BCD)	32 to 2048

Receive Data Word Allocation (3rd Operand of PMCR)

None.

Note This sequence cannot be used when DIP switch SW3, pin 5 of the Laser Micrometer is not turned ON.

Automatic Detection Set (3000-series, High-speed Type) (Sequence No. 427)

This sequence sets the work automatic detection function.

Send Data Word Allocation (2nd Operand of PMCR)

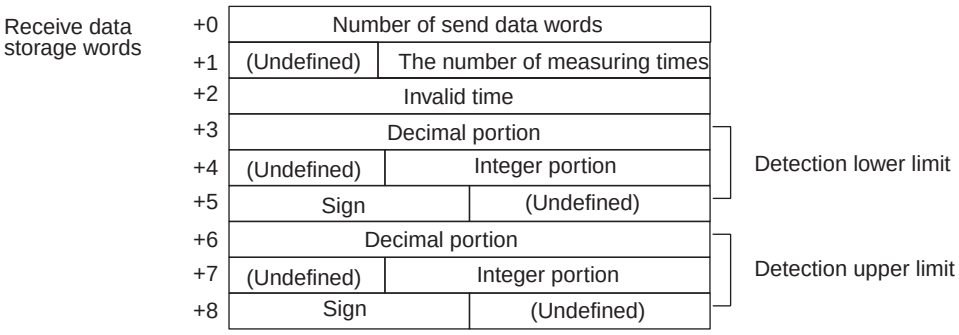

Offset	Contents (data format)	Data	
+0	Number of send data words (4 digits BCD)	0009 (fixed)	
+1	Number of measurements (3 digits BCD)	001 to 999	
+2	Invalid time (4 digits BCD)	0001 to 9999	
+3	Detection lower limit (decimal portion) (4 digits BCD)	0000 to 9999	**Example** –123.4567 +3: 4 5 6 7 +4: 0 1 2 3 +5: 2 D 0 0
+4	Detection lower limit (integer portion) (3 digits BCD)	000 to 999	
+5	Detection lower limit (Sign) (ASCII 1 character)	If +: 20 (‘ ’) If – : 2D (‘–’)	
+6 to +8	Detection upper limit	Same as detection lower limit	

Receive Data Word Allocation (3rd Operand of PMCR)

None.

Note This sequence cannot be used when DIP switch SW3, pin 5 of the Laser Micrometer is not turned ON.

Automatic Detection Release (3000-series, High-speed Type) (Sequence No. 428)

This sequence releases the setting of work automatic detection function.

Send Data Word Allocation (2nd Operand of PMCR)

None.

Receive Data Word Allocation (3rd Operand of PMCR)

None.

Note This sequence cannot be used when DIP switch SW3, pin 5 of the Laser Micrometer is not turned ON.

Automatic Detection List Request (3000-series, High-speed Type) (Sequence No. 429)

This sequence requests the settings of work automatic detection function.

Send Data Word Allocation (2nd Operand of PMCR)

None.

Receive Data Word Allocation (3rd Operand of PMCR)

Receive data storage words

+0	Number of receive data words		
+1	(Undefined)	The number of measuring times	
+2	Invalid time		
+3	Decimal portion		Detection lower limit
+4	(Undefined)	Integer portion	
+5	Sign	(Undefined)	
+6	Decimal portion		Detection upper limit
+7	(Undefined)	Integer portion	
+8	Sign	(Undefined)	

Offset	Contents (data format)	Data	
+0	Number of receive data words (4 digits BCD)	0009 (fixed)	
+1	The number of measuring times (3 digits BCD)	000 to 999	
+2	Invalid time (4 digits BCD)	0001 to 9999	
+3	Detection lower limit (decimal portion) (4 digits BCD)	0000 to 9999	**Example -**123.4567 +3 4 5 6 7 +4 0 1 2 3 +5 F 0 0 0
+4	Detection lower limit (integer portion) (3 digits BCD)	000 to 999	
+5	Detection lower limit (Sign) (BIN)	If +: 0 If –: F	
+6 to +8	Detection upper limit	Same as detection lower limit	

Note This sequence cannot be used when DIP switch SW3, pin 5 of the Laser Micrometer is not turned ON.

3Z4L Initialize (3000-series) (Sequence No. 430)

This sequence clears the 3Z4L, sets the mm unit, sets memory switches, does not process statistics, and clears the statistic memory.

Send Data Word Allocation (2nd Operand of PMCR)

The send data word allocation is similar to that of sequence No. 401 (Memory Switch Setting)

Receive Data Word Allocation (3rd Operand of PMCR)

None.

Measurement Condition Set (4000-series) (Sequence No. 431)

This sequence sets measurement conditions. Conditions to be set can be selected by setting Yes/No flags.

Send Data Word Allocation (2nd Operand of PMCR)

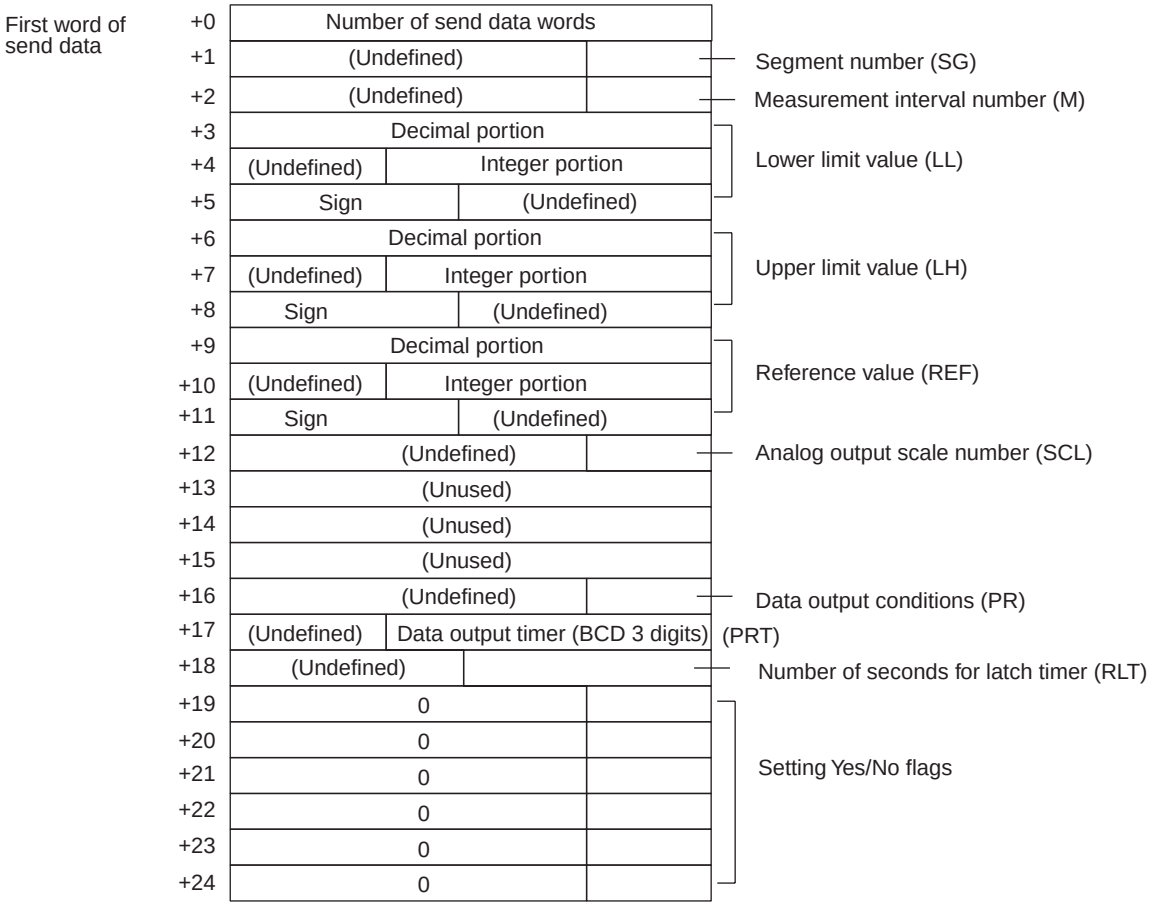

Offset	Contents (data format)	Data	
+0	Number of send data words (4 digits BCD)	0025 (fixed)	
+1	Segment number (1 digit BCD)	1 to 5	
+2	Measurement interval number (1 digit BCD)	1 to 7	
+3	Lower limit value (Decimal portion) (4 digits BCD)	0000 to 9999	**Example** –123.4567 +3 4 5 6 7 +4 0 1 2 3 +5 2 D 0 0
+4	Lower limit value (integer portion) (3 digits BCD)	000 to 999	
+5	Lower limit value (Sign) (ASCII 1 character)	If +: 20 (‘ ’) If – : 2D (‘–’)	
+6 to +8	Upper limit value	Same as lower limit value	
+9 to +11	Reference value	Same as lower limit value	
+12	Analog output scale number (1 digit BCD)	0 to 3	
+13 to +15	Unused		
+16	Data output conditions (1 digit BCD)	0 to 6	
+17	Data output timer value (3 digits BCD)	000 to 999	
+18	Number of seconds for latch timer (2 digits BCD)	00 to 99	
+19	Yes/No for segment setting (1 digit BCD)	Set: 1(SG) Don’t set: 0	
+20	Yes/No for measurement interval number setting (1 digit BCD)	Set: 1(M) Don’t set: 0	
+21	Yes/No for upper/lower limit value setting (1 digit BCD)	Set: 1(LL, LH) Don’t set: 0	
+22	Yes/No for reference setting (1 digit BCD)	Set: 1(REF, SCL) Don’t set: 0	
+23	Yes/No for data output condition setting (1 digit BCD)	Set: 1(PR, PRT) Don’t set: 0	
+24	Yes/No for latch timer setting (1 digit BCD)	Set: 1(RLT) Don’t set: 0	

Receive Data Word Allocation (3rd Operand of PMCR)

None.

Note 1. The following settings must be made together with this sequence; they cannot be set separately.
Lower limit, upper limit
Reference value, data output timer
Data output conditions, scheduled print timer

2. The limit value and reference value can be set to 3 digits for the integer portion and to 4 digits for the decimal portion.

Measurement Condition Release (4000-series) (Sequence No. 432)

This sequence clears the measurement conditions that have been set.

Send Data Word Allocation (2nd Operand of PMCR)

The send data word allocation is similar to that of sequence No. 431 (Measurement Condition Setting). However, only the setting Yes/No flags at +19 to +24 from the send data leading word can be used.

Receive Data Word Allocation (3rd Operand of PMCR)

None.

Note
1. The following conditions are used when the measurement conditions are released: Segment becomes 1 and the measurement interval becomes 1.
2. The following settings cannot be cleared separately using this sequence. They all must be cleared at the same time.
   Lower limit, Upper limit
   Data output conditions, Scheduled print timer
   The scale (SCL) and data output timer (PRT) cannot be cleared.
3. This sequence can be used for the 3Z4L-4000 Series only when pin 8 on DIP switch SW2 is turned ON.

Measurement Condition List Request (4000-series) (Sequence No. 433)

This sequence requests the measurement condition settings that have been set and other settings.

Send Data Word Allocation (2nd Operand of PMCR)

None.

Receive Data Word Allocation (3rd Operand of PMCR)

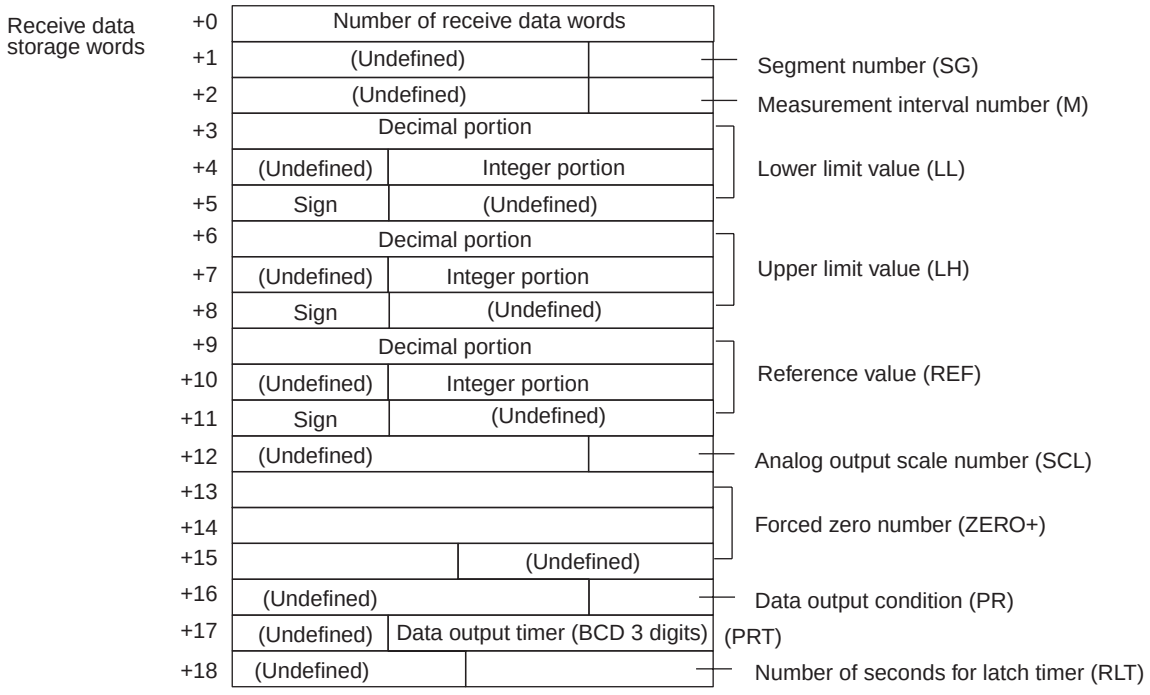

Offset	Contents (data format)	Data	
+0	Number of receive data words (4 digits BCD)	0019 (fixed)	
+1	Segment number (1 digit BCD)	1 to 5	
+2	Measurement interval number (1 digit BCD)	1 to 7	
+3	Lower limit value (Decimal portion) (4 digits BCD)	0000 to 9999	**Example** –123.4567 +3: 4 5 6 7 +4: 0 1 2 3 +5: F 0 0 0
+4	Lower limit value (Integer portion) (3 digits BCD)	000 to 999	
+5	Lower limit value (Sign) (BIN)	If +: 0 If –: F	
+6 to +8	Upper limit value	Same as lower limit value	
+9 to +11	Reference value	Same as lower limit value	
+12	Analog output scale number (1 digit BCD)	0 to 3	
+13 to +15	Forced zero number (ASCII 5 characters)	5A45524F2B (“ZERO+”) 4E4F524D20 (“NORM ”) 5A45524F2D (“ZERO–”)	
+16	Data output condition (1 digit BCD)	0 to 6	
+17	Data output timer value (3 digits BCD)	000 to 999	
+18	Number of seconds for latch timer (2 digits BCD)	00 to 99	

Note This sequence can be used for the 3Z4L-4000 Series only when pin 8 on DIP switch SW2 is turned ON.

Single Run Measurement Start (4000-series) (Sequence No. 434)

When the sample measurement condition is from 1 to 999, this sequence performs a single run measurement and requests the measurement results.

Send Data Word Allocation (2nd Operand of PMCR)

None.

Receive Data Word Allocation (3rd Operand of PMCR)

Receive data storage words				
	+0	Number of receive data words		
	+1	Decision result		
	+2	Decimal portion		Measurement value
	+3	(Undefined)	Integer portion	
	+4	Sign	(Undefined)	
	+5	Decimal portion		Deviation value
	+6	(Undefined)	Integer portion	
	+7	Sign	(Undefined)	

Offset	Contents (data format)	Data	
+0	Number of receive data words (4 digits BCD)	With no reference setting: 0005 With reference setting: 0008	
+1	Decision result (ASCII 2 characters)	With no limit setting: 0000 With limit setting: 2B4E (“+N”), 4F4B (“OK”), 2D4E (“–N”)	
+2	Measurement value (decimal portion) (4 digits BCD)	0000 to 9999	**Example** –123.4567 +2 4 5 6 7 +3 0 1 2 3 +4 F 0 0 0
+3	Measurement value (integer portion) (3 digits BCD)	000 to 999	
+4	Measurement value (Sign) (BIN)	If +: 0 If –: F	
+5 to +7	Deviation value	Same as measurement value *The deviation will be stored in this area only when reference setting is made.	

Deflection Measurement Start (4000-series) (Sequence No. 435)

This sequence starts a deflection measurement.

Send Data Word Allocation (2nd Operand of PMCR)

None.

Receive Data Word Allocation (3rd Operand of PMCR)

None.

Note The deflection measurement keeps measuring until sequence No. 438 (Measurement Termination) is executed.

Continuous Measurement Start (Scan) (4000-series) (Sequence No. 436)

This sequence starts a continuous measurement. The scan notification method is used for the receive data.

Send Data Word Allocation (2nd Operand of PMCR)

None.

Receive Data Word Allocation (3rd Operand of PMCR)

The receive data word allocation is similar to that of sequence No. 434 (Single Run Measurement Start).

Note 1. Since this sequence repeats itself within the sequence, once it is executed, it remains in the execution state until cancelled.

2. Even if execution is cancelled, the Laser Micrometer still keeps measuring. Execute sequence No. 438 (Measurement Termination) to end the sequence.

Continuous Measurement Start (Interrupt) (4000-series) (Sequence No. 437)

This sequence starts a continuous measurement. The interrupt notification method is used for the receive data and the interrupt No. is 101.

Send Data Word Allocation (2nd Operand of PMCR)

None.

Receive Data Word Allocation (3rd Operand of PMCR)

The receive data word allocation is similar to that of sequence No. 434 (Single Run Measurement Start).

Note 1. Since this sequence repeats itself within the sequence, once it is executed, it remains in the execution state until cancelled.

2. Even if execution is cancelled, the Laser Micrometer still keeps measuring. Execute sequence No. 438 (Measurement Termination) to end the sequence.

Continuous Measurement Termination (4000-series) (Sequence No. 438)

This sequence terminates continuous measurement.

Send Data Word Allocation (2nd Operand of PMCR)
None.

Receive Data Word Allocation (3rd Operand of PMCR)
For continuous measurement:None.

For Deflection Measurement
The receive data word allocation is similar to that of sequence No. 434 (Single Run Measurement Start).

Data Request (4000-series) (Sequence No. 439)

This sequence requests display data in the idle measurement status or latch data generated by the measurement command.

Send Data Word Allocation (2nd Operand of PMCR)
None.

Receive Data Word Allocation (3rd Operand of PMCR)
The receive data word allocation is similar to that of sequence No. 434 (Single Run Measurement Start).

Forced Positive Zero (4000-series) (Sequence No. 440)

This sequence sets the forced zero direction to positive (+)

Send Data Word Allocation (2nd Operand of PMCR)
None.

Receive Data Word Allocation (3rd Operand of PMCR)
None.

Forced Negative Zero (4000-series) (Sequence No. 441)

This sequence sets the forced zero direction to negative (–)

Send Data Word Allocation (2nd Operand of PMCR)
None.

Receive Data Word Allocation (3rd Operand of PMCR)
None.

Forced Zero Release (4000-series) (Sequence No. 442)

This sequence releases the forced zero direction.

Send Data Word Allocation (2nd Operand of PMCR)
None.

Receive Data Word Allocation (3rd Operand of PMCR)
None.

3Z4L Initialize (4000-series) (Sequence No. 443)

This sequence clears the 3Z4L, sets the mm unit, and sets memory switches.

Send Data Word Allocation (2nd Operand of PMCR)
The send data word allocation is similar to that of sequence No. 401 (Memory Switch Setting).

Receive Data Word Allocation (3rd Operand of PMCR)
None.

General-purpose Command 1 (4000-series) (Sequence No. 444)

This general-purpose command is used to send data with a specified data length, and receive back only OK. The terminator (CR) is automatically attached to the send data.

Send Data Word Allocation (2nd Operand of PMCR)

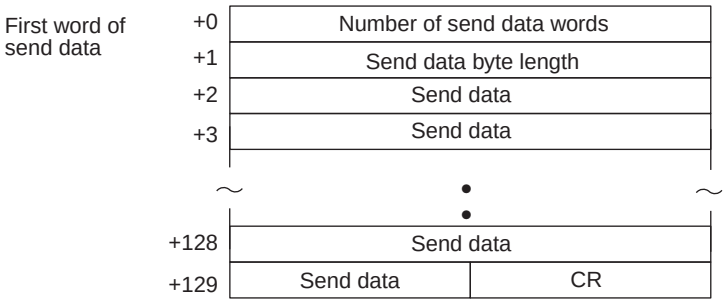

Offset	Contents (data format)	Data
+0	Number of send data words (4 digits BCD)	0003 to 0129
+1	Send data byte length (4 digits BCD)	0001 to 0255 The number of bytes of send data excluding the terminator (CR)
+2 to +129	Send data (ASCII)	Send data up to 255 bytes maximum Specify in ASCII.

Receive Data Word Allocation (3rd Operand of PMCR)

None.

General-purpose Command 2 (4000-series) (Sequence No. 445)

This general-purpose command is used to send data with a specified data length, and receive back receive data other than OK. The terminator (CR) is automatically attached to the send data.

Send Data Word Allocation (2nd Operand of PMCR)

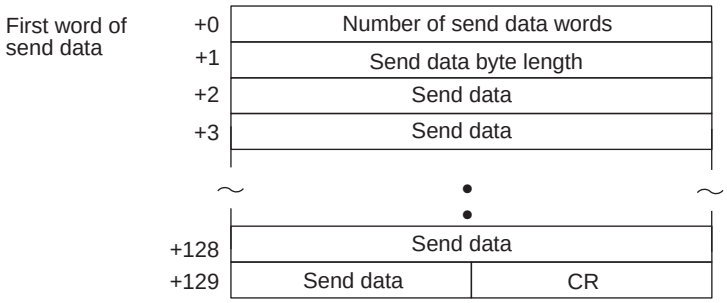

Offset	Contents (data format)	Data
+0	Number of send data words (4 digits BCD)	0003 to 0129
+1	Send data byte length (4 digits BCD)	0001 to 0255 The number of bytes of send data excluding the terminator (CR)
+2 to +129	Send data (ASCII)	Send data up to 255 bytes maximum Specify in ASCII.

Receive Data Word Allocation (3rd Operand of PMCR)

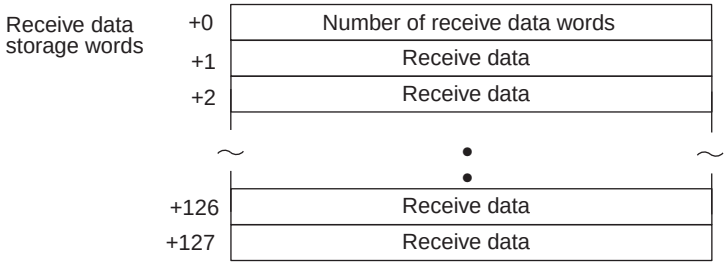

Offset	Contents (data format)	Data
+0	Number of receive data words (4 digits BCD)	0001 to 0128
+1 to +127	Receive data (ASCII)	When the receive data exceed 254 bytes, only 254 bytes are stored.

Appendix L

Visual Inspection System Protocol

The Visual Inspection System Protocol is used to make various settings or control remotely the Visual Recognition Device connected to the Serial Communications Board via RS-232C cable.

Protocol Configuration

The configuration of the Visual Inspection System Protocol is shown below.

Sequence No.	Communications sequence name	Function	Ladder interface	
			Send word allocation	Receive word allocation
450	Measurement execution (F200)	Carries out one measurement one and stores the measurement results in the specified words.	No	Yes
451	Continuous measurement execution (scan) (F200)	Carries out continuously setting the F200 and storing the measurement results in the specified words.	No	Yes
452	Continuous measurement execution (interrupt) (F200)	Carries out continuously setting the F200 and storing the measurement results in the specified words.	No	Yes
453	Reference object registration (group) (F200)	Performs reference position registration and evaluation criterion registration at the same time.	No	No
454	Reference object registration (reference position) (F200)	Registers the reference position for measuring the amount of position displacement when a position displacement compensation is used.	No	No
455	Reference object registration (evaluation criterion) (F200)	Registers the reference value to discriminate the output format.	No	No
456	Evaluation condition change (F200)	Changes the upper and lower limit values of the evaluation condition of the designated output No.	Yes	No
457	Arbitrary measurement value acquisition (F200)	Stores the measurement values of arbitrary measurement item regardless of output format in the specified words.	Yes	Yes
460	Measurement execution (F300)	Carries out one measurement and stores the measurement results in the specified words.	No	Yes
461	Continuous measurement execution (scan) (F300)	Carries out continuously setting the F300 and storing the measurement results in the specified words.	No	Yes
462	Continuous measurement execution (interrupt) (F300)	Carries out continuously setting the F300 and storing the measurement results in the specified words.	No	Yes
463	Reference object registration command 1 execution (F300)	Performs a measurement for the input image and updates the reference object data of the full window.	No	No
464	Reference object registration command 2 execution (F300)	Performs a measurement for the input image and updates the reference object data of the full window	Yes	No
465	Illumination fluctuation follow execution (F300)	Executes an illumination fluctuation follow.	No	No

Sequence No.	Communications sequence name	Function	Ladder interface	
			Send word allocation	Receive word allocation
470	Measurement execution and positioning (F350)	Carries out one measurement and stores the measurement results in the specified words.	No	Yes
471	Camera designation and positioning (F350)	Designates the camera for measurement.	Yes	No
472	Scene switching and positioning (F350)	Switches to a designated scene No.	Yes	No
473	Inspection execution and character inspection (F350)	Carries out one inspection and outputs inspection results to the video monitor.	No	No
474	Character string inspection and character inspection (F350)	Changes the inspection character string of a designated inspection area No. to a designated character string.	Yes	No
480	Camera change (decrease by 1) (F200/300)	Decreases the display camera No. by 1.	No	No
481	Camera change (increase by 1) (F200/300)	Increases the display camera No. by 1.	No	No
482	Binary level modification (F200/300)	Modifies the binary levels (upper limit and lower limit values) of a designated window number No.	Yes	No
483	Reset (F200/300)	Resets the F200/F300.	No	No
490	Scene switch (decrease by 1)	Decreases the scene No. by 1.	No	No
491	Scene switch (increase by 1)	Increases the scene No. by 1.	No	No
492	Scene switch (arbitrary)	Switches to a designated scene No.	Yes	No
493	Measurement, inspection termination	Terminates the measurement and returns to the home menu.	No	No
494	General-purpose command (send)	Sets and executes commands that are otherwise not supported.	Yes	No
495	General-purpose command (send/receive)	Sets and executes commands that are otherwise not supported.	Yes	Yes

Note Ladder Interface Settings

YES: User settings are required for the 2nd and 3rd operands of PMCR.

NO: Send word allocation: Set a dummy word address for the 3rd operand (D).
Receive word allocation: Set the constant 0000 for the 2rd operand (S).

Connections

The connections for using the Visual Inspection System Protocol are shown below.

RS-232C Connections

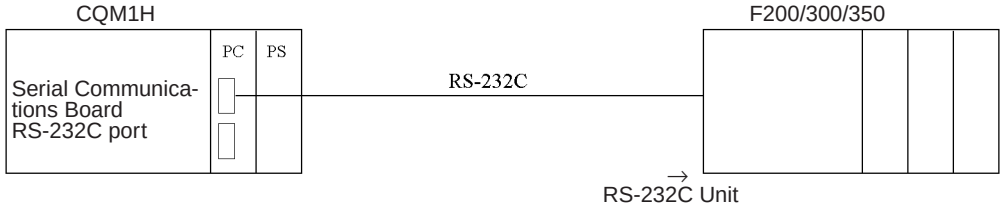

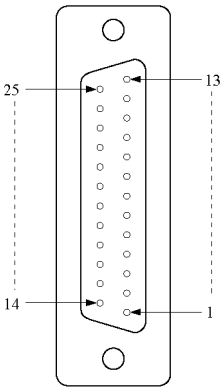

Pin No.	Signal name	Abbreviation
1	Protective ground or earth	FG (GND)
2	Send data	SD (TXD)
3	Receive data	RD (RXD)
4	Request to send	RS (RTS)
5	Clear to send	CS (CTS)
6	Data set ready	DR (DSR)
7	Signal ground	SG (GND)
8	Carrier detection (Data word receive)	CD (DCD)
20	Data terminal ready	ER (DTR)

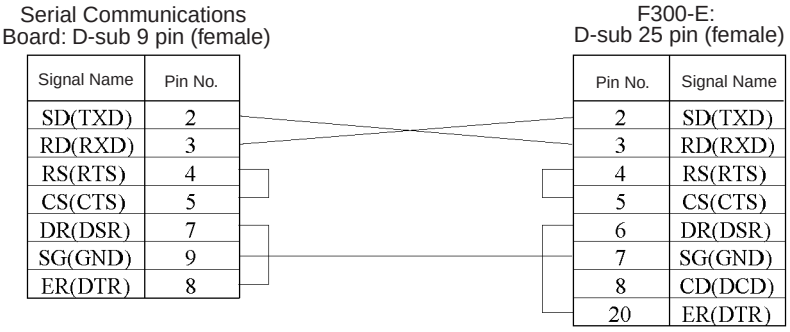

- **For RS/CS Flow Control**

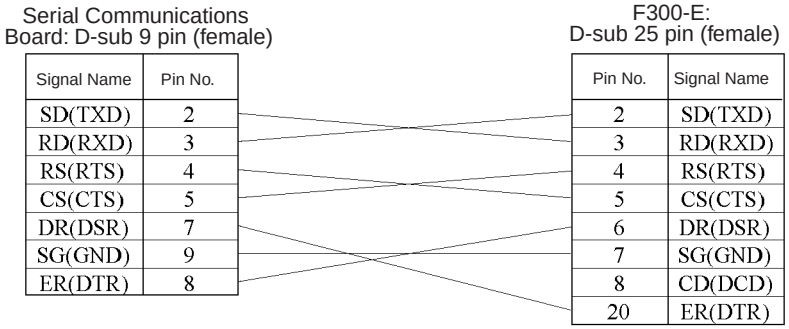

Measurement Execution (F200) (Sequence No. 450)

This sequence carries out one measurement and stores the measurement results in the specified words.

Send Data Word Allocation (2nd Operand of PMCR)

None.

Receive Data Word Allocation (3rd Operand of PMCR)

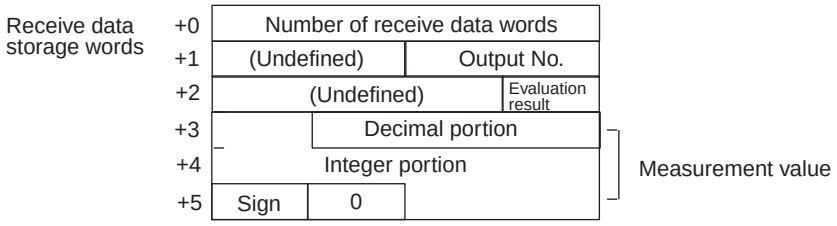

Offset	Content (data format)	Data
+0	Number of receive data words (4 digits BCD)	0006
+1	Output No. (2 digits BCD)	00 to 07
+2	Evaluation result (1 digit BCD)	0: OK 1: NG
+3 to +5	Measurement value (decimal portion) (3 digits BCD) Measurement value (integer portion) (7 digits BCD) Measurement value (sign) (1 digit)	**Example** –123.456 +3: 3456 +4: 0012 +5: F000 **Example** +123.456 +3: 3456 +4: 0012 +5: 0000 F is stored for negative values.

Note 1. Only one output No. can be stored.

2. The ranges of measurement values are as follows:
For calibration OFF setting: –2147483.648 to 2147483.647
For calibration ON setting: –9999999.999 to 9999999.999

3. If a measurement value exceeds the range of measurement values when calibration is turned off, undefined data is stored in the specified words.

Continuous Measurement Execution (Scan) (F200) (Sequence No. 451)

This sequence carries out continuously the setting of the F200 and stores measurement results in the specified words. The scan notification method is used for the receive data.

Send Data Word Allocation (2nd Operand of PMCR)

None.

Receive Data Word Allocation (3rd Operand of PMCR)

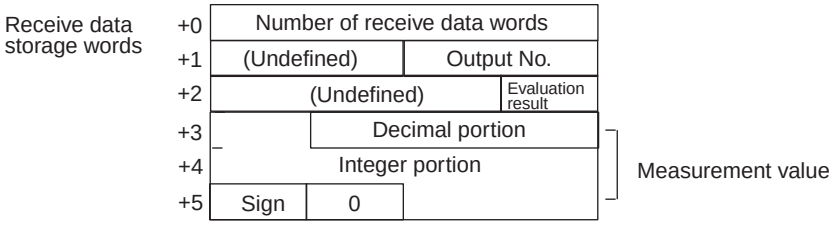

Offset	Content (data format)	Data
+0	Number of receive data words (4 digits BCD)	0006
+1	Output No. (2 digits BCD)	00 to 07
+2	Evaluation result (1 digit BCD)	0: OK 1: NG
+3 to +5	Measurement value (decimal portion) (3 digits BCD) Measurement value (integer portion) (7 digits BCD) Measurement value (sign) (1 digit)	**Example** –123.456 +3: 3456 +4: 0012 +5: F000 **Example** +123.456 +3: 3456 +4: 0012 +5: 0000 F is stored for negative values.

Note 1. Only one output No. can be designated.
2. Turn OFF CIO 28911 (if port A is used) or CIO 28915 (if port B is used) to terminate this sequence.
3. The ranges of measurement values are as follows:
For calibration OFF setting : –2147483.648 to 2147483.647
For calibration ON setting : –9999999.999 to 9999999.999
4. If a measurement value exceeds the range of measurement values when calibration is turned off, undefined data is stored in the specified words.

Continuous Measurement Execution (Interrupt) (F200) (Sequence No. 452)

This sequence carries out continuously setting the F200 and stores measurement results in the specified words. The interrupt notification method is used for the receive data. The interrupt No. is 102.

Send Data Word Allocation (2nd Operand of PMCR)

None.

Receive Data Word Allocation (3rd Operand of PMCR)

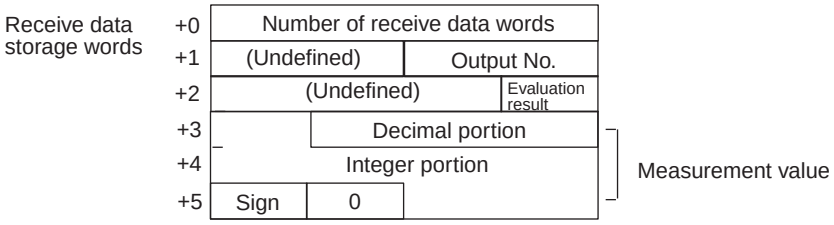

Offset	Content (data format)	Data
+0	Number of receive data words (4 digits BCD)	0006
+1	Output No. (2 digits BCD)	00 to 07
+2	Evaluation result (1 digit BCD)	0: OK 1: NG
+3 to +5	Measurement value (decimal portion) (3 digits BCD) Measurement value (integer portion) (7 digits BCD) Measurement value (sign) (1 digit)	**Example** –123.456 +3: 3456 +4: 0012 +5: F000 **Example** +123.456 +3: 3456 +4: 0012 +5: 0000 F is stored for negative values.

Note 1. Only one output No. can be designated.
2. Turn OFF CIO 28911 (if port A is used) or CIO 28915 (if port B is used) to terminate this sequence.

3. The ranges of measurement values are as follows:
   For calibration OFF setting: –2147483.648 to 2147483.647
   For calibration ON setting: –9999999.999 to 9999999.999
4. If a measurement value exceeds the range of measurement values when calibration is turned off, undefined data is stored in the specified words.

Reference Object Registration (Group) (F200) (Sequence No. 453)

This sequence performs reference position registration and criterion registration at the same time.

Send Data Word Allocation (2nd Operand of PMCR)

None.

Receive Data Word Allocation (3rd Operand of PMCR)

None.

Reference Object Registration (Reference Position) (F200) (Sequence No. 454)

This sequence registers the reference position for measuring the amount of position displacement when a position displacement compensation is used.

Send Data Word Allocation (2nd Operand of PMCR)

None.

Receive Data Word Allocation (3rd Operand of PMCR)

None.

Reference Object Registration (Criterion) (F200) (Sequence No. 455)

This sequence registers a reference value to discriminate the output format.

Send Data Word Allocation (2nd Operand of PMCR)

None.

Receive Data Word Allocation (3rd Operand of PMCR)

None.

Evaluation Condition Change (F200) (Sequence No. 456)

This sequence changes the upper and lower limit values of evaluation condition of the designated output No.

Send Data Word Allocation (2nd Operand of PMCR)

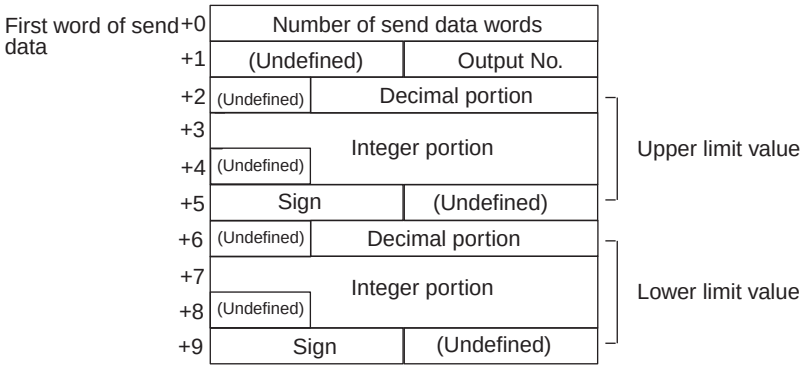

Offset	Content (data format)	Data
+0	Number of send data words (4 digits BCD)	0010
+1	Output No. (2 digits BCD)	00 to 07
+2 to +5	Upper limit value (decimal portion) (3 digits BCD) Upper limit value (integer portion) (7 digits BCD) Upper limit value (sign) (ASCII 2 digits)	**Example** –123.456 +2: 0567 +3: 1234 +4: 0000 +5: 2D00 **Example** +123.456 +2: 0678 +3: 2345 +4: 0001 +5: 3000
+6 to +9	Lower limit value (decimal portion) (3 digits BCD) Lower limit value (integer portion) (7 digits BCD) Lower limit value (sign) (ASCII 2 digits)	Same as upper limit.

Receive Data Word Allocation (3rd Operand of PMCR)

None.

Note 1. Only one output No. can be designated.
2. Enter values so that upper limit ≥ lower limit.
3. Enter upper limit and lower limit values within the range –2147483.648 to 2147483.648.

Arbitrary Measurement Value Acquisition (F200) (Sequence No. 457)

This sequence stores measurement values of arbitrary measurement items regardless of output format in the specified words.

Send Data Word Allocation (2nd Operand of PMCR)

First word of send data	+0	Number of send data words	
	+1	(Undefined)	Data 1
	+2	(Undefined)	Data 2

Offset	Content (data format)	Data
+0	Number of send data words (4 digits BCD)	0003
+1	Data 1 (2 digits BCD)	00: Area 01: Center of gravity x 02: Center of gravity y 03: Main axis angle 04: Output format 05: Reference value of output format 06: X displacement 07: Y displacement 08: Angle displacement 09: X reference position 10: Y reference position 11: Angle reference position
+2	Data 2 (2 digits BCD)	When 00 to 03 is set to data 1 Window No.:00 to 07 When 04 to 05 is set to data 1 Output No.:00 to 07 When 06 to 11 is set to data 1 Camera No.:00 to 01

Receive Data Word Allocation (3rd Operand of PMCR)

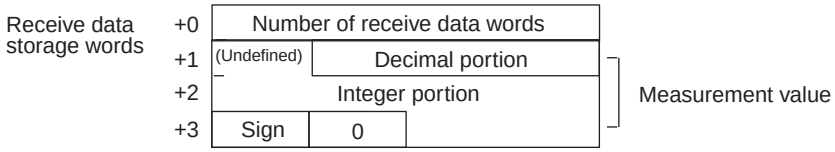

Offset	Content (data format)	Data
+0	Number of receive data words (4 digits BCD)	0004
+1 to +3	Measurement value (decimal portion) (3 digits BCD) Measurement value (integer portion) (7 digits BCD) Measurement value (sign) (1 digit)	**Example** –123.456 +3: 3456 +4: 0012 +5: F000 **Example** +123.456 +3: 3456 +4: 0012 +5: 0000 F is stored for negative values.

Note
1. Only one output No. can be designated.
2. Measurement is not performed with this command. The measurement results of the last measurement will be stored in the specified words.
3. This command can acquire only the measurement value of the window No. set by output format.
4. For data 1 and 2 , the receive data is compared with the send data. If the receive data is not the same as the send data, CIO 28909 (if port A is used) or CIO 28913 (if port B is used) will turn ON.
5. The ranges of measurement values are as follows:
   For calibration OFF setting: –2147483.648 to 2147483.647
   For calibration ON setting: –9999999.999 to 9999999.999
6. If a measurement value exceeds the range of measurement values when calibration is turned off, unexpected data is stored in the specified words.

Measurement Execution (F300) (Sequence No. 460)

This sequence carries out one measurement and stores measurement results in the specified words

Send Data Word Allocation (2nd Operand of PMCR)

None.

Receive Data Word Allocation (3rd Operand of PMCR)

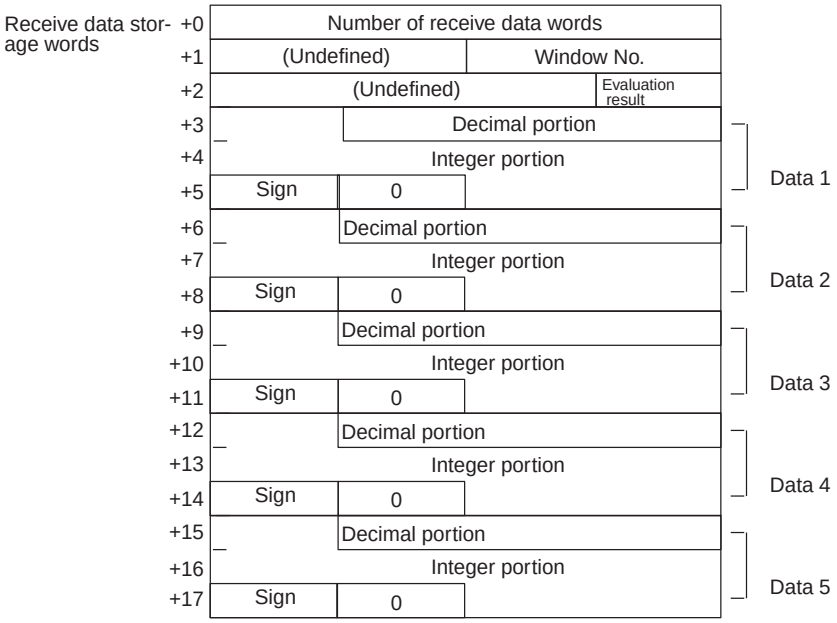

Offset	Content (data format)	Data
+0	Number of receive data words (4 digits BCD)	0006: 1 measurement item 0009: 2 measurement items 0012: 3 measurement items 0015: 4 measurement items 0018: 5 measurement items
+1	Window number (2 digits BCD)	00 to 07
+2	Evaluation result (1 digit BCD)	0:OK 1:NG
+3 to +5	Measurement value (decimal portion) (3 digits BCD) Measurement value (integer portion) (7 digits BCD) Measurement value (sign) (1 digit)	**Example** –123.456 +3: 3456 +4: 0012 +5: F000 **Example** +123.456 +3: 3456 +4: 0012 +5: 0000 F is stored for negative values.
+6 to +8	Same as +3 to +5.	Same as +3 to +5.
+9 to +11	Same as +3 to +5.	Same as +3 to +5.
+12 to +14	Same as +3 to +5.	Same as +3 to +5.
+15 to +17	Same as +3 to +5.	Same as +3 to +5.

Note
1. Exponential expressions are used for numbers larger than 9999999.999 and smaller than –999999.9.
2. The number of measurement items is up to 5, but only one window number can be read.
3. The ranges of measurement values are as follows:
   For calibration OFF setting: –2147483.648 to 2147483.648
   For calibration ON setting: –9999999.999 to 9999999.999
4. The priority of measurement items being output are as follows:
   Area
   Center of gravity X, Center of gravity Y
   Displacement in center of gravity X (reserved), displacement in center of gravity Y (reserved)
   Main axis angle
   Main axis angle aberration (reserved)
   Edge angle
   Edge angle (reserved)
   Center X, center Y
   Center X aberration (reserved), center Y aberration (reserved)
   Inclination
   Inclination aberration (reserved)
   Intersecting point X, intersecting point Y
   Intersecting point X aberration (reserved), intersecting point Y aberration (reserved)

Continuous Measurement Execution (Scan) (F300) (Sequence No. 461)

This sequence carries out continuously the settings of F300 and stores measurement results in the specified words.

Send Data Word Allocation (2nd Operand of PMCR)

None.

Receive Data Word Allocation (3rd Operand of PMCR)

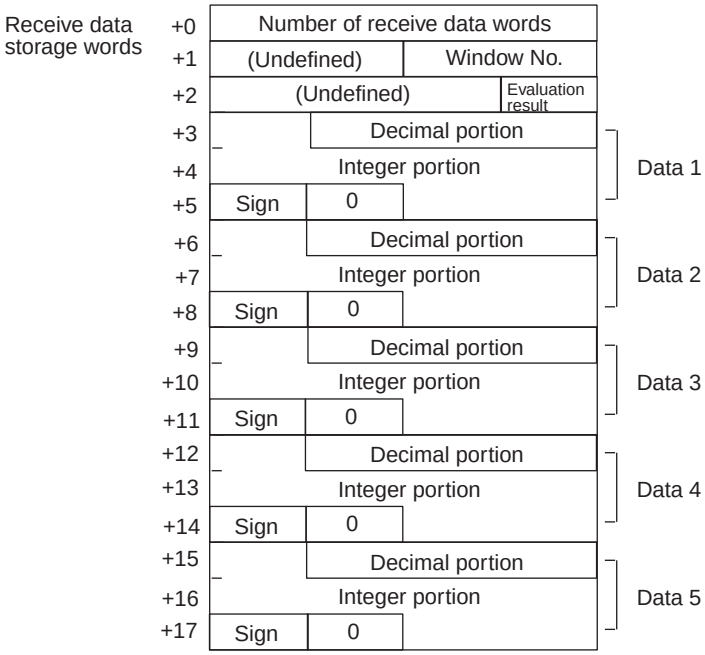

Offset	Content (data format)	Data
+0	Number of receive data words (4 digits BCD)	0006: 1 measurement item 0009: 2 measurement items 0012: 3 measurement items 0015: 4 measurement items 0018: 5 measurement items
+1	Window No. (2 digits BCD)	00 to 07
+2	Evaluation result (1 digit BCD)	0: OK 1: NG
+3 to +5	Measurement value (decimal portion) (3 digits BCD) Measurement value (integer portion) (7 digits BCD) Measurement value (sign) (1 digit)	**Example** –123.456 +3: 3456 +4: 0012 +5: F000 **Example** +123.456 +3: 3456 +4: 0012 +5: 0000 F is stored for negative values.
+6 to +8	Same as +3 to +5.	Same as +3 to +5.
+9 to +11	Same as +3 to +5.	Same as +3 to +5.
+12 to +14	Same as +3 to +5.	Same as +3 to +5.
+15 to +17	Same as +3 to +5.	Same as +3 to +5.

Note 1. Exponential expressions are used for numbers larger than 9999999.999 and smaller than –999999.9.

2. The number of measurement items are up to 5, but only one window number can be read.

3. The range of measurement values are as follows:
For calibration OFF setting: –2147483.648 to 2147483.648
For calibration ON setting: –9999999.999 to 9999999.999

4. The priority order of measurement items being output are as follows:
Area
Center of gravity X, Center of gravity Y
Displacement in center of gravity X (reserved), displacement in center of gravity Y (reserved)

Main axis angle
Main axis angle aberration (reserved)
Edge angle
Edge angle (reserved)
Center X, center Y
Center X displacement (reserved), center Y displacement (reserved)
Inclination
Inclination displacement (reserved)
Intersecting point X, intersecting point Y
Intersecting point X displacement (reserved), intersecting point Y displacement (reserved)

Continuous Measurement Execution (Interrupt) (F300) (Sequence No. 462)

This sequence carries out continuously setting the F300 and stores measurement results in the specified words. The interrupt notification method is used for the receive data. The interrupt No. is 102.

Send Data Word Allocation (2nd Operand of PMCR)

None.

Receive Data Word Allocation (3rd Operand of PMCR)

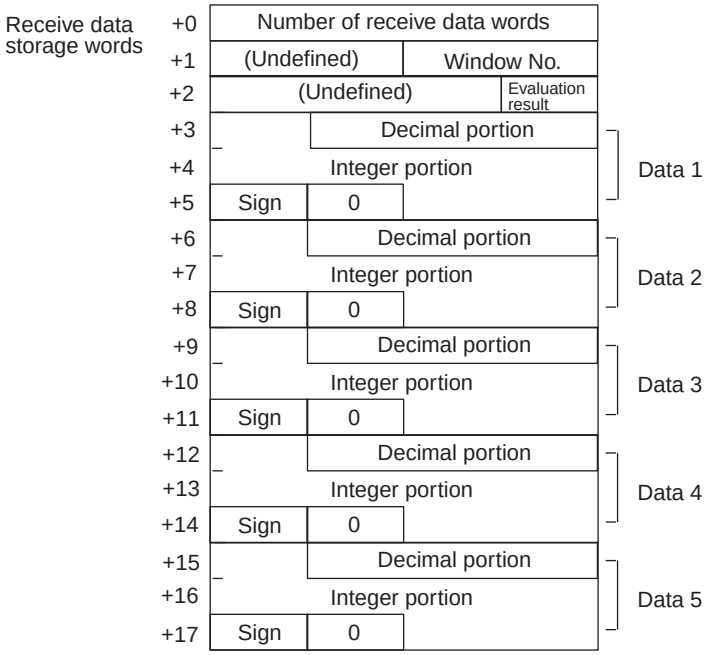

Offset	Content (data format)	Data
+0	Number of receive data words (4 digits BCD)	0006: 1 measurement item 0009: 2 measurement items 0012: 3 measurement items 0015: 4 measurement items 0018: 5 measurement items
+1	Window No. (2 digits BCD)	00 to 07
+2	Evaluation result (1 digit BCD)	0: OK 1: NG
+3 to +5	Measurement value (decimal portion) (3 digits BCD) Measurement value (integer portion) (7 digits BCD) Measurement value (sign) (1 digit)	**Example** –123.456 +3: 3456 +4: 0012 +5: F000 **Example** +123.456 +3: 3456 +4: 0012 +5: 0000 F is stored for negative values.
+6 to +8	Same as +3 to +5.	Same as +3 to +5.
+9 to +11	Same as +3 to +5.	Same as +3 to +5.
+12 to +14	Same as +3 to +5.	Same as +3 to +5.
+15 to +17	Same as +3 to +5.	Same as +3 to +5.

Note 1. Exponential expressions are used for numbers larger than 9999999.999 and smaller than –999999.9.

2. The number of measurement items is up to 5, but only one window number can be read.

3. The ranges of measurement values are as follows:
For calibration OFF setting: –2147483.648 to 2147483.648
For calibration ON setting: –9999999.999 to 9999999.999

4. The priority of measurement items being output are as follows:
Area
Center of gravity X, Center of gravity Y
Displacement in center of gravity X (reserved), displacement in center of gravity Y (reserved)
Main axis angle
Main axis angle displacement (reserved)
Edge angle
Edge angle(reserved)
Center X, center Y
Center X displacement (reserved), center Y displacement (reserved)
Inclination
Inclination displacement (reserved)
Intersecting point X, intersecting point Y
Intersecting point X displacement (reserved), intersecting point Y displacement (reserved)

Reference Object Registration Command 1 Execution (F300) (Sequence No. 463)

This sequence performs a measurement for the input image and updates reference object data of the full window.

Send Data Word Allocation (2nd Operand of PMCR)

None.

Receive Data Word Allocation (3rd Operand of PMCR)

None.

Reference Object Registration Command 2 Execution (F300) (Sequence No. 464)

This sequence performs a measurement for the input image and updates the reference object data of a designated window.

Send Data Word Allocation (2nd Operand of PMCR)

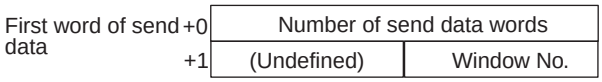

Offset	Contents (data format)	Data
+0	Number of send data words (4 digits BCD)	0002
+1	Window No. (2 digits BCD)	00 to 07

Receive Data Word Allocation (3rd Operand of PMCR)

None.

Illumination Fluctuation Follow Execution (F300) (Sequence No. 465)

This sequence executes an illumination fluctuation follow.

Send Data Word Allocation (2nd Operand of PMCR)

None.

Receive Data Word Allocation (3rd Operand of PMCR)

None.

Measurement Execution and Positioning (F350) (Sequence No. 470)

This sequence carries out one measurement and stores the measurement results in the specified words.

Send Data Word Allocation (2nd Operand of PMCR)

None.

Receive Data Word Allocation (3rd Operand of PMCR)

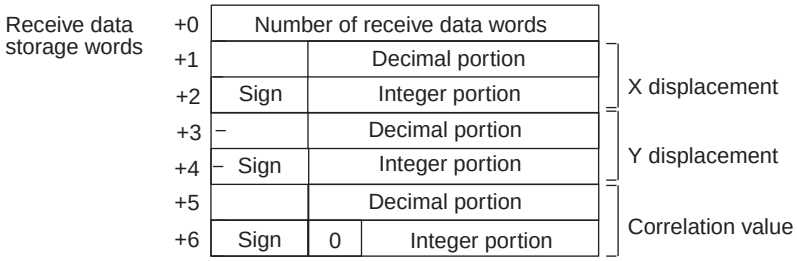

Offset	Content (data format)	Data
+0	Number of receive data words	0007
+1 to +2	X displacement (decimal portion) (3 digits BCD) X displacement (integer portion) (3 digits BCD) X displacement (sign) (1 digit) (See note.)	**Example** –123.456 +1: 3456 +2: F012 **Example** +123.456 +1: 3456 +2: 0012 F is stored for negative values.
+3 to +4	Y displacement (decimal portion) (3 digits BCD) Y displacement (integer portion) (3 digits BCD) Y displacement (sign) (1 digit) (See note.)	**Example** –123.456 +1: 3456 +2: F012 **Example** +123.456 +1: 3456 +2: 0012 F is stored for negative values.
+5 to +6	Correlation value (decimal portion) (3 digits BCD) Correlation value (integer portion) (3 digits BCD) Correlation value (sign) (1 digit) (See note.)	**Example** –12.345 +1: 2345 +2: F001 **Example** +12.345 +1: 2345 +2: 0001 F is stored for negative values.

Note 1. The number of models that can be stored in a designated word is 1.
2. If a measurement is carried out without executing a camera designation, a measurement is executed for all cameras in which the measurement model is registered.
3. When the correlation value is less than 70 and the measurement value overflows, CIO 28909 (if port A is used) or CIO 28913 (if port B is used) will turn ON.
4. Data to be output is within the range 999.999 (upper limit) to –999.999 (lower limit).
5. Retry processing is not performed for this sequence.
6. Turn the Abort Bit ON and then OFF to end this sequence.

Camera Designation and Positioning (F350) (Sequence No. 471)

This sequence designates the cameras for measurement.

Send Data Word Allocation (2nd Operand of PMCR)

First word of send data

+0	Number of send data words	
+1	(Undefined)	First camera No.
+2	(Undefined)	Last camera No.

Offset	Content (data format)	Data
+0	Number of send data words (4 digit BCD)	0003
+1	First camera No. (1 digit BCD)	0 to 7
+2	Last camera No. (1 digit BCD)	0 to 7

Receive Data Word Allocation (3rd Operand of PMCR)

None.

Note 1. Set values so that the first camera No.< last camera No.
2. If a designated camera No. is abnormal, CIO 28909 (if port A is used) or CIO 28913 (if port B is used) will turn ON.

Scene Switching and Positioning (F350) (Sequence No. 472)

This sequence switches to a designated scene No.

Send Data Word Allocation (2nd Operand of PMCR)

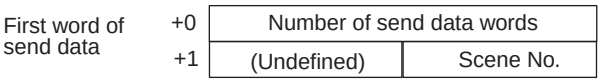

Offset	Contents (data format)	Data
+0	Number of send data words (4 digits BCD)	0002
+1	Scene No. (2 digits BCD)	00 to 15

Receive Data Word Allocation (3rd Operand of PMCR)

None.

Note 1. If a scene No. is abnormal, CIO 28909 (if port A is used) or CIO 28913 (if port B is used) will turn ON.
2. Retry processing is not performed for this sequence.
3. Turn the Abort Bit ON and then OFF to end this sequence.

Inspection Execution and Character Inspection (F350) (Sequence No. 473)

This sequence carries out one inspection and outputs the inspection results to a video monitor.

Send Data Word Allocation (2nd Operand of PMCR)

None.

Receive Data Word Allocation (3rd Operand of PMCR)

None.

Character String Inspection and Character Inspection (F350) (Sequence No. 474)

This sequence changes the inspection character string of a designated inspection area No. to a designated character string.

Send Data Word Allocation (2nd Operand of PMCR)

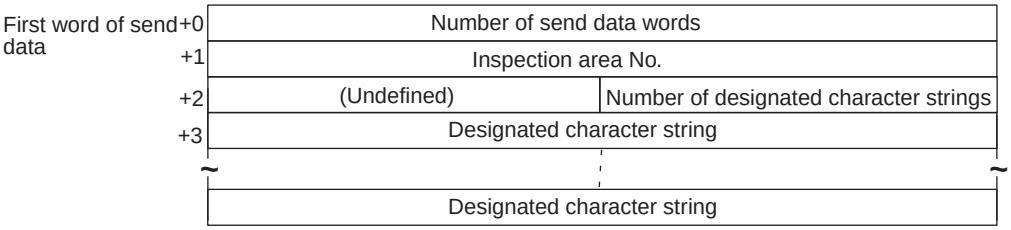

Offset	Contents (data format)	Data
+0	Number of send data words (4 digits BCD)	0004 to 0015
+1	Number of designated character strings (4 digits BCD)	0 to 24
+2	Inspection area No. (2 digits BCD)	00 to 07
+3 to	Number of designated character strings (ASCII)	

Receive Data Word Allocation (3rd Operand of PMCR)

None.

Camera Change (Decrease by 1) (F200/300) (Sequence No. 480)

This sequence decreases the display camera No. by 1.

Send Data Word Allocation (2nd Operand of PMCR)
None.

Receive Data Word Allocation (3rd Operand of PMCR)
None.

Camera Change (Increase by 1) (F200/300) (Sequence No. 481)

This sequence increases the display camera No. by 1.

Send Data Word Allocation (2nd Operand of PMCR)
None.

Receive Data Word Allocation (3rd Operand of PMCR)
None.

Binary Level Modification (F200/300) (Sequence No. 482)

This sequence modifies the binary levels (upper limit and lower limit values) of a designated output No. (F200) or window number No. (F300).

Send Data Word Allocation (2nd Operand of PMCR)

First word of send data	+0	Number of send data words	
	+1	(Undefined)	Window No. or Output No.
	+2	(Undefined)	Upper limit value
	+3	(Undefined)	Lower limit value

Offset	Contents (data format)	Data
+0	Number of send data words (4 digits BCD)	0004
+1	Window No. (1 digit BCD)	0 to 7
+2	Upper limit value (3 digits BCD)	000 to 255
+3	Lower limit value (3 digits BCD)	000 to 255

Receive Data Word Allocation (3rd Operand of PMCR)
None.

Note Enter values so that the upper limit ≥ lower limit.

Reset (F200/300) (Sequence No. 483)

This sequence resets the F200/F300 (to starting status).

Send Data Word Allocation (2nd Operand of PMCR)
None.

Receive Data Word Allocation (3rd Operand of PMCR)
None.

Scene Switching (Decrease by 1) (Sequence No. 490)

This sequence decreases the scene No. by 1.

Send Data Word Allocation (2nd Operand of PMCR)
None.

Receive Data Word Allocation (3rd Operand of PMCR)
None.

Scene Switching (Increase by 1) (Sequence No. 491)

This sequence increases the scene No. by 1.

Send Data Word Allocation (2nd Operand of PMCR)

None.

Receive Data Word Allocation (3rd Operand of PMCR)

None.

Scene Switching (Arbitrary) (Sequence No. 492)

This sequence switches to a designated scene No.

Send Data Word Allocation (2nd Operand of PMCR)

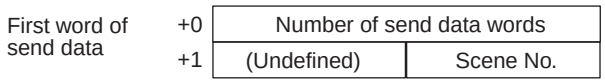

Offset	Contents (data format)	Data
+0	Number of send data words (4 digits BCD)	0002
+1	Scene No. (2 digits BCD)	00 to 15

Receive Data Word Allocation (3rd Operand of PMCR)

None.

Measurement, Inspection Termination (Sequence No. 493)

This sequence terminates the measurement and returns to the home menu.

Send Data Word Allocation (2nd Operand of PMCR)

None.

Receive Data Word Allocation (3rd Operand of PMCR)

None.

General-purpose Command (Send) (Sequence No. 494)

This sequence can set and execute commands that are not otherwise supported. The delimiter (CR+LF) is automatically attached to the send data.

Send Data Word Allocation (2nd Operand of PMCR)

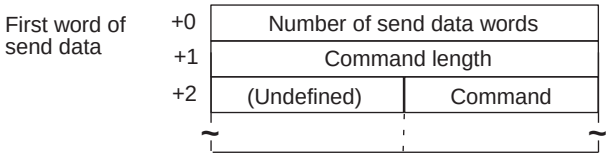

Offset	Contents (data format)	Data
+0	Number of send data words (4 digits BCD)	003 to 0129
+1	Command length (4 digits BCD)	0001 to 0253
+2 to	Command (ASCII)	Specify ASCII data.

Receive Data Word Allocation (3rd Operand of PMCR)

None.

Note 1. The processing depends on the command.

2. For a command with a response, use sequence #495.

General-purpose Command (Send/Receive) (Sequence No. 495)

This sequence can set and execute commands that are not otherwise supported. The delimiter (CR+LF) is automatically attached to the send data.

Send Data Word Allocation (2nd Operand of PMCR)

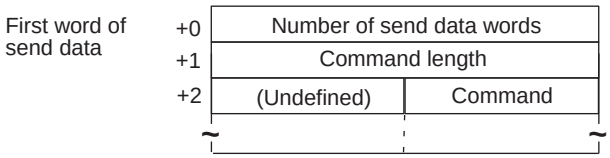

Offset	Contents (data format)	Data
+0	Number of send data words (4 digits BCD)	0003 to 0129
+1	Command length (4 digits BCD)	0001 to 0253
+2 to	Command (ASCII)	Specify ASCII data.

Receive Data Word Allocation (3rd Operand of PMCR)

The reception data is stored in the reception data words without the delimiter (CR+LF),

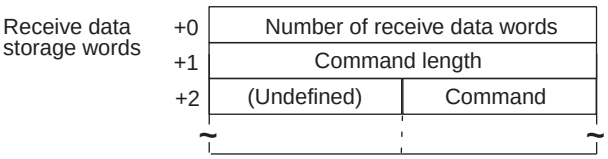

Offset	Contents (data format)	Data
+0	Number of receive data words (4 digits BCD)	
+1	Command length (4 digits BCD)	
+2 to	Command (ASCII)	ASCII data is returned.

Note 1. The processing depends on the command.
2. For a command with a response, use sequence #495.

Appendix M

V600/V620 ID Controller Protocol

The V600/V620 ID Controller Protocol is used to make various settings or control remotely the ID Controller Connected to the Serial Communications Board via RS-232C or RS-422A cable.

Protocol Configuration

The configuration of the V600/V620 ID Controller Protocol is shown below.

Sequence No.	Communications sequence name	Function	Ladder interface	
			Send word allocation	Receive word allocation
500	Read (ASCII/1)	Used when the number of Heads to be read from the Carrier is 1.	Yes	Yes
501	Read (ASCII/2)	Used when the number of Heads to be read from the Carrier is 2.	Yes	Yes
502	Read (ASCII/4)	Used when the maximum number of Heads to be read from the Carrier is 4.	Yes	Yes
503	Read (ASCII/8)	Used when the maximum number of Heads to be read from the Carrier is 8.	Yes	Yes
504	Read (Hexadecimal/1)	Used when the number of Heads to be read from the Carrier is 1.	Yes	Yes
505	Read (Hexadecimal/2)	Used when the number of Heads to be read from the Carrier is 2.	Yes	Yes
506	Read (Hexadecimal/4)	Used when the maximum number of Heads to be read from the Carrier is 4.	Yes	Yes
507	Read (Hexadecimal/8)	Used when the maximum number of Heads to be read from the Carrier is 8.	Yes	Yes
508	Auto-read (ASCII/1)	Used when the number of Heads to be read from the Carrier is 1.	Yes	Yes
509	Auto-read (Hexadecimal/1)	Used when the number of Heads to be read from the Carrier is 1.	Yes	Yes
510	Polling Auto-read (ASCII)	Used when the number of Heads to be read from the Carrier is from 1 to 8.	Yes	No
511	Polling Auto-read Subcommand (ASCII/2)	Used when the number of Heads to be read from the Carrier is 2.	Yes	Yes
512	Polling Auto-read Subcommand (ASCII/4)	Used when the maximum number of Heads to be read from the Carrier is 4.	Yes	Yes
513	Polling Auto-read Subcommand (ASCII/8)	Used when the maximum number of Heads to be read from the Carrier is 8.	Yes	Yes
514	Polling Auto-read (Hexadecimal)	Used when the number of Heads to be read from the Carrier is from 1 to 8.	Yes	No
515	Polling Auto-read Subcommand (Hexadecimal/2)	Used when the number of Heads to be read from the Carrier is 2.	Yes	Yes
516	Polling Auto-read Subcommand (Hexadecimal/4)	Used when the maximum number of Heads to be read from the Carrier is 4.	Yes	Yes
517	Polling Auto-read Subcommand (Hexadecimal/8)	Used when the maximum number of Heads to be read from the Carrier is 8.	Yes	Yes

Sequence No.	Communications sequence name	Function	Ladder interface	
			Send word allocation	Receive word allocation
518	Write (ASCII/1)	Used when the number of Heads to be written to the Carrier is 1.	Yes	No
519	Write (ASCII/2)	Used when the number of Heads to be written to the Carrier is 2.	Yes	No
520	Write (ASCII/4)	Used when the maximum number of Heads to be written to the Carrier is 4.	Yes	No
521	Write (ASCII/8)	Used when the maximum number of Heads to be written to the Carrier is 8.	Yes	No
522	Write (Hexadecimal/1)	Used when the number of Heads to be written to the Carrier is 1.	Yes	No
523	Write (Hexadecimal/2)	Used when the number of Heads to be written to the Carrier is 2.	Yes	No
524	Write (Hexadecimal/4)	Used when the maximum number of Heads to be written to the Carrier is 4.	Yes	No
525	Write (Hexadecimal/8)	Used when the maximum number of Heads to be written to the Carrier is 8.	Yes	No
526	Auto-write (ASCII/1)	Used when the number of Heads to be written to the Carrier is 1.	Yes	No
527	Auto-write (Hexadecimal/1)	Used when the number of Heads to be written to the Carrier is 1.	Yes	No
528	Polling Auto-write (ASCII/2)	Used when the number of Heads to be written to the Carrier is 2.	Yes	No
529	Polling Auto-write Subcommand (ASCII/2)	Used when the number of Heads to be written to the Carrier is 2.	Yes	No
530	Polling Auto-write (ASCII/4)	Used when the maximum number of Heads to be written to the Carrier is 4.	Yes	No
531	Polling Auto-write Subcommand (ASCII/4)	Used when the maximum number of Heads to be written to the Carrier is 4.	Yes	No
532	Polling Auto-write (ASCII/8)	Used when the maximum number of Heads to be written to the Carrier is 8.	Yes	No
533	Polling Auto-write Subcommand (ASCII/8)	Used when the maximum number of Heads to be written to the Carrier is 8.	Yes	No
534	Polling Auto-write (Hexadecimal/2)	Used when the number of Heads to be written to the Carrier is 2.	Yes	No
535	Polling Auto-write Subcommand (Hexadecimal/2)	Used when the number of Heads to be written to the Carrier is 2.	Yes	No
536	Polling Auto-write (Hexadecimal/4)	Used when the maximum number of Heads to be written to the Carrier is 4.	Yes	No
537	Polling Auto-write Subcommand (Hexadecimal/4)	Used when the maximum number of Heads to be written to the Carrier is 4.	Yes	No
538	Polling Auto-write (Hexadecimal/8)	Used when the maximum number of Heads to be written to the Carrier is 8.	Yes	No
539	Polling Auto-write Subcommand (Hexadecimal/8)	Used when the maximum number of Heads to be written to the Carrier is 8.	Yes	No
540	Data check	Writes and verify the CRC code for the check blocks designated by the user.	Yes	Yes
541	Control management	Performs I/O or an I/O read.	Yes	Yes
542	Error information read	Reads information from the latest error log.	Yes	Yes

Sequence No.	Communications sequence name	Function	Ladder interface	
			Send word allocation	Receive word allocation
543	Command processing cancel	Cancels command processing except polling command processing and returns to the command waiting status.	Yes	Yes
544	Polling auto-read command processing cancel	Cancels polling auto-read processing.	Yes	Yes
545	Polling auto-write command processing cancel	Cancels polling auto-write processing.	Yes	Yes
546	General-purpose command	Sends arbitrary data and stores receive data to receive data words.	Yes	Yes

Note Ladder Interface Settings
YES: User settings are required for the 2nd and 3rd operands of PMCR.
NO: Send word allocation: Set a dummy word address for the 3rd operand (D).
Receive word allocation: Set the constant 0000 for the 2rd operand (S).

Connections

Connections when using the V600/V620 ID Controller Protocol are shown below.

RS-232C Connections

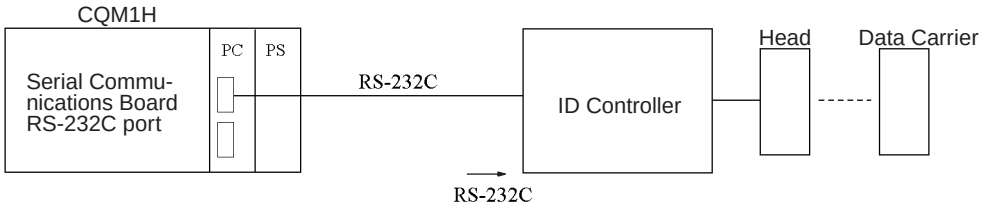

Serial Communications Board:
D-sub 9 pin (female)

Signal name	Pin No.
FG	1
SD	2
RD	3
RS	4
CS	5
SG	9

ID Controller (CD1D):
D-sub 9 pin (female)

Pin No.	Signal name
1	GR
2	SD
3	RD
4	RS
5	CS
9	SG

Shielded cable

ID Controller (CA1A):
D-sub 25 pin (female)

Serial Communications Board:
D-sub 9 pin (female)

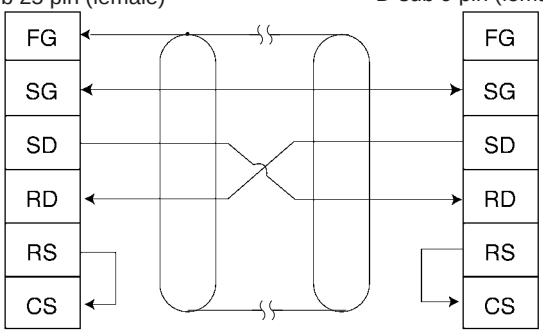

Shielded cable

RS422A Connections

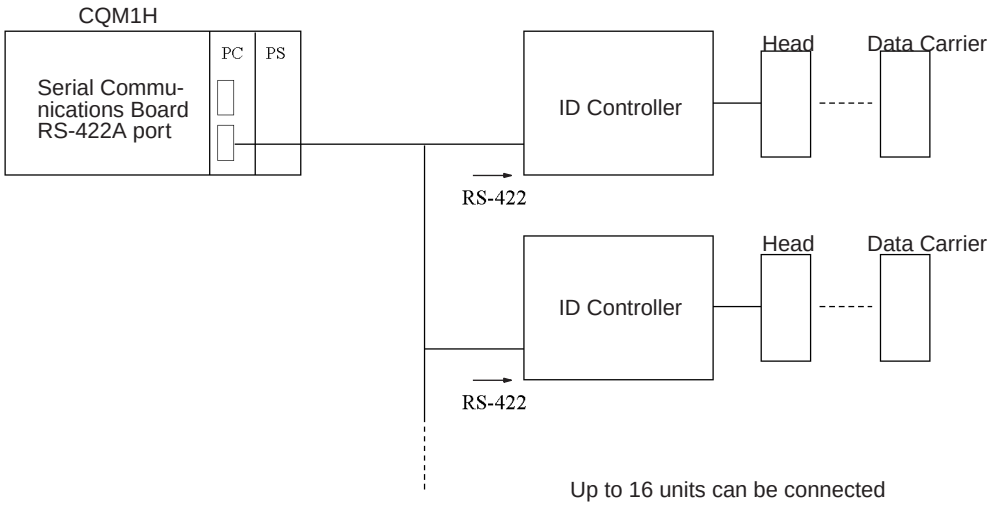

Serial Communications Board: D-sub 9 pin (female)

Signal name	Pin No.
RDB	8
SDB	2
RDA	6
SDA	1

ID Controller (CD1D): D-sub 9 pin (female)

Pin No.	Signal name
1	RDB
3	SG
5	SDB
6	RDA
7	FG
9	SDA

Shielded cable

Note 1. Ground the cable shield at either the ID Controller or the Serial Communications Board to prevent malfunction.

2. Turn ON the pin 6 on DIP switch SW6 to set the host communications procedure to the 1-to-N procedure for 1-to-N connections.

DIP Switch Settings

V600/620-CD1D DIP Switches

DIP Switch 1

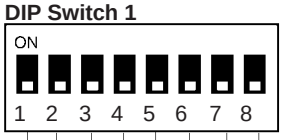

Not used (Always keep it OFF.)

SW7	Local communications mode setting
1	Speed priority setting
0	Distance priority setting

- SW7 Setting
  This setting is only valid if the EEPROM-type (batteryless-type) Data Carrier (DC) is accessed. The setting of SW7 does not work with the SRAM-type (battery-type) DC. SW7 must be set to OFF when the V620 is used.

SW4	SW5	SW6	Data length (bit)	STOP bits (bit)	Parity type
0	0	0	7	2	E
0	0	1	7	2	O
0	1	0	7	1	E
0	1	1	7	1	O
1	0	0	8	2	N
1	0	1	8	1	N
1	1	0	8	1	E
1	1	1	8	1	O

SW2	SW3	Baud rate (bps)
0	0	2400
0	1	4800
1	0	9600
1	1	19,200

SW1	Display mode
0	Error display mode
1	I/O display mode

DIP Switch 2

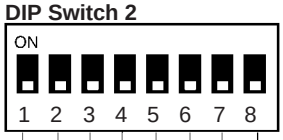

Not used (Always keep it OFF.)

SW6	Communications protocol setting with host devices
1	1-to-N protocol
0	1-to-1 protocol

Note When selecting the "1-to-N" protocol, setting is limited to N=1. In this case, the FCS check code may be added.

- ID Controller Unit Number Setting (Valid Only for 1-to-N Protocol)

SW3	SW4	SW5	Unit No.
0	0	0	No. 0
0	0	1	No. 1
0	1	0	No. 2
0	1	1	No. 3
1	0	0	No. 4
1	0	1	No. 5
1	1	0	No. 6
1	1	1	No. 7

Note 1. Be careful not to set to the same unit number twice.
2. Set them to OFF for the 1-to-1 protocol.

SW1	SW2	Synchronous condition
0	0	OFF (LL level)
0	1	ON (HL level)
1	0	Trailing edge
1	1	Leading edge

V600-CA□A DIP Switches

DIP Switch 1

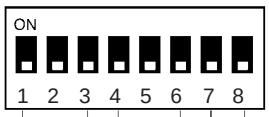

Note Factory Setting: All OFF

- Baud Rate Setting

SW1	SW2	SW3	Baud rate (bps)
0	1	1	1200
1	0	0	2400
1	0	1	4800
1	1	0	9600
1	1	1	19200

1=ON, 0=OFF

- SW7 and SW8: Be sure to set to OFF.
- Communications Format

SW4	SW5	SW6	Data length (bit)	STOP bit (bit)	Parity type
0	0	0	7	2	E
0	0	1	7	2	O
0	1	0	7	1	E
0	1	1	7	1	O
1	0	0	8	2	N
1	0	1	8	1	N
1	1	0	8	1	E
1	1	1	8	1	O

1=ON, 0=OFF (See note 1.) (See note 2.)

Note 1. Data length setting
7 bits: ASCII code
8 bits: JIS8 unit code

2. Parity setting
E: Even parity
O: Odd parity
N: No parity designation

DIP Switch 2

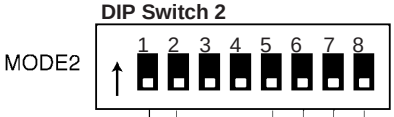

- SW8: Receive Side Terminal Resistance Setting (Valid Only for the V600-CA2A)

1	Connected (ID Controller send side)
0	Not connected

- SW7: Receive Side Terminal Resistance Setting (Valid Only for the V600-CA2A)

1	Connected (ID Controller receive side)
0	Not connected

- SW6: Communications Protocol Setting

1	1-to-N protocol
0	1-to-1 protocol

- ID Controller Unit Number Setting (Valid Only for the 1-to-N Protocol)

SW2	SW3	SW4	SW5	Unit No.
0	0	0	0	No. 0
0	0	0	1	No. 1
0	0	1	0	No. 2
0	0	1	1	No. 3
0	1	0	0	No. 4
0	1	0	1	No. 5
0	1	1	0	No. 6
0	1	1	1	No. 7
1	0	0	0	No. 8
1	0	0	1	No. 9
1	0	1	0	No. 10
1	0	1	1	No. 11
1	1	0	0	No. 12
1	1	0	1	No. 13
1	1	1	0	No. 14
1	1	1	1	No. 15

- Local Communications Mode Setting

1	Speed priority setting
0	Distance priority setting

- SW1 Setting
This setting is only valid if the EEPROM-type (battery less-type) Data Carrier (DC) is accessed. The setting of SW7 does not work with the SRAM-type (battery-type) DC.

- SW6 Setting
When selecting the 1-to-N protocol for the V600-CA1A/RS-232C interface, the setting is limited to N=1. In this case, the FCS check code may be added.

Note 1. Be careful not to set to the same unit number twice.
2. Set them to OFF for the 1-to-1 protocol.

Read (ASCII/1) (Sequence No. 500)

This sequence is used when the number of Heads to be read from the Carrier is 1.

Send Data Word Allocation (2nd Operand of PMCR)

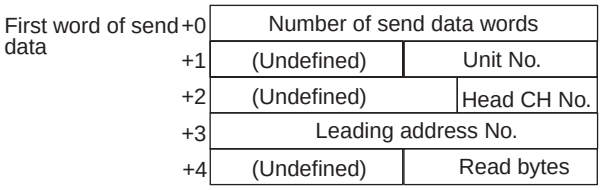

Offset	Contents (data format)	Data
+0	Number of send data words (4 digits BCD)	0005 (fixed)
+1	Unit No. (2 digits BCD)	00 to 07 (CD1D) 00 to 15 (CA□A)
+2	R/W Head channel (CH) No. (1 digit BCD)	R/W Head CH 1 designation:1 R/W Head CH 2 designation:2 The CD1D must be set to 1.
+3	Leading address No. (4 digits Hexadecimal)	0000 to FFFF
+4	Read bytes (2 digits Hexadecimal)	01 to F4 (1 to 244 bytes)

Receive Data Word Allocation (3rd Operand of PMCR)

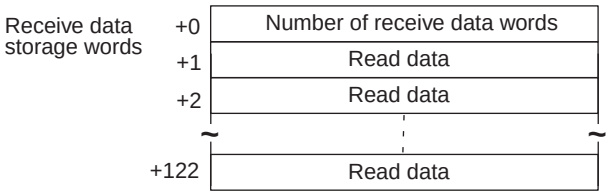

Offset	Contents (data format)	Data
+0	Number of receive data words (4 digits BCD)	0002 to 0123
+1 to +122	Read data (ASCII)	Number of read bytes stored in ASCII

Note Data from Data Carriers designated for ASCII is stored beginning with the smallest offset from the receive data words.

Read (ASCII/2) (Sequence No. 501)

This sequence is used when the number of Heads to be read from the Carrier is 2. Up to 118 bytes of data can be read for each Read/Write Head.

Send Data Word Allocation (2nd Operand of PMCR)

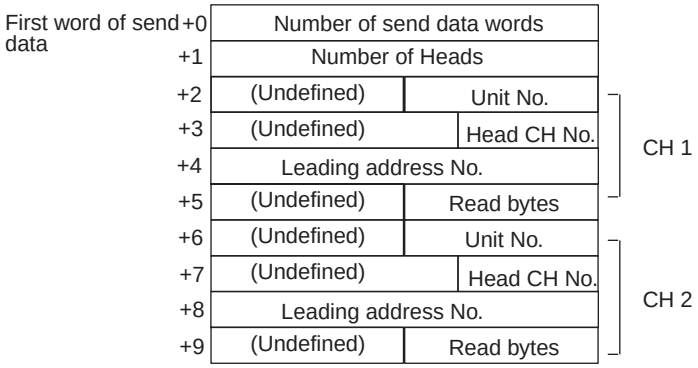

Offset	Contents (data format)	Data
+0	Number of send data words (4 digits BCD)	0006 to 0010
+1	Number of Heads (4 digits BCD)	0001 to 0002
+(4(N–1)+2)	Unit No. (2 digits BCD)	Arbitrary (However, there is a limit for the maximum Unit No. depending on the model)
+(4(N–1)+3)	R/W Head CH No. (1 digit BCD)	R/W Head CH 1 designation: 1 R/W Head CH 2 designation: 2 The CD1D must be set to 1.
+(4(N–1)+4)	Leading address No. (4 digits Hexadecimal)	0000 to FFFF
+(4(N–1)+5)	Read bytes (2 digits Hexadecimal)	01 to 76 (1 to 118 bytes)

N: Number of Heads

Receive Data Word Allocation (3rd Operand of PMCR)

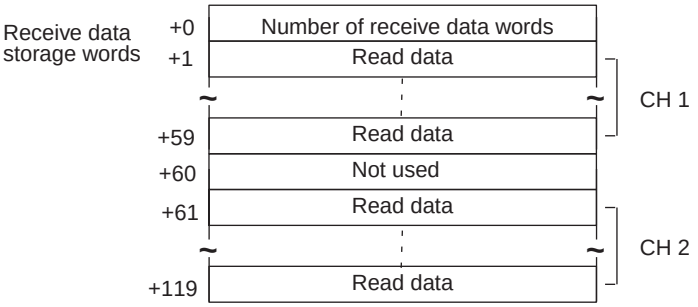

Offset	Contents (data format)	Data
+0	Number of receive data words (4 digits BCD)	0002 to 0120
+(60(N–1)+1) to +(60(N–1)+59)	Read data (ASCII)	Number of read bytes store in ASCII

N: Number of Heads

Note Data from Data Carriers designated for ASCII is stored beginning with the smallest offset from the receive data words.

Read (ASCII/4) (Sequence No. 502)

This sequence is used when the maximum number of Heads to be read from the Carrier is 4. Up to 48 bytes of data can be read for each Read/Write Head.

Send Data Word Allocation (2nd Operand of PMCR)

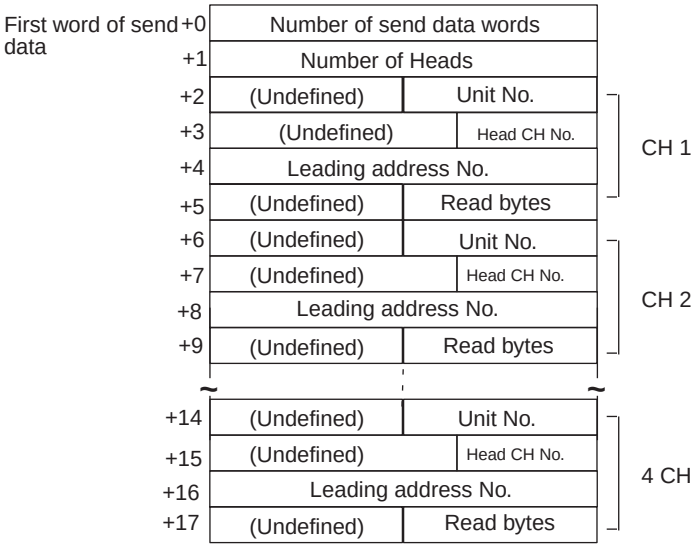

Offset	Contents (data format)	Data
+0	Number of send data words (4 digits BCD)	0006 to 0018
+1	Number of Heads (4 digits BCD)	0001 to 0004
+(4(N–1)+2)	Unit No. (2 digits BCD)	Arbitrary (However, there is a limit for the maximum Unit No. depending on the model)
+(4(N–1)+3)	R/W Head CH No. (1 digit BCD)	R/W Head CH 1 designation: 1 R/W Head CH 2 designation: 2 The CD1D must be set to 1.
+(4(N–1)+4)	Leading address No. (4 digits Hexadecimal)	0000 to FFFF
+(4(N–1)+5)	Read bytes (2 digits Hexadecimal)	01 to 30 (1 to 48 bytes)

N: Number of Heads

Receive Data Word Allocation (3rd Operand of PMCR)

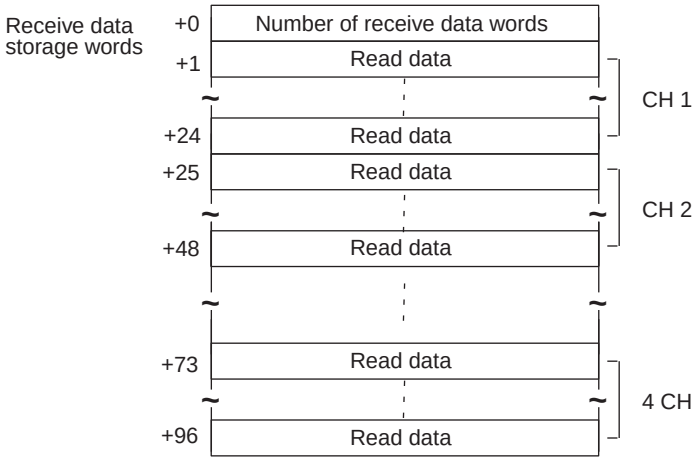

Offset	Contents (data format)	Data
+0	Number of receive data words (4 digits BCD)	0002 to 0097
+(24(N–1)+1) to +(24(N–1)+24)	Read data (ASCII)	Number of read bytes stored in ASCII

N: Number of Heads

Note Data from Data Carriers designated for ASCII is stored beginning with the smallest offset from the receive data words.

Read (ASCII/8) (Sequence No. 503)

This sequence is used when the maximum number of Heads to be read from the Carrier is 8. Up to 20 bytes of data can be read for each Read/Write Head.

Send Data Word Allocation (2nd Operand of PMCR)

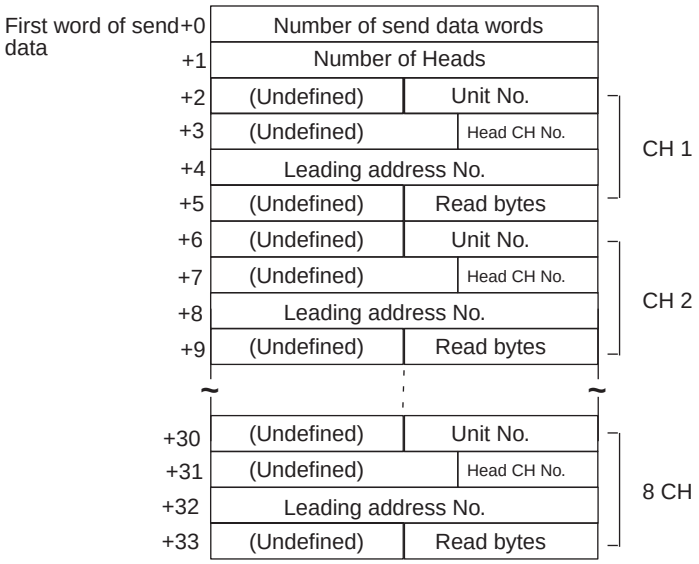

Offset	Contents (data format)	Data
+0	Number of send data words (4 digits BCD)	0006 to 0034
+1	Number of Heads (4 digits BCD)	0001 to 0008
+(4(N–1)+2)	Unit No. (2 digits BCD)	Arbitrary (However, there is a limit for the maximum Unit No. depending on the model)
+(4(N–1)+3)	R/W Head CH No. (1 digit BCD)	R/W Head CH 1 designation: 1 R/W Head CH 2 designation: 2 The CD1D must be set to 1.
+(4(N–1)+4)	Leading address No. (4 digits Hexadecimal)	0000 to FFFF
+(4(N–1)+5)	Read bytes (2 digits Hexadecimal)	01 to 14 (1 to 20 bytes)

N: Number of Heads

Receive Data Word Allocation (3rd Operand of PMCR)

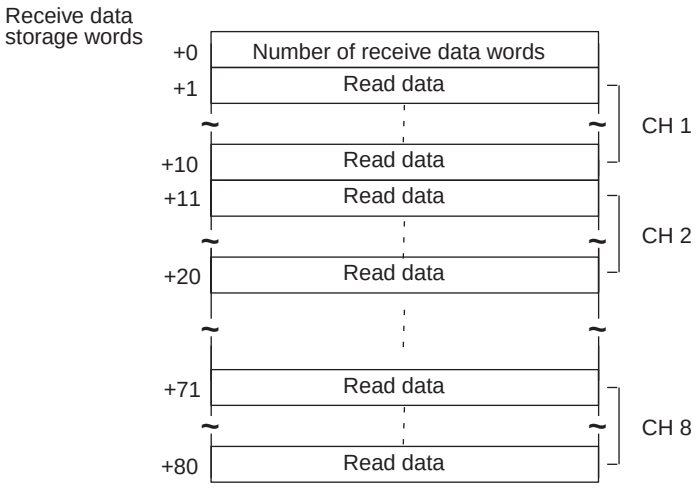

Offset	Contents (data format)	Data
+0	Number of receive data words (4 digits BCD)	0002 to 0081
+(10(N–1)+1) to +(10(N–1)+10)	Read data (ASCII)	Number of read bytes stored in ASCII

N: Number of Heads

Note Data from Data Carriers designated for ASCII is stored beginning with the smallest offset from the receive data words.

Read (Hexadecimal/1) (Sequence No. 504)

This sequence is used when the number of Heads to be read from the Carrier is 1.

Send Data Word Allocation (2nd Operand of PMCR)

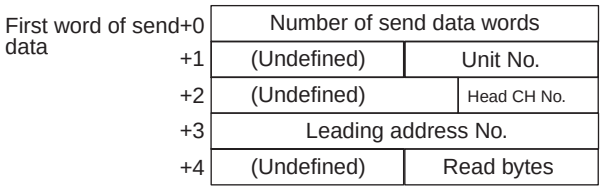

Offset	Contents (data format)	Data
+0	Number of send data words (4 digits BCD)	0005 (fixed)
+1	Unit No. (2 digits BCD)	00 to 07 (CD1D) 00 to 15 (CA□A)
+2	R/W Head CH No. (1 digit BCD)	R/W Head CH 1 designation: 1 R/W Head CH 2 designation: 2 The CD1D must be set to 1.
+3	Leading address No. (4 digits Hexadecimal)	0000 to FFFF
+4	Read bytes (2 digits Hexadecimal)	01 to 7A (1 to 122 bytes)

Receive Data Word Allocation (3rd Operand of PMCR)

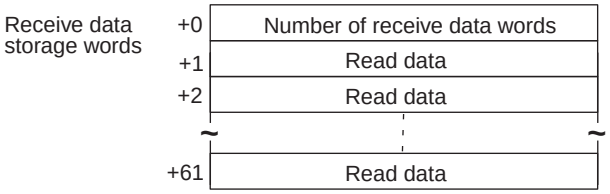

Offset	Contents (data format)	Data
+0	Number of receive data words (4 digits BCD)	0002 to 0062
+1 to +61	Read data (Hexadecimal)	Number of read bytes stored in hexadecimal data

Note Data for Data Carriers designated for hexadecimal is stored beginning with the largest offset from the receive data words.

Read (Hexadecimal/2) (Sequence No. 505)

This sequence is used when the maximum number of Heads to be read from the Carrier is 2. Up to 60 bytes of data can be read for each Read/Write Head.

Send Data Word Allocation (2nd Operand of PMCR)

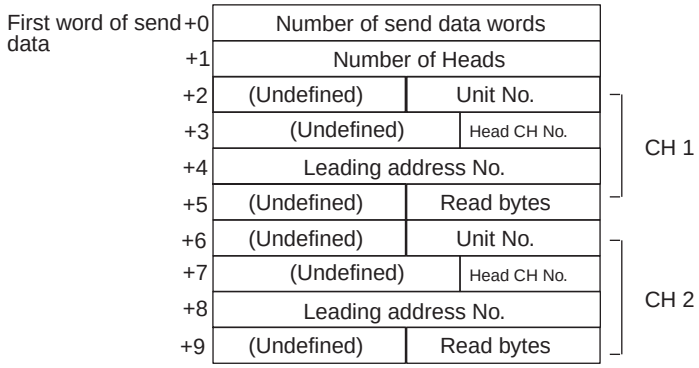

Offset	Contents (data format)	Data
+0	Number of send data words (4 digits BCD)	0006 to 0010
+1	Number of Heads (4 digits BCD)	0001 to 0002
+(4(N–1)+2)	Unit No. (2 digits BCD)	Arbitrary (However, there is a limit for the maximum Unit No. depending on the model)
+(4(N–1)+3)	R/W Head CH No. (1 digit BCD)	R/W Head CH 1 designation: 1 R/W Head CH 2 designation: 2 The CD1D must be set to 1.
+(4(N–1)+4)	Leading address No. (4 digits Hexadecimal)	0000 to FFFF
+(4(N–1)+5)	Read bytes (2 digits Hexadecimal)	01 to 3C (1 to 60 bytes)

N: Number of Heads

Receive Data Word Allocation (3rd Operand of PMCR)

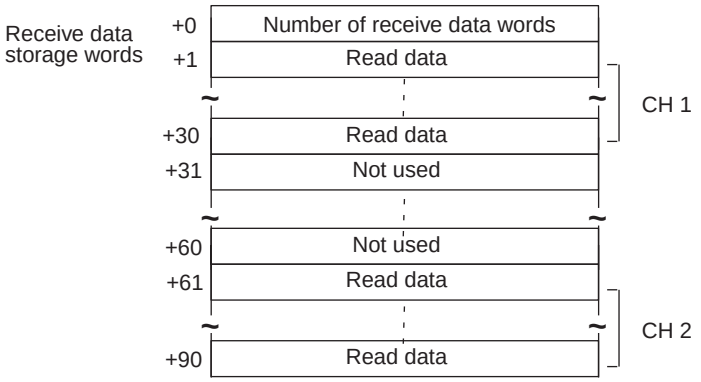

Offset	Contents (data format)	Data
+0	Number of receive data words (4 digits BCD)	0002 to 0091
+(60(N–1)+1) to +(60(N–1)+30)	Read data (Hexadecimal)	Number of read bytes stored in hexadecimal code

N: Number of Heads

Note Data for Data Carriers designated for hexadecimal is stored beginning with the largest offset from the receive data words.

Read (Hexadecimal/4) (Sequence No. 506)

This sequence is used when the maximum number of Heads to be read from the Carrier is 4. Up to 24 bytes of data can be read for each Read/Write Head.

Send Data Word Allocation (2nd Operand of PMCR)

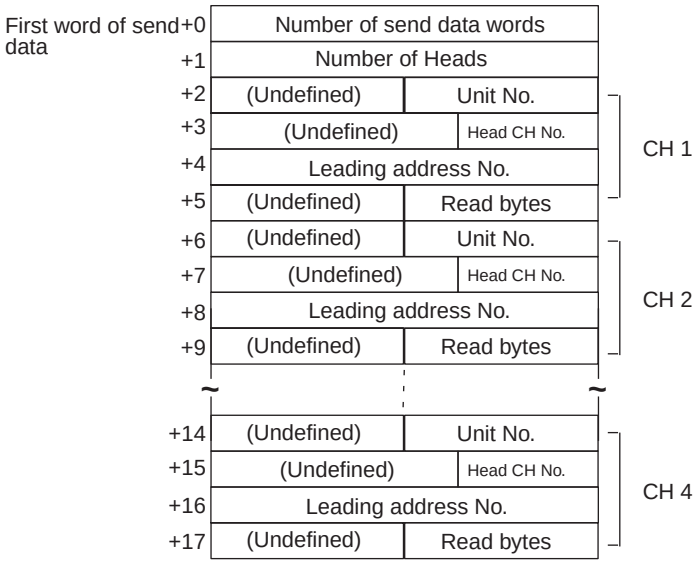

Offset	Contents (data format)	Data
+0	Number of send data words (4 digits BCD)	0006 to 0018
+1	Number of Heads (4 digits BCD)	0001 to 0004
+(4(N–1)+2)	Unit No. (2 digits BCD)	Arbitrary (However, there is a limit for the maximum Unit No. depending on the model)
+(4(N–1)+3)	R/W Head CH No. (1 digit BCD)	R/W Head CH 1 designation: 1 R/W Head CH 2 designation: 2 The CD1D must be set to 1.
+(4(N–1)+4)	Leading address No. (4 digits Hexadecimal)	0000 to FFFF
+(4(N–1)+5)	Read bytes (2 digits Hexadecimal)	01 to 18 (1 to 24 bytes)

N: Number of Heads

Receive Data Word Allocation (3rd Operand of PMCR)

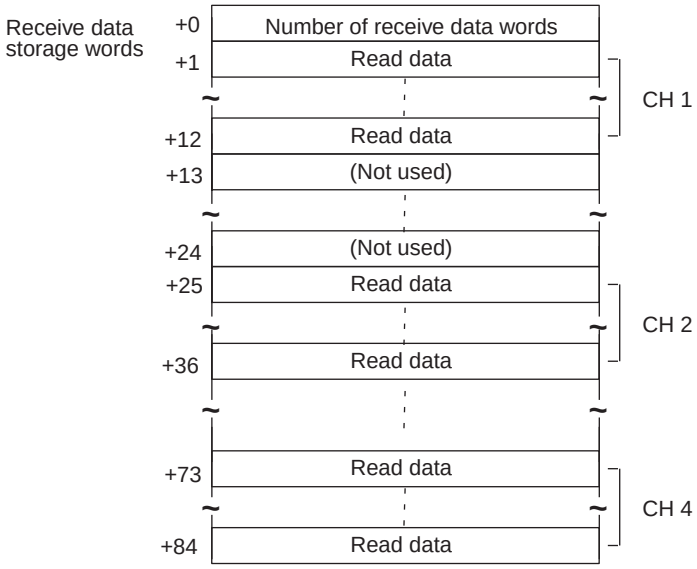

Offset	Contents (data format)	Data
+0	Number of receive data words (4 digits BCD)	0002 to 0085
+(24(N–1)+1) to +(24(N–1)+12)	Read data (Hexadecimal)	Number of read bytes stored in hexadecimal data

Note Data for Data Carriers designated for hexadecimal is received beginning with the largest offset from the receive data words.

Read (Hexadecimal/8) (Sequence No. 507)

This sequence is used when the maximum number of Heads to be read from the Carrier is 8. Up to 10 bytes of data can be read for each Read/Write Head.

Send Data Word Allocation (2nd Operand of PMCR)

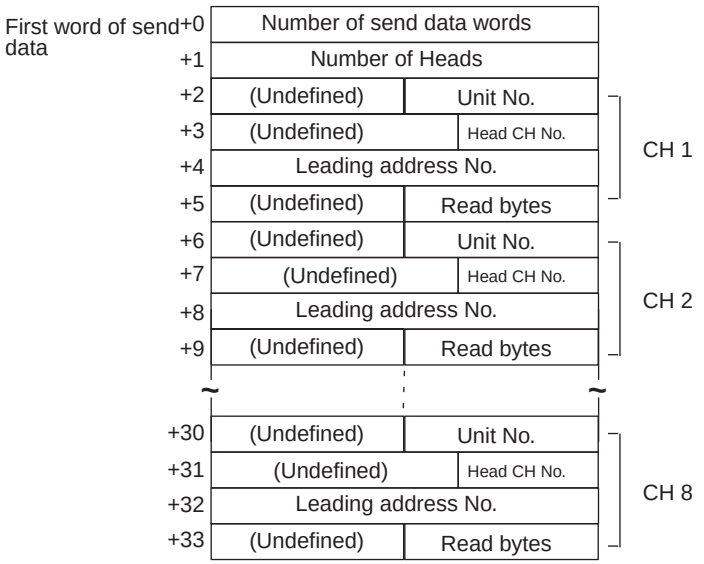

Offset	Contents (data format)	Data
+0	Number of send data words (4 digits BCD)	0006 to 0034
+1	Number of Heads (4 digits BCD)	0001 to 0008
+(4(N–1)+2)	Unit No. (2 digits BCD)	Arbitrary (However, there is a limit for the maximum Unit No. depending on the model)
+(4(N–1)+3)	R/W Head CH No. (1 digit BCD)	R/W Head CH 1 designation: 1 R/W Head CH 2 designation: 2 The CD1D must be set to 1.
+(4(N–1)+4)	Leading address No. (4 digits Hexadecimal)	0000 to FFFF
+(4(N–1)+5)	Read bytes (2 digits Hexadecimal)	01 to 0A (1 to 10 bytes)

N: Number of Heads

Receive Data Word Allocation (3rd Operand of PMCR)

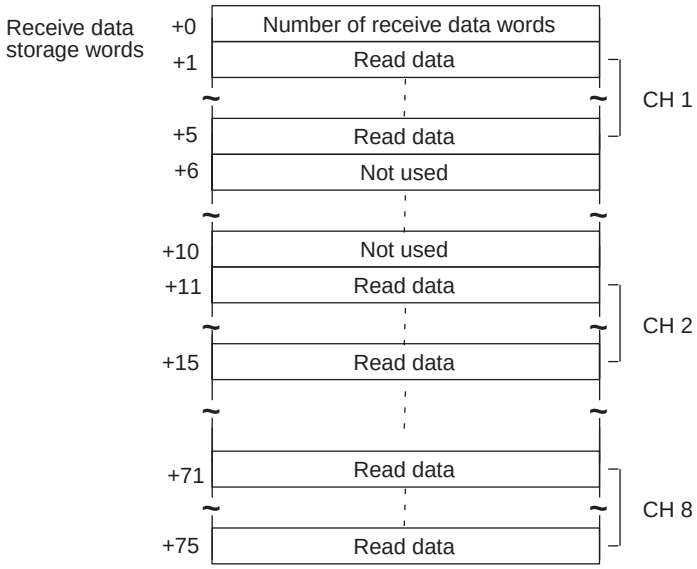

Offset	Contents (data format)	Data
+0	Number of receive data words (4 digits BCD)	0002 to 0076
+(10(N–1)+1) to +(10(N–1)+5)	Read data (CH 1) (Hexadecimal)	Number of read bytes stored in hexadecimal data

N: Number of Heads

Note Data for Data Carriers designated for hexadecimal is sent beginning with the largest offset from the receive data words.

Auto-read (ASCII/1) (Sequence No. 508)

This sequence is used when the maximum number of Heads to be read from the Carrier is 1.

Send Data Word Allocation (2nd Operand of PMCR)

The send data word allocation is similar to that of Sequence No. 500 (Read (ASCII/1)).

Receive Data Word Allocation (3rd Operand of PMCR)

The receive data word allocation is similar to that of Sequence No. 500 (Read (ASCII/1)).

Note For auto-read (AR), a response is not returned if the number of Heads is not read by the Carrier, the Abort Bit must be turned OFF to terminate the sequence.

Auto-read (Hexadecimal/1) (Sequence No. 509)

This sequence is used when the maximum number of Heads to be read from the Carrier is 1.

Send Data Word Allocation (2nd Operand of PMCR)

The send data word allocation is similar to that of Sequence No. 504 (Read (Hexadecimal/1)).

Receive Data Word Allocation (3rd Operand of PMCR)

The receive data word allocation is similar to that of Sequence No. 504 (Read (Hexadecimal/1)).

Note For auto-read (AR), a response is not returned if the number of Heads is not read by the Carrier, the Abort Bit must be turned OFF to terminate the sequence.

Polling Auto-read (ASCII) (Sequence No. 510)

This sequence is used when the number of Heads to be read from the Carrier is from 1 to 8.

Send Data Word Allocation (2nd Operand of PMCR)

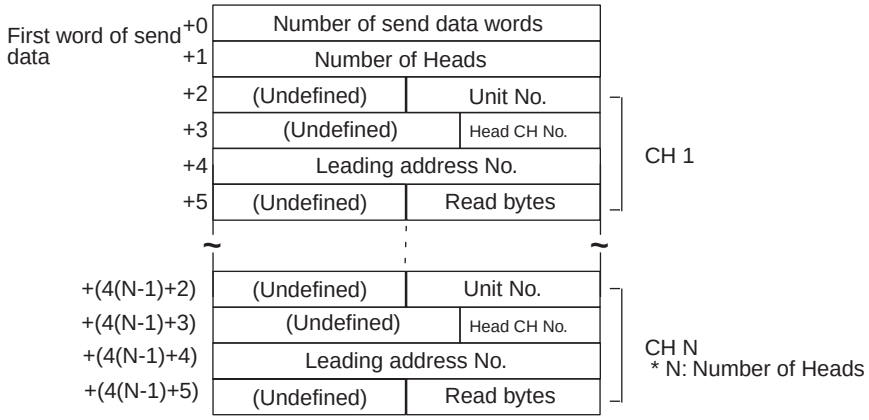

Offset	Contents (data format)	Data
+0	Number of send data words (4 digits BCD)	0006 to 0034
+1	Number of Heads (4 digits BCD)	0001 to 0008
+(4(N–1)+2)	Unit No. (2 digits BCD)	Arbitrary (However, there is a limit for the maximum Unit No. depending on the model)
+(4(N–1)+3)	R/W Head CH No. (1 digit BCD)	R/W Head CH 1 designation: 1 R/W Head CH 2 designation: 2 The CD1D must be set to 1.
+(4(N–1)+4)	Leading address No. (4 digits Hexadecimal)	0000 to FFFF
+(4(N–1)+5)	Read bytes (2 digits Hexadecimal)	If number of Heads is 2 or less 01 to 76 (1 to 118 bytes)
		If number of Heads is 4 or less 01 to 30 (1 to 48 bytes)
		If number of Heads is 8 or less 01 to 20 (1 to 20 bytes)

N: Number of Heads

Receive Data Word Allocation (3rd Operand of PMCR)

None.

Note
1. Execute Sequence No. 510 before executing Sequence No. 511, 512, 513.
2. Execute Sequence No. 544 (Polling Auto-read Command Processing Cancel) to cancel the polling auto-read.
3. Retry processing is not performed for this sequence.

Polling Auto-read Sub-command (ASCII/2) (Sequence No. 511)

This sequence is used when the maximum number of Heads to be read from the Carrier is 2. Up to 118 bytes of data can be read for each Read/Write Head.

Send Data Word Allocation (2nd Operand of PMCR)

The send data word allocation is similar to that of Sequence No. 501 (Read (ASCII/2)). However, the leading address No. and number of read bytes are not used and will be the value specified for sequence #510.

Receive Data Word Allocation (3rd Operand of PMCR)

The receive data word allocation is similar to that of Sequence No. 501 (Read (ASCII/2)).

Note
1. Execute Sequence No. 510 before executing Sequence No. 511.
2. Data from Data Carriers designated for ASCII is stored beginning with the smallest offset from the receive data words.
3. Retry processing is not performed for this sequence.

Polling Auto-read Sub-command (ASCII/4) (Sequence No. 512)

This sequence is used when the maximum number of Heads to be read from the Carrier is 4. Up to 48 bytes of data can be read for each Read/Write Head.

Send Data Word Allocation (2nd Operand of PMCR)

The send data word allocation is similar to that of Sequence No. 502 (Read (ASCII/4)). However, the leading address No. and number of read bytes are not used and will be the value specified for sequence #510.

Receive Data Word Allocation (3rd Operand of PMCR)

The receive data word allocation is similar to that of Sequence No. 502 (Read (ASCII/4)).

Note
1. Execute Sequence No. 510 before executing Sequence No. 512.
2. Data from Data Carriers designated for ASCII is stored beginning with the smallest offset from the receive data words.
3. Retry processing is not performed for this sequence.

Polling Auto-read Sub-command (ASCII/8) (Sequence No. 513)

This sequence is used when the maximum number of Heads to be read from the Carrier is 8. Up to 20 bytes of data can be read for each Read/Write Head.

Send Data Word Allocation (2nd Operand of PMCR)

The send data word allocation is similar to that of Sequence No. 503 (Read (ASCII/8)). However, the leading address No. and number of read bytes are not used and will be the value specified for sequence #510.

Receive Data Word Allocation (3rd Operand of PMCR)

The receive data word allocation is similar to that of Sequence No. 503 (Read (ASCII/8)).

Note
1. Execute Sequence No. 510 before executing Sequence No. 513.
2. Data from Data Carriers designated for ASCII is stored beginning with the smallest offset from the receive data words.
3. Retry processing is not performed for this sequence.

Polling Auto-read (Hexadecimal) (Sequence No. 514)

This sequence is used when the number of Heads to be read from the Carrier is from 1 to 8.

Send Data Word Allocation (2nd Operand of PMCR)

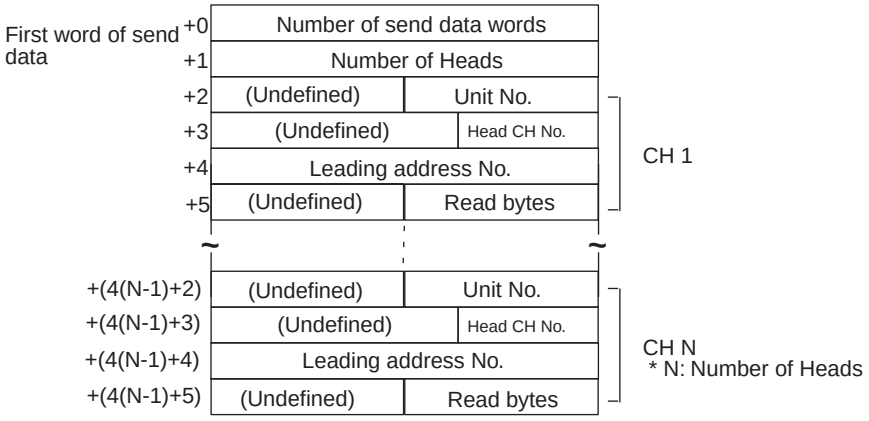

Offset	Contents (data format)	Data
+0	Number of send data words (4 digits BCD)	0006 to 0034
+1	Number of Heads (4 digits BCD)	0001 to 0008
+(4(N–1)+2)	Unit No. (2 digits BCD)	Arbitrary (However, there is a limit for the maximum Unit No. depending on the model)
+(4(N–1)+3)	R/W Head CH No. (1 digit BCD)	R/W Head CH 1 designation: 1 R/W Head CH 2 designation: 2
+(4(N–1)+4)	Leading address No. (4 digits Hexadecimal)	0000 to FFFF
+(4(N–1)+5)	Read bytes (2 digits Hexadecimal)	If number of Heads is 2 or less 01 to 3C (1 to 60 bytes)
		If number of Heads is 4 or less 01 to 18 (1 to 24 bytes)
		If number of Heads is 8 or less 01 to 0A (1 to 10 bytes)

N: Number of Heads

Receive Data Word Allocation (3rd Operand of PMCR)

None.

Note 1. Execute Sequence No. 514 before executing Sequence No. 515, 516, 517.

2. Execute Sequence No. 544 (Polling Auto-read Command Processing Cancel) to cancel the polling auto-read.

Polling Auto-read Sub-command (Hexadecimal/2) (Sequence No. 515)

This sequence is used when the maximum number of Heads to be read from the Carrier is 2. Up to 60 bytes of data can be read for each Read/Write Head.

Send Data Word Allocation (2nd Operand of PMCR)

The send data word allocation is similar to that of Sequence No. 505 (Read (Hexadecimal/2)). However, the leading address No. and number of read bytes are not used and will be the value specified for sequence #514.

Receive Data Word Allocation (3rd Operand of PMCR)

The receive data word allocation is similar to that of Sequence No. 505 (Read (Hexadecimal/2)).

Note 1. Execute Sequence No. 514 before executing Sequence No. 515.

2. Data from Data Carrier designated for hexadecimal is stored beginning with the largest offset from the receive data words.
3. Retry processing is not performed for this sequence.

Polling Auto-read Sub-command (Hexadecimal/4) (Sequence No. 516)

This sequence is used when the maximum number of Heads to be read from the Carrier is 4. Up to 24 bytes of data can be read for each Read/Write Head.

Send Data Word Allocation (2nd Operand of PMCR)

The send data word allocation is similar to that of Sequence No. 506 (Read (Hexadecimal/4)). However, the leading address No. and number of read bytes are not used and will be the value specified for sequence #514.

Receive Data Word Allocation (3rd Operand of PMCR)

The receive data word allocation is similar to that of Sequence No. 506 (Read (Hexadecimal/4)).

Note 1. Execute Sequence No. 514 before executing Sequence No. 516.
2. Data from Data Carrier designated for hexadecimal is stored beginning with the largest offset from the receive data words.

Polling Auto-read Sub-command (Hexadecimal/8) (Sequence No.517)

This sequence is used when the maximum number of Heads to be read from the Carrier is 8. Up to 10 bytes of data can be read for each Read/Write Head.

Send Data Word Allocation (2nd Operand of PMCR)

The send data word allocation is similar to that of sequence No.507 (Read (Hexadecimal/8)). However, the leading address No. and number of read bytes are not used and will be the value specified for sequence #514.

Receive Data Word Allocation (3rd Operand of PMCR)

The receive data word allocation is similar to that of sequence No.507 (Read (Hexadecimal/8)).

Note 1. Execute sequence No.514 before executing sequence No.517.
2. Data from Data Carriers designated for hexadecimal is stored beginning with the largest offset from the receive data words.
3. Retry processing is not performed for this sequence.

Write (ASCII/1) (Sequence No.518)

This sequence is used when the number of Heads to be written to the Carrier is 1.

Send Data Word Allocation (2nd Operand of PMCR)

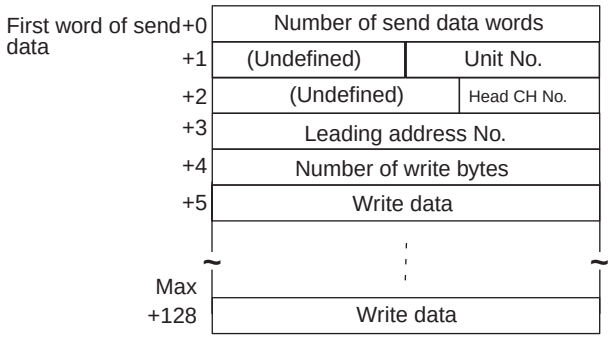

Offset	Contents (data format)	Data
+0	Number of send data words (4 digits BCD)	0006 to 0129
+1	Relevant Unit No. (2 digits BCD)	00 to 07 (CD1D) 00 to 15 (CA2A)
+2	R/W Head CH No. (1 digit BCD)	R/W Head CH 1 designation: 1 R/W Head CH 2 designation: 2 The CD1D must be set to 1.
+3	Leading address No. (4 digits Hexadecimal)	0000 to FFFF
+4	Number of write bytes (4 digits BCD)	0001 to 0248
+5 to +128	Write data (ASCII)	Input in ASCII Up to 248 bytes (max.) can be set

Receive Data Word Allocation (3rd Operand of PMCR)

None.

Note Write data designated for ASCII is sent beginning with the smallest offset from the send data words.

Write (ASCII/2) (Sequence No. 519)

This sequence is used when the number of Heads to be written to the Carrier is 2. Up to 118 bytes of data can be read for each Read/Write Head.

Send Data Word Allocation (2nd Operand of PMCR)

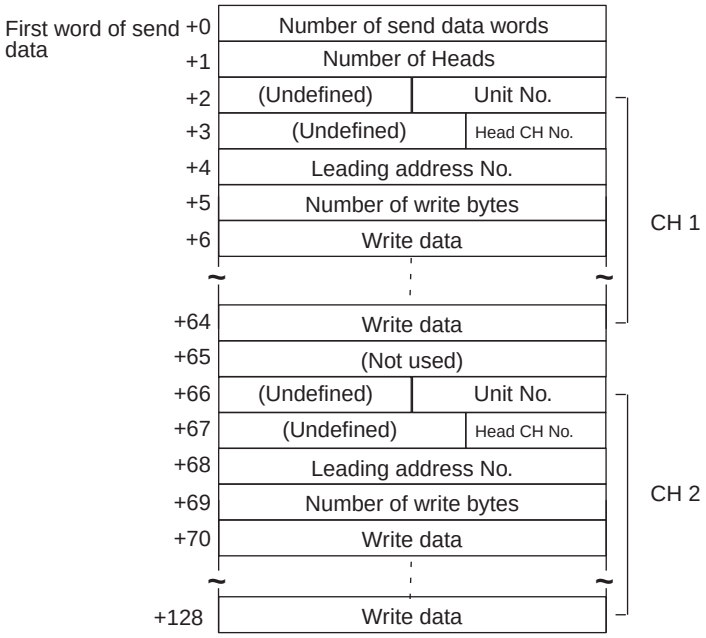

Offset	Contents (data format)	Data
+0	Number of send data words (4 digits BCD)	0007 to 0129
+1	Number of Heads (4 digits BCD)	0001 to 0002
+(64(N–1)+2)	Unit No. (2 digits BCD)	Arbitrary (However, there is a limit for the maximum Unit No. depending on the model)
+(64(N–1)+3)	R/W Head CH No. (1 digit BCD)	R/W Head CH 1 designation: 1 R/W Head CH 2 designation: 2 The CD1D must be set to 1.
+(64(N–1)+4)	Leading address No. (4 digits Hexadecimal)	0000 to FFFF
+(64(N–1)+5)	Number of write bytes (4 digits BCD)	0001 to 0118
+(64(N–1)+6) to (64(N–1)+64)	Write data (ASCII)	Input in ASCII. Up to 118 bytes (max.) can be set

N: Number of Heads

Receive Data Word Allocation (3rd Operand of PMCR)

None.

Note Write data designated for ASCII is sent beginning with the smallest offset from the send data words.

Write (ASCII/4) (Sequence No. 520)

This sequence is used when the number of Heads to be written to the Carrier is 4. Up to 48 bytes of data can be read for each Read/Write Head.

Send Data Word Allocation (2nd Operand of PMCR)

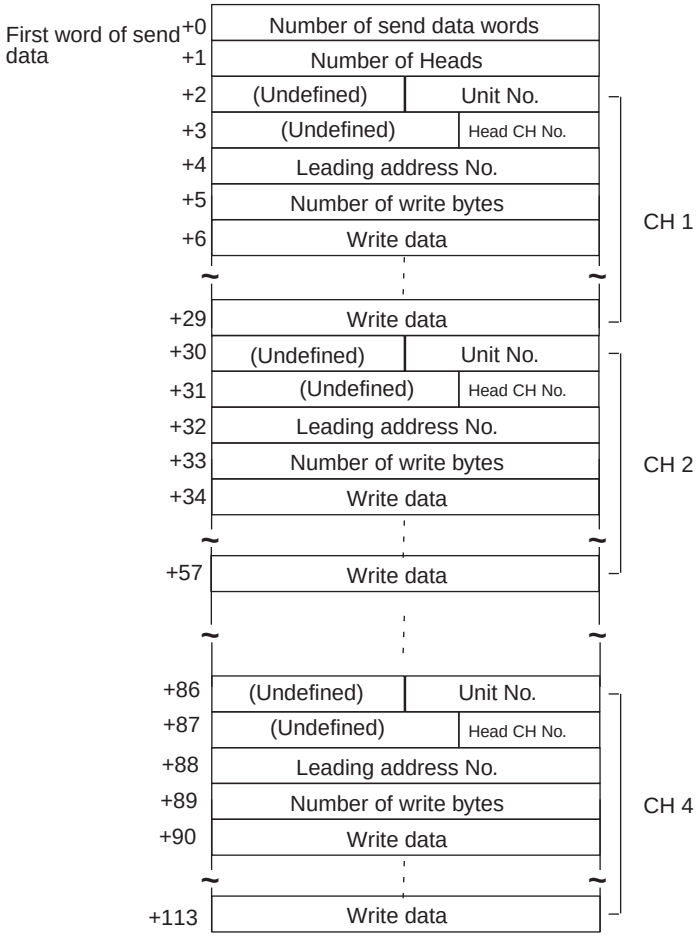

Offset	Contents (data format)	Data
+0	Number of send data words (4 digits BCD)	0007 to 0114
+1	Number of Heads (4 digits BCD)	0001 to 0004
+(28(N–1)+2)	Unit No. (2 digits BCD)	Arbitrary (However, there is a limit for the maximum Unit No. depending on the model)
+(28(N–1)+3)	R/W Head CH No. (1 digit BCD)	R/W Head CH 1 designation: 1 R/W Head CH 2 designation: 2 The CD1D must be set to 1.
+(28(N–1)+4)	Leading address No. (4 digits Hexadecimal)	0000 to FFFF
+(28(N–1)+5)	Number of write bytes (4 digits BCD)	0001 to 0048
+(28(N–1)+6) to (28(N–1)+29)	Write data (ASCII)	Input in ASCII. Up to 48 bytes (max.) can be set

N: Number of Heads

Receive Data Word Allocation (3rd Operand of PMCR)

None.

Note Write designated for ASCII is sent beginning with the smallest offset from the send data words.

Write (ASCII/8) (Sequence No. 521)

This sequence is used when the number of Heads to be written to the Carrier is 8. Up to 20 bytes of data can be read for each Read/Write Head.

Send Data Word Allocation (2nd Operand of PMCR)

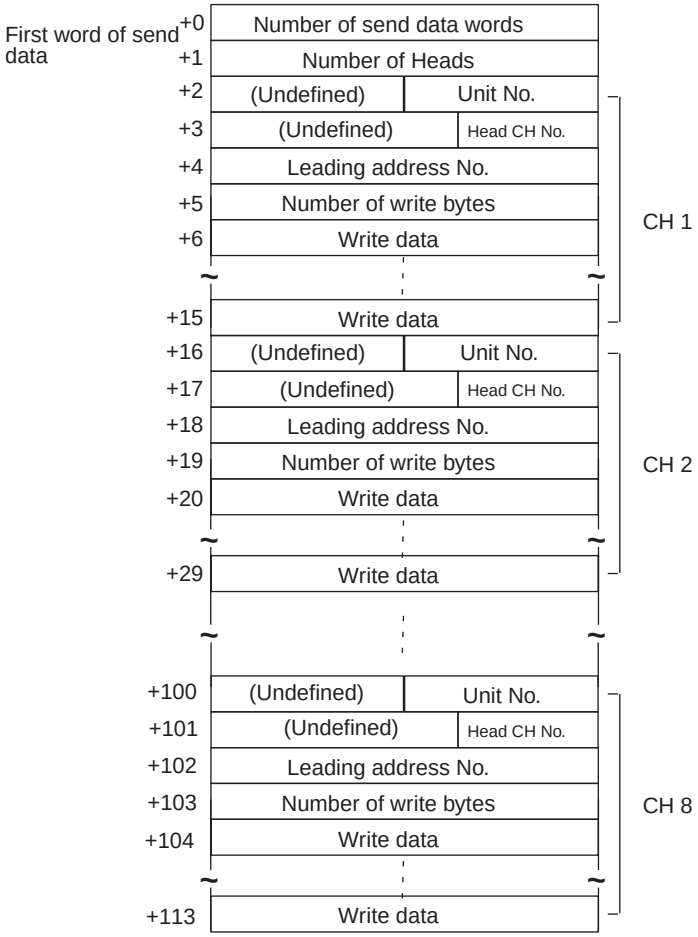

Offset	Contents (data format)	Data
+0	Number of send data words(4 digits BCD)	0007 to 0114
+1	Number of Heads (4 digits BCD)	0001 to 0008
+(14(N–1)+2)	Unit No. (2 digits BCD)	Arbitrary (However, there is a limit for the maximum Unit No. depending on the model)
+(14(N–1)+3)	R/W Head CH No. (1 digit BCD)	R/W Head CH 1 designation: 1 R/W Head CH 2 designation: 2 The CD1D must be set to 1.
+(14(N–1)+4)	Leading address No. (4 digits Hexadecimal)	0000 to FFFF
+(14(N–1)+5)	Number of write bytes (4 digits BCD)	0001 to 0020
+(14(N–1)+6) to (14(N–1)+15)	Write data (ASCII)	Input in ASCII Up to 20 bytes (max.) can be set

N: Number of Heads

Receive Data Word Allocation (3rd Operand of PMCR)

None.

Note Write data designated for ASCII is sent beginning with the smallest offset from the send data words.

Write (Hexadecimal/1) (Sequence No. 522)

This sequence is used when the number of Heads to be written to the Carrier is 1.

Send Data Word Allocation (2nd Operand of PMCR)

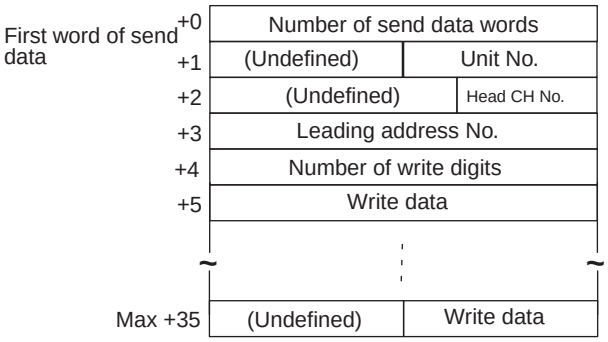

Offset	Contents (data format)	Data
+0	Number of send data words (4 digits BCD)	0006 to 0036
+1	Relevant Unit No. (2 digits BCD)	00 to 07 (CD1D) 00 to 15 (CA2A)
+2	R/W Head CH No. (1 digit BCD)	R/W Head CH 1 designation: 1 R/W Head CH 2 designation: 2 The CD1D must be set to 1.
+3	Leading address No. (4 digits Hexadecimal)	0000 to FFFF
+4	Number of write digits (4 digits BCD)	0002 to 0122
+5 to 35	Write data (Hexadecimal)	Input in hexadecimal Up to 122 digits (max.)

Receive Data Word Allocation (3rd Operand of PMCR)

None.

Note 1. Data of which Data Carrier designated for hexadecimal is sent beginning with the largest offset from the send data words.

2. Always set an even number of digits for the write data.

Write (Hexadecimal/2) (Sequence No. 523)

This sequence is used when the number of Heads to be written to the Carrier is 2. Up to 56 digits of data can be written for each Read/Write Head.

Send Data Word Allocation (2nd Operand of PMCR)

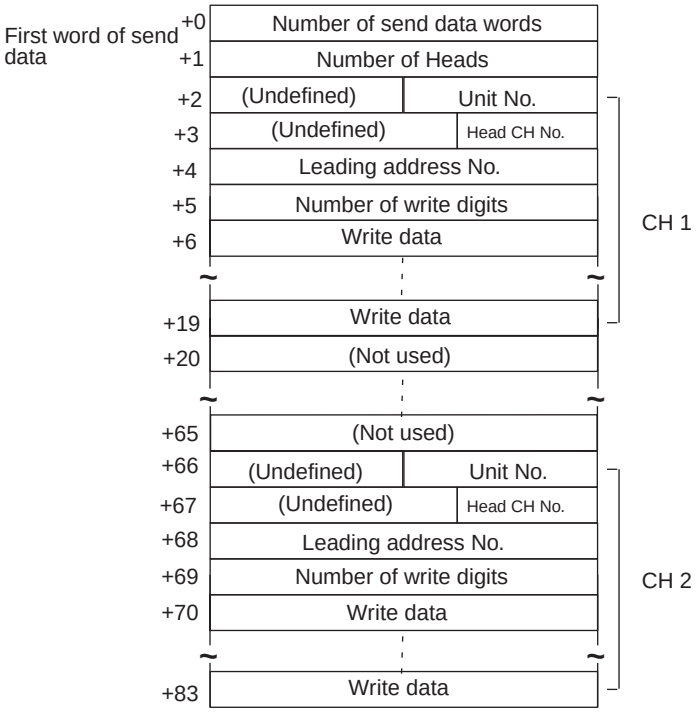

Offset	Contents (data format)	Data
+0	Number of send data words (4 digits BCD)	0007 to 0084
+1	Number of Heads (4 digits BCD)	0002 to 0002
+(64(N–1)+2)	Unit No. (2 digits BCD)	Arbitrary (However, there is a limit for the maximum Unit No. depending on the model)
+(64(N–1)+3)	R/W Head CH No. (1 digit BCD)	R/W Head CH 1 designation: 1 R/W Head CH 2 designation: 2 The CD1D must be set to 1.
+(64(N–1)+4)	Leading address No. (4 digits Hexadecimal)	0000 to FFFF
+(64(N–1)+5)	Number of write digits (4 digits BCD)	0002 to 0056
+(64(N–1)+6) to (64(N–1)+19)	Write data (Hexadecimal)	Input in hexadecimal Up to 56 digits (max.) can be set

N: Number of Heads

Receive Data Word Allocation (3rd Operand of PMCR)

None.

Note 1. Write data designated for hexadecimal is sent beginning with the largest offset from the send data words.

2. Always set an even number of digits for the write data.

Write (Hexadecimal/4) (Sequence No. 524)

This sequence is used when the number of Heads to be written to the Carrier is 4. Up to 24 digits of data can be written for each Read/Write Head.

Send Data Word Allocation (2nd Operand of PMCR)

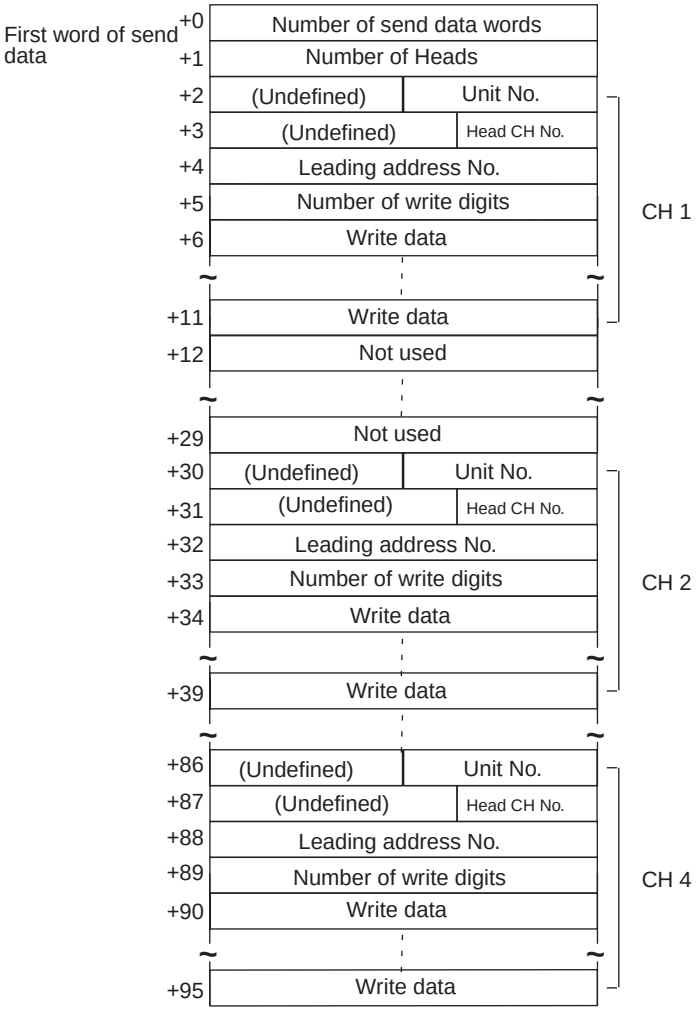

Offset	Contents (data format)	Data
+0	Number of send data words (4 digits BCD)	0007 to 0096
+1	Number of Heads (4 digits BCD)	0001 to 0004
+(28(N–1)+2)	Unit No. (2 digits BCD)	Arbitrary (However, there is a limit for the maximum Unit No. depending on the model)
+(28(N–1)+3)	R/W Head CH No. (1 digit BCD)	R/W Head CH 1 designation: 1 R/W Head CH 2 designation: 2 The CD1D must be set to 1.
+(28(N–1)+4)	Leading address No. (4 digits Hexadecimal)	0000 to FFFF
+(28(N–1)+5)	Number of write digits (4 digits BCD)	0002 to 0024
+(28(N–1)+6) to (28(N–1)+11)	Write data (Hexadecimal)	Input in hexadecimal code Up to 24 digits (max.) can be set

N: Number of Heads

Receive Data Word Allocation (3rd Operand of PMCR)

None.

Note 1. Write data designated for hexadecimal is sent beginning with the largest offset from the send data words.

2. Always set an even number of digits for the write data.

Write (Hexadecimal/8) (Sequence No. 525)

This sequence is used when the number of Heads to be written to the Carrier is 8. Up to 10 digits of data can be written for each Read/Write Head.

Send Data Word Allocation (2nd Operand of PMCR)

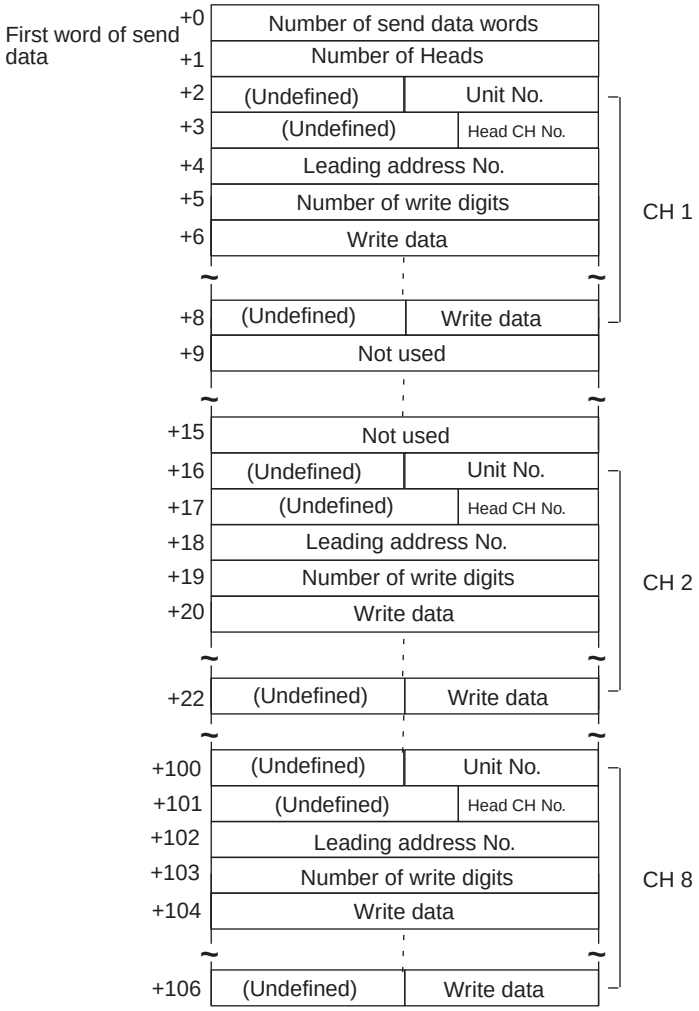

Offset	Contents (data format)	Data
+0	Number of send data words (4 digits BCD)	0007 to 0107
+1	Number of Heads (4 digits BCD)	0001 to 0004
+(14(N–1)+2)	Unit No. (2 digits BCD)	Arbitrary (However, there is a limit for the maximum Unit No. depending on the model)
+(14(N–1)+3)	R/W Head CH No. (1 digit BCD)	R/W Head CH 1 designation: 1 R/W Head CH 2 designation: 2 The CD1D must be set to 1.
+(14(N–1)+4)	Leading address No. (4 digits Hexadecimal)	0000 to FFFF
+(14(N–1)+5)	Number of write digits (4 digits BCD)	0002 to 0010
+(14(N–1)+6) to (14(N–1)+8)	Write data (Hexadecimal)	Input in hexadecimal code Up to 10 digits (max.) can be set

N: Number of Heads

Receive Data Word Allocation (3rd Operand of PMCR)

None.

Note 1. Write data designated for hexadecimal is sent beginning with the largest offset from the send data words.

2. Always set an even number of digits for the write data.

Auto-write (ASCII/1) (Sequence No. 526)

This sequence is used when the number of Heads to be written to the Carrier is 1.

Send Data Word Allocation (2nd Operand of PMCR)

The send data word allocation is similar to that of Sequence No. 518 (Write(ASCII/1)).

Receive Data Word Allocation (3rd Operand of PMCR)

The receive data word allocation is similar to that of Sequence No. 518 (Write(ASCII/1)).

Note For auto-write (AW), a response is not returned if the number of Heads is not written by the Carrier, the Abort Bit must be turned OFF to terminate the sequence.

Auto-write (Hexadecimal/1) (Sequence No. 527)

This sequence is used when the number of Heads to be written to the Carrier is 1.

Send Data Word Allocation (2nd Operand of PMCR)

The send data word allocation is similar to that of Sequence No. 522 (Write (Hexadecimal/1)).

Receive Data Word Allocation (3rd Operand of PMCR)

The receive data word allocation is similar to that of Sequence No. 522 (Write (Hexadecimal/1)).

Note For auto-write (AW), a response is not returned if the number of Heads is not written by the Carrier, the Abort Bit must be turned OFF to terminate the sequence.

Polling Auto-write (ASCII/2) (Sequence No. 528)

This sequence is used when the number of Heads to be written to the Carrier is 2.

Send Data Word Allocation (2nd Operand of PMCR)

The send data word allocation is similar to that of Sequence No. 519 (Write (ASCII/2)).

Receive Data Word Allocation (3rd Operand of PMCR)

The receive data word allocation is similar to that of Sequence No. 519 (Write (ASCII/2)).

Note 1. Execute Sequence No. 545 (Polling Auto-write Command Processing Cancel) to cancel the polling auto-write.

2. Retry processing is not performed for this sequence.

Polling Auto-write Subcommand (ASCII/2) (Sequence No. 529)

This sequence is used when the number of Heads to be written to the Carrier is 2. Up to 118 digits of data can be written for each Read/Write Head.

Send Data Word Allocation (2nd Operand of PMCR)

The send data word allocation is similar to that of Sequence No. 519 (Write (ASCII/2)). However, the leading address No., number of write, and write data are not used and become undefined.

Receive Data Word Allocation (3rd Operand of PMCR)

None.

Note 1. Execute Sequence No. 528 before executing Sequence No. 529.
2. Retry processing is not performed for this sequence.

Polling Auto-write (ASCII/4) (Sequence No. 530)

This sequence is used when the number of Heads to be written to the Carrier is 4.

Send Data Word Allocation (2nd Operand of PMCR)

The send data word allocation is similar to that of Sequence No. 520 (Write (ASCII/4)).

Receive Data Word Allocation (3rd Operand of PMCR)

The receive data word allocation is similar to that of Sequence No. 520 (Write(ASCII/4)).

Note Execute Sequence No. 545 (Polling Auto-write Command Processing Cancel) to cancel the polling auto-write.

Polling Auto-write Subcommand (ASCII/4) (Sequence No. 531)

This sequence is used when the number of Heads to be written to the Carrier is 4. Up to 48 digits of data can be written for each Read/Write Head.

Send Data Word Allocation (2nd Operand of PMCR)

The send data word allocation is similar to that of Sequence No. 520 (Write (ASCII/4)). However, the leading address No., number of write, and write data are not used and become undefined.

Receive Data Word Allocation (3rd Operand of PMCR)

None.

Note 1. Execute Sequence No. 530 before executing Sequence No. 531.
2. Retry processing is not performed for this sequence.

Polling Auto-write (ASCII/8) (Sequence No. 532)

This sequence is used when the number of Heads to be written to the Carrier is 8.

Send Data Word Allocation (2nd Operand of PMCR)

The send data word allocation is similar to that of Sequence No. 521 (Write (ASCII/8)).

Receive Data Word Allocation (3rd Operand of PMCR)

The receive data word allocation is similar to that of Sequence No. 521 (Write (ASCII/8)).

Note 1. Execute Sequence No. 545 (Polling Auto-write Command Processing Cancel) to cancel the polling auto-write.
2. Retry processing is not performed for this sequence.

Polling Auto-write Subcommand (ASCII/8) (Sequence No. 533)

This sequence is used when the number of Heads to be written to the Carrier is 8. Up to 20 digits of data can be written for each Read/Write Head.

Send Data Word Allocation (2nd Operand of PMCR)

The send data word allocation is similar to that of Sequence No. 521 (Write (ASCII/8)). However, the leading address No., number of write, and write data are not used and become undefined.

Receive Data Word Allocation (3rd Operand of PMCR)
None.

Note 1. Execute Sequence No. 532 before executing Sequence No. 533.
2. Retry processing is not performed for this sequence.

Polling Auto-write (Hexadecimal/2) (Sequence No. 534)

This sequence is used when the number of Heads to be written to the Carrier is 2.

Send Data Word Allocation (2nd Operand of PMCR)
The send data word allocation is similar to that of Sequence No. 523 (Write (Hexadecimal/2)).

Receive Data Word Allocation (3rd Operand of PMCR)
The receive data word allocation is similar to that of Sequence No. 523 (Write (Hexadecimal/2)).

Note 1. Execute Sequence No. 545 (Polling Auto-write Command Processing Cancel) to cancel the polling auto-write.
2. Retry processing is not performed for this sequence.

Polling Auto-write Subcommand (Hexadecimal/2) (Sequence No. 535)

This sequence is used when the number of Heads to be written to the Carrier is 2. Up to 56 digits of data can be written for each Read/Write Head.

Send Data Word Allocation (2nd Operand of PMCR)
The send data word allocation is similar to that of Sequence No. 523 (Write (Hexadecimal/2)). However, the leading address No., number of write, and write data are not used and become undefined.

Receive Data Word Allocation (3rd Operand of PMCR)
None.

Note 1. Execute Sequence No. 534 before executing Sequence No. 535.
2. Retry processing is not performed for this sequence.

Polling Auto-write (Hexadecimal/4) (Sequence No. 536)

This sequence is used when the number of Heads to be written to the Carrier is 4.

Send Data Word Allocation (2nd Operand of PMCR)
The send data word allocation is similar to that of Sequence No. 524 (Write (Hexadecimal/4)).

Receive Data Word Allocation (3rd Operand of PMCR)
The receive data word allocation is similar to that of Sequence No. 524 (Write (Hexadecimal/4)).

Note 1. Execute Sequence No. 545 (Polling Auto-write Command Processing Cancel) to cancel the polling auto-write.
2. Retry processing is not performed for this sequence.

Polling Auto-write Subcommand (Hexadecimal/4) (Sequence No. 537)

This sequence is used when the number of Heads to be written to the Carrier is 2. Up to 24 digits of data can be written for each Read/Write Head.

Send Data Word Allocation (2nd Operand of PMCR)
The send data word allocation is similar to that of Sequence No. 524 (Write (Hexadecimal/4)). However, the leading address No., number of write, and write data are not used and become undefined.

Receive Data Word Allocation (3rd Operand of PMCR)
None.

Note 1. Execute Sequence No. 536 before executing Sequence No. 537.
2. Retry processing is not performed for this sequence.

Polling Auto-write (Hexadecimal/8) (Sequence No. 538)

This sequence is used when the number of Heads to be written to the Carrier is 8.

Send Data Word Allocation (2nd Operand of PMCR)

The send data word allocation is similar to that of Sequence No. 525 (Write (Hexadecimal/8)).

Receive Data Word Allocation (3rd Operand of PMCR)

The receive data word allocation is similar to that of Sequence No. 525 (Write (Hexadecimal/8)).

Note 1. Execute Sequence No. 545 (Polling Auto-write Command Processing Cancel) to cancel the polling auto-write.
2. Retry processing is not performed for this sequence.

Polling Auto-write Subcommand (Hexadecimal/8) (Sequence No. 539)

This sequence is used when the number of Heads to be written to the Carrier is 8. Up to 10 digits of data can be written for each Read/Write Head.

Send Data Word Allocation (2nd Operand of PMCR)

The send data word allocation is similar to that of Sequence No. 525 (Write (Hexadecimal/8)). However, the leading address No., number of write, and write data are not used and become undefined.

Receive Data Word Allocation (3rd Operand of PMCR)

None.

Note 1. Execute Sequence No. 538 before executing Sequence No. 539.
2. Retry processing is not performed for this sequence.

Data Check (Sequence No. 540)

This sequence writes and verifies the CRC code for check blocks designated by the user.

Send Data Word Allocation (2nd Operand of PMCR)

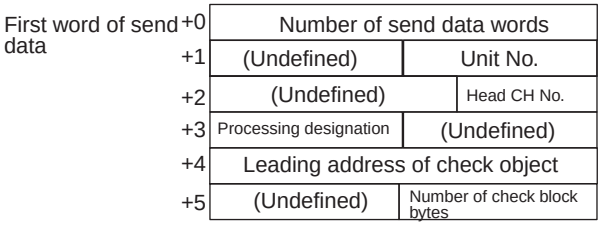

Offset	Contents (data format)	Data
+0	Number of send data words (4 digits BCD)	0006 (fixed)
+1	Unit No. (2 digits BCD)	00 to 07 (CD1D) 00 to 15 (CA2A)
+2	R/W Head CH No. (1 digit BCD)	R/W Head CH 1 designation:1 R/W Head CH 2 designation:2 The CD1D must be set to 1.
+3	Processing designation (2 digits Hexadecimal)	Verification:43 (C) Calculation:4B (K) Management of number of write times: 4C (L)
+4	Leading address of check object (4 digits Hexadecimal)	0000 to FFFF (If management of number of write times is designated, H' □□□0 to H' □□□5 or H' □□□8 to H' □□□D)
+5	Number of check block bytes (2 digits Hexadecimal)	If verification, calculation is designated: 03 to FF (set 00 for 256 bytes) If management of number of write times is designated: 00 to FF

Receive Data Word Allocation (3rd Operand of PMCR)

Receive data storage words			
+0	Number of receive data words		
+1	(Undefined)	Completion code	

Offset	Contents (data format)	Data
+0	Number of receive data words (4 digits BCD)	0002 (fixed)
+1	Completion code (2 digits Hexadecimal)	(Verification, calculation designation) 00:Normal completion for calculation processing 75: Data in normal condition for verification processing 76: Error Data alarm for verification processing (If management of number of write times is designated) 75:Number of write times is under those which is specified. 76:alarm for number of write times is over those which is specified.

Note If L (management of number of write times) is designated by processing designation, management of number of write times for Data Carrier of EEPROM is performed.

Control (Sequence No. 541)

This sequence performs I/O operations or I/O reads.

Send Data Word Allocation (2nd Operand of PMCR)

First word of send data				
+0	Number of send data words			
+1	(Undefined)	Unit No.		
+2	(Undefined)	OUT1 operation	OUT2 operation	

Offset	Contents (data format)	Data
+0	Number of send data words (4 digits BCD)	0003 (fixed)
+1	Unit No. (2 digits BCD)	00 to 07 (CD1D)
+2	OUT1 operation (1 digit BCD)	0: No operation 1: turned ON 2: turned OFF
	OUT2 operation (1 digit BCD)	0: No operation 1: turned ON 2: turned OFF

Receive Data Word Allocation (3rd Operand of PMCR)

Receive data storage words			
+0	Number of receive data words		
+1	Current input status	Output status after operation	

Offset	Contents (data format)	Data
+0	Number of receive data words (4 digits BCD)	0002 (fixed)
+1 Leftmost 1 byte	Current input status Leftmost 4 bits:IN1 operation Rightmost 4 bits:IN2 operation	1: ON status 0: OFF status
	Output status after operation Leftmost 4 bits:OUT1 operation Rightmost 4 bits:OUT2 operation	1: ON status 0: OFF status

Note 1. The V600/620-CA□A does not support this command.

2. This sequence executes the equivalent of the CONTROL command.

Error Information Read (Sequence No. 542)

This sequence reads information from the latest error log.

Send Data Word Allocation (2nd Operand of PMCR)

First word of send data	+0	Number of send data words	
	+1	(Undefined)	Unit No.

Offset	Contents (data format)	Data
+0	Number of send data words (4 digits BCD)	0002 (fixed)
+1	Unit No. (2 digits BCD)	00 to 07 (CD1D)

Receive Data Word Allocation (3rd Operand of PMCR)

Receive data storage words	+0	Number of receive data words
	+1	Error log
	~	~
	+75	Error log

Offset	Contents (data format)	Data
+0	Number of receive data words (4 digits BCD)	0004 to 0076
+1 to +75	Error log (ASCII)	One item of data is stored with 5 characters of generated command, generated Head No., generated error code.

Note 1. The V600/620-CA□A does not support this command.

2. Up to 30 error records can be stored.

3. The most resent error records are stored first.

Command Processing Cancel (Sequence No. 543)

This sequence cancels command processing except for polling command processing. The command waiting status is entered.

Send Data Word Allocation (2nd Operand of PMCR)

First word of send data	+0	Number of send data words	
	+1	(Undefined)	Unit No.

Offset	Contents (data format)	Data
+0	Number of send data words (4 digits BCD)	0002 (fixed)
+1	Unit No. (2 digits BCD)	Arbitrary (However, there is a limit for the maximum Unit No. depending on the model)

Receive Data Word Allocation (3rd Operand of PMCR)

Receive data storage words	+0	Number of receive data words	
	+1	(Undefined)	Unit No.

Offset	Contents (data format)	Data
+0	Number of receive data words (4 digits BCD)	0002 (fixed)
+1	Completion code (2 digits Hexadecimal)	00: Normal termination 14: Auto or communications command processing not executed 75: Cancelled before the end of expansion command receive or before sync input went active or before detection of the existence of Data Carrier 76: Cancelled during read/write processing for Data Carrier

Polling Auto-read Command Processing Cancel (Sequence No. 544)

This sequence cancels polling auto-read processing.

Send Data Word Allocation (2nd Operand of PMCR)

First word of send data

+0	Number of send data words	
+1	(Undefined)	Unit No.
+2	(Not used)	
+3	(Undefined)	Head channel No.

Offset	Contents (data format)	Data
+0	Number of send data words (4 digits BCD)	0004 (fixed)
+1	Unit No. (2 digits BCD)	Arbitrary (However, there is a limit for the maximum Unit No. depending on the model)
+2	Not used	
+3	R/W Head CH No. (1 digit BCD)	R/W Head CH 1 designation: 1 R/W Head CH 2 designation: 2 The CD1D must be set to 1.

Receive Data Word Allocation (3rd Operand of PMCR)

Receive data storage words

+0	Number of receive data words	
+1	(Undefined)	Completion code

Offset	Contents (data format)	Data
+0	Number of receive data words (4 digits BCD)	0002 (fixed)
+1	Completion code (2 digits Hexadecimal)	75: Cancelled before communications processing with Data Carrier 76: Cancelled after communications processing with Data Carrier

Polling Auto-write Command Processing Cancel (Sequence No. 545)

This sequence cancels polling auto-write processing

Send Data Word Allocation (2nd Operand of PMCR)

The send data word allocation is similar to that of Sequence No. 544 (Polling Auto-read Command Processing Cancel)

Receive Data Word Allocation (3rd Operand of PMCR)

The receive data word allocation is similar to that of Sequence No. 544 (Polling Auto-read Command Processing Cancel)

General-purpose Command (Sequence No. 546)

This sequence transmits arbitrary data and stores receive data to the receive data words. The characters “@”, FCS (terminator) are not required in the send data words and receive data words. These characters will be automatically added for transmission and automatically removed before saving data.

Send Data Word Allocation (2nd Operand of PMCR)

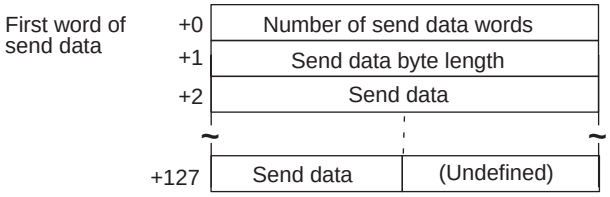

Offset	Contents (data format)	Data
+0	Number of send data words (4 digits BCD)	0003 to 0128
+1	Send data byte length (4 digits BCD)	0001 to 0251 The number of bytes in the send data except for @, the FCS, and the terminator.
+2 to +127	Send data (ASCII)	Input send data up to 251 characters (max.) in ASCII

Receive Data Storage Word Allocation (3rd Operand of PMCR)

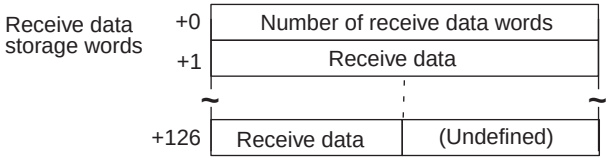

Offset	Contents (data format)	Data
+0	Number of receive data words (4 digits BCD)	0002 to 0127
+1 to +126	Receive data (ASCII)	Receive data is stored in ASCII. Up to 251 characters (max.)

Appendix N

Hayes Modem AT Command Protocol

The Hayes Modem AT Command Protocol is used to make various settings or control remotely a Hayes modem connected to the Serial Communications Board via RS-232C cable.

Protocol Configuration

The configuration of the Hayes Modem AT Command Protocol is shown below.

Sequence No.	Communications sequence name	Function	Ladder interface	
			Send word allocation	Receive word allocation
550	Initialize modem (general-purpose)	Initializes the modem connected to the Serial Communications Board. The initialization command is set in the words specified for the second operand of PMCR.	Yes	No
560 570 580	Initialize modem (specialized)	Initializes certain OMRON Modems.	No	No
561 571 581	Dial	Dials from the modem connected to the Serial Communications Board. AT commands and telephone numbers are set set in the words specified for the second operand of PMCR. This sequence can be used only for certain OMRON modems.	Yes	No
552	Password	After the line is connected, the password sent from the other exchange is verified to confirm that the line is connected to the desired exchange. The normal value of a password is set in the words specified for the second operand of PMCR.	Yes	No
553	Data send/receive (general purpose sequence)	Sends arbitrary data to the exchange which the line is connected. Send data is set in the words specified for the second operand of PMCR. Receive data is stored in the words specified for the third operand of PMCR.	Yes	Yes
554	Escape	Shifts the modem to escape mode (the condition in which command input is available during data communications). The escape code is fixed to “+++”	No	No
555	Hang up	After shifting to escape mode, the line is disconnected.	No	No
562 572 582	Initialize and dial	Executes continuously from initialization to dialling operations for certain OMRON Modems.	Yes*	No
590	Escape to hang up	Executes continuously from shifting to the escape mode to hanging up.	No	No

1. **Ladder Interface Settings**
   YES: User settings are required for the 2nd and 3rd operands of PMCR.
   NO: Send word allocation: Set a dummy word address for the 3rd operand (D).
   Receive word allocation: Set the constant 0000 for the 2rd operand (S).
2. For details about dialling, refer to sequences 561, 571 and 581.

Connections

The connections when using the Hayes Modem AT Command Protocol is shown below.

RS-232C Connection

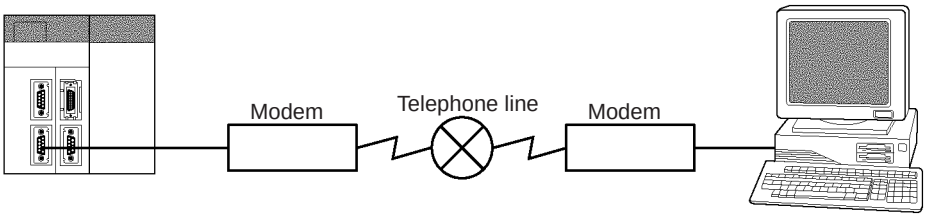

Modem: D-sub 25 pin (female)

1	FG
2	SD
3	RD
4	RS
5	CS
6	DR
7	SG
8	CD
9	
10	
11	
12	
13	
14	
15	ST2
16	
17	RT
18	
19	
20	ER
21	
22	CI
23	
24	ST1
25	

CQM1H D-sub 9 pin (female)

1	FG
2	SD
3	RD
4	RS
5	CS
6	5V
7	DR
8	ER
9	SG

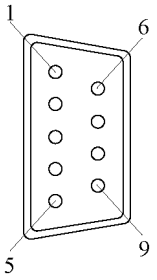

Compatible Modems

Although most of the sequences in this protocol can be used regardless of modem, the sequences Initialize Modem (specialized) and Dial sequences can be used only for the following Modems:

- MD24FB10V (OMRON Modem)
- MD144FB5V (OMRON Intelligent Modem)
- ME1414VB2/B2 (OMRON FAX/DATA Modem)

For other modems, create a modem initialization sequence using the general-purpose Initialize Modem sequence and dial using the Data Send/Receive sequence (Sequence No. 553).

Modem Settings

When this protocol is used, it is required that the modem connected to the Serial Communications Board be initialized to the following conditions:

Command echo	No
Result code display format	Numeric format
Speed display, busy/dialling tone detection at connection	Baud rate display enabled, busy and dialling tone detection enabled.
Error correction data compression display	Error correction/data compression display enabled
MNP setting	Error correction provided (auto-reliable mode)
MNP class setting	MNP class 4
V.42 compression, Error correction	Not enabled
Flow control between terminal modems	Not enabled
ER signal control	Always ON
Escape code	+

Note 1. It is recommended that, in addition to the above settings, the abort timer should be set so that communications are cut off if a communications error happened due to incidents such as cable disconnection between the Serial Communications Board and modem. Set the abort timer to 10 minutes for the modem initialization (specialized) (Sequence No. 560, 570, 580). Refer to modem's manual for further information about abort timers.

2. The data format of the modem (baud rate, data length, parity, stop bit) is set by AT commands issued from a device connected to the modem. Its settings should conform to communications conditions of the device which issues AT commands. Therefore when communications are made between the modem and Serial Communications Board, it is required that communications conditions should be set by issuing AT commands from the Serial Communications Board.

3. Modem settings become invalid if the power supply is turned off and must be set again. However, a memory backup function can be used to protect settings so that even after the power supply to the modem is turned off, it can communicate with the previous setting conditions.

For Initialize Modem (specialized), the modem initialization command is built in as message data. However, for Initialize Modem (general-purpose), the command must be specified in PMCR.

Operand 1	#x550 (x: Communications port)
Operand 2	First address for storing initialization command character string C
Operand 3	None

C+0	Number of words from address set for operand 2 to end of data	4 digits BCD
C+1	Number of bytes for send data (initialization command)	4 digits BCD
C+2 : C+n	Send data (initialization command) (Fill data to left for odd numbers of bytes)	ASCII

Setting Example for Modem Initialization Command

- **MD24FB10V Using Sequence #550 (OMRON)**

The following command is set in the words specified by the second operand of PMCR.

ATE0V0X4\V2\N3%C0*C0\X1&M0S26=10

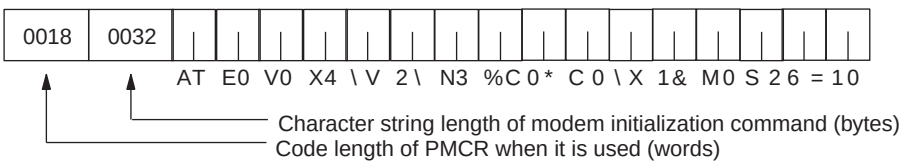

Note Turn ON pin 4 of DIP switches SW3 on for this Modem (ER signal always ON).

MD144FB5V (OMRON)

The following command is set in the words specified by the second operand of PMCR.

ATE0V0X4\V2\N3%C0*C0\Q0&M0&D0%B9600S26=10

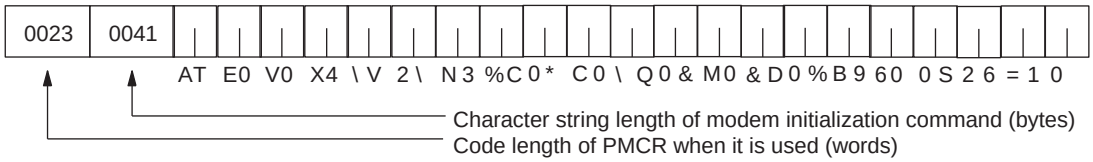

ME1414VBII/ME1414BII (OMRON)

The following command is set in the words specified by the second operand of PMCR.

AT\J1B8E0V0S0=1X4\V2\N3&M0%C0&D0&E0\X1S26=10

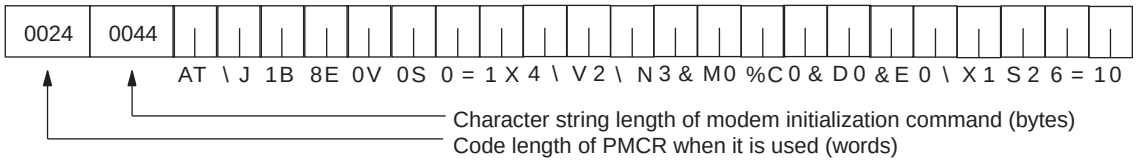

Note Turn ON DIP switch SW3 on in the rear of the Modem.

Dialling

To dial telephone numbers for the OMRON Modems using sequences No. 561, 571, 581, set the dialling command and telephone number in the words specified by the second operand of PMCR. However, for other Modems, make the following settings for the Data Send/Receive sequence.

This is an example of telephone number settings for the above mentioned 3 OMRON Modems.

Operand and Word Settings of PMCR

Operand 1	MD24FB10V MD144FB5V ME1414VB2/B2	#x561 (x: Communications port) #x571 #x581
Operand 2	First address C of send data (dialling operation)	
Operand 3	None	

C+0	Number of words from address set for operand 2 to end of data	4 digits BCD
C+1	Number of bytes of send data (dialling operation)	4 digits BCD
C+2 : C+n	Send data (dialling operation) (Fill data to left for odd numbers of bytes)	ASCII

Setting Example

If telephone number is 03-0123-4567

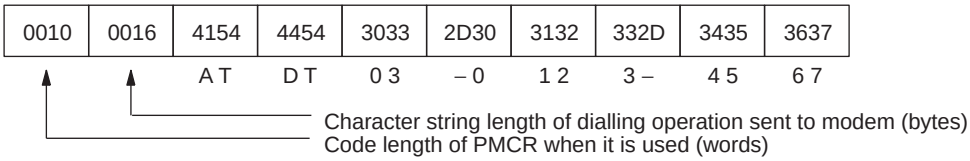

Note 1. This example uses a tone line. Change ATDT to ATDP for pulse lines.

2. Fill the telephone number to the left in the words if the character string length of the dialling operation is an odd number of bytes.

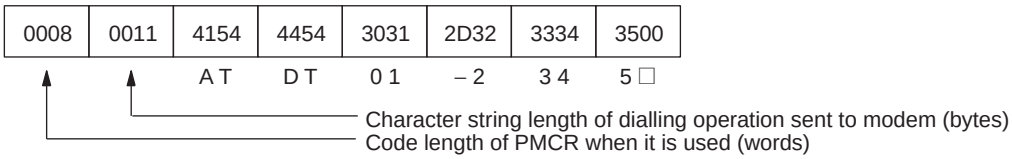

Password Verification

A password can be verified by executing sequence No. 552 of this protocol. It is required to set in advance the value of the password in the words specified by the second operand of PMCR.

Operand and Word Settings of PMCR

Operand 1	#x550 (x: Communications port)
Operand 2	First address of the words where the password is set
Operand 3	None

C+0	Number of words from address set for operand 2 to end of data	4 digits BCD
C+1	Number of bytes of comparison data (normal value of password)	4 digits BCD
C+2 : C+n	Comparison value (password normal value) (Fill data to left for odd numbers of bytes)	ASCII

Setting Example

When password is OMRON-CO.

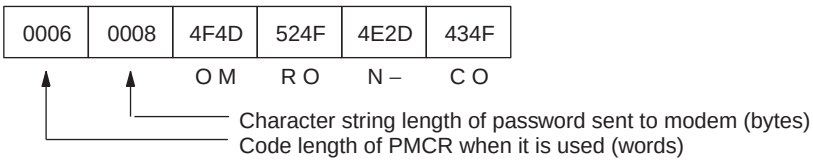

Password Verification Operation

The number of retries is 3 for password verification.

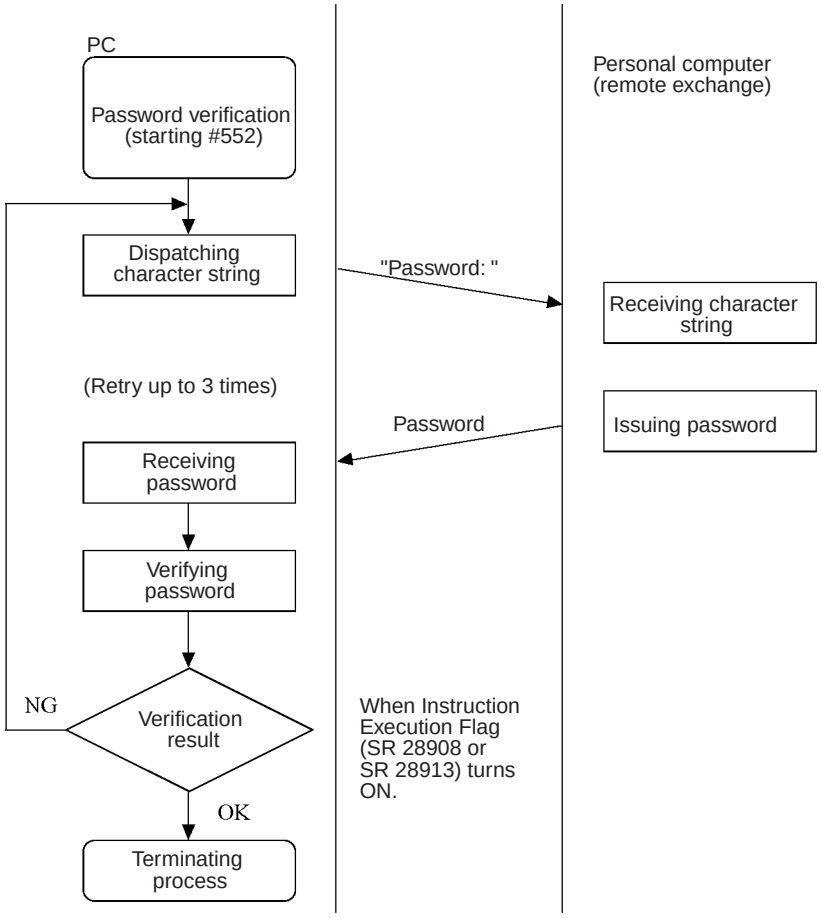

Data Send/Receive

Data Send/Receive can be executed using sequence No. 553. The send data sent to another exchange is set in the words specified by the second operand of PMCR. Data received by the PC is stored in the words specified by the third operand of PMCR.

Operand and Word Settings of PMCR

Operand 1	#x553 (x: Communications port)
Operand 2	First address C1 of the words where send data is set
Operand 3	First address C2 of the words where receive data is stored

- **Operand 2**

C1+0	Number of words from address set for operand 2 to end of data	4 digits BCD
C1+1	Number of bytes of send data	4 digits BCD
C1+2 : C1+n	Send data (dialling operation) (Fill data to left for odd numbers of bytes)	ASCII

- **Operand 3**

C2+0	Number of bytes of receive data	4 digits BCD
C2+1 : C2+n	Receive data (dialling operation) (Fill data to left for odd numbers of bytes)	ASCII

Setting Example

When send data is THIS IS SAMPLE.

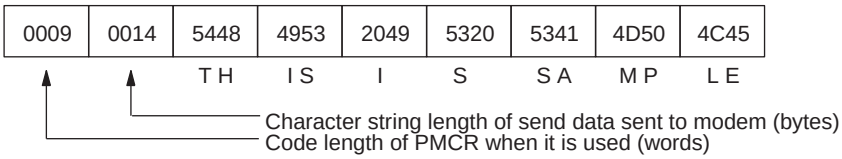

A maximum of 200 bytes (including the CR) can be received. When the received data is RETURN OK, the content stored in the receive words is as follows:

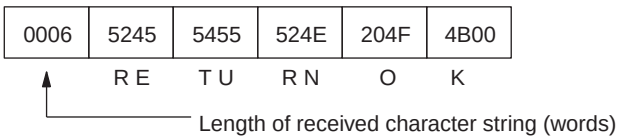

Note An error will occur is the reception data is not received within 90 seconds after the data is sent.

Escape Mode

Shifting to the escape mode can be made using sequence No. 554. No setting is necessary for this sequence.

Note The character string to shift the online mode to the escape mode (i.e., the escape code) is '+' for modem settings.

Hang Up Command

The hang up command (to disconnect the line) can be executed using sequence No. 555. No setting is necessary for this sequence.

Communication Errors

Three result codes are monitored after an AT command is sent to the modem. When a result code is returned, it will be checked. If the code is not the normal result code ("OK", "CONNECT 9600/REL4", "CONNECT 2400/REL4", in words), after a fixed time of waiting to send, the following retry processing will be repeated 2 times to send the AT command again and waiting for another result code.

The receive monitoring time and send wait time for each sequence are shown below.

Sequence No.	Sequence name	Receive monitoring time	Send wait time for retries
#550	Initialize modem (general-purpose)	10 s	1 s
#560	Initialize modem (specialized)	10 s	1 s
#570			
#580			
#561	Dial	90 s	90 s
#571			
#581			
#552	Password	None	3 s
#553	Data send/receive (general-purpose)	90 s	None
#554	Escape	10 s	1.5 s (after first try)
#555	Hang up	10 s	1.5 s (after first try)
#562	Initialize and dial	90s	Initializing: 1 s Dialling: 90 s
#572			
#582			
#590	Escape and hang up	10 s	1.5 s (after first try)

Index

Numerics

1:1 Data Link, 3, 4, 6, 109
  functions, 110
  ports
    connections, 112
  specifications, 111
  starting, 110
1:1 NT Link, 3, 4, 7
1:N NT Link, 3, 4, 7
  errors, 132
2-wire and 4-wire connections
  transmission circuits, 19
2-wire or 4-wire switch, 13
3Z4L Laser Micrometer, 63
  connections, 321
  protocols
    sequences, 319

A

applications
  precautions, xiii

B

B500-AL001-E Link Adapter, 22
bar code reader
  connections, 103
Bar Code Readers, 5
baud rate
  no-protocol communications, 102
  protocol macros, 59

C

C200H Communications Boards, 55
C200HX/HG/HE Communications Board
  changes in communications specifications, 55
cables, 12, 13
  preparation, 23
  See also installation
cleaning, 133
C-mode commands, 5
communications distance
  Host Link, 36
  protocol macros, 59
communications ports
  See also ports
communications sequences, 84
  See also PMCR(—) instructions, protocol macros, standard system protocols
  See also sequences
comparison
  previous products, 55
components
  names and functions, 10
CompoWay/F
  protocols, 63
CompoWay/F Master
  command and response formats, 140
  communications specifications, 140
  connections, 153
  message frames, 145
  protocols, 144
    sequences, 139, 144
  transmission procedure, 140
connectors, 12, 13, 17, 26
  connector hoods, 26
  cover dimensions, 15
  See also installation
  wiring, 23
CPU Units
  supporting CPU Units, 8
CS1-series CPU Units
  changes in communications specifications, 54, 55
CS1-series Serial Communications Unit/Board
  changes in communications specifications, 54, 55
C-series CPU Units
  changes in communications specifications, 54
C-series Host Link Units
  changes in communications specifications, 53, 55
current consumption, 8
CVM1 CPU Units
  changes in communications specifications, 54, 55
CVM1 Host Link Units
  changes in communications specifications, 54, 55
CV-series CPU Units
  changes in communications specifications, 54, 55
CV-series Host Link Units
  changes in communications specifications, 54, 55
CX-Protocol, 5, 37, 66, 102, 111, 118

D

dimensions, 8
  Serial Communications Boards, 15

E

E5_J Temperature Controller, 63
  connections, 232
  protocols
    sequences, 231
E5_K Digital Controller, 63
  connections
    read, 156
    write, 156
  read protocols
    sequences, 155, 173
E5ZE Temperature Controller, 63
  connections
    read, 190
    write, 190
  read protocols
    sequences, 189
  write protocols
    sequences, 211
EC Directives, xv
EMI measures, xv

error check codes
Host Link, 36
errors
1:N NT Link, 132
error codes, 30, 81, 84, 107
error flags, 30
flags, 123
Host Link, 124
end codes, 52
indicators, 122
protocol macros, 127
troubleshooting, 124
ES100 Digital Controller
connections, 246
protocols
sequences, 245
Executed Reception Case No. (code), 82
external dimensions
connector cover, 15

F

F200/F300/F350 Visual Inspection Unit, 63
ferrite cores, xvi
flags, 30
errors, 123
Frame Check Sequence
See also frames, FCS
frames
dividing
precautions, 45
FCS, 46

H

Hayes Modem AT Command, 63
compatible modems, 404
connections, 404
protocols
sequences, 403
heat-shrinking tubes, 25
Host Link, 3, 5, 33
commands, 5, 51
communications
procedures, 45
end codes, 52
errors, 124
host-initiated communications, 34
PC-initiated communications, 34
ports
connections, 39
specifications, 36
transmission delay, 50
unit number setting, 29
Host Link Units
changes in communications specifications, 55

I

indicators
CPU Unit, 11
error displays, 122
Serial Communications Boards, 10
inspection, 134
installation
1:1 Data Link
connections, 112
cables
Host Link, 44
Host Link
connections, 39
preparing cables, 44
mounting location, 4
no-protocol communications
connections, 103
NT Links
connections, 119
protocol macros
connections, 70
Serial Communications Boards, 14
instructions
PMCR(—), 84, 88
RXD(—), 104, 106
TXD(—), 34, 104, 106
Intelligent Signal Processors, 5

K

K3T_ Intelligent Signal Processor
connections, 287
protocols
sequences, 285

L

Link Adapters, 19, 22, 23, 40, 72
link words
settings, 29

M

maintenance, 121
cleaning, 133
inspection, 134
memory
allocations, 27
messages
no-protocol communications, 101
modems, 5
compatibility, 404
settings, 405
mounting height, 15

N

noise reduction, 18
no-protocol communications, 3, 4, 6, 99
overview, 100
ports
connections, 103

specifications, 100
NT Link commands, 7
NT Links, 115
1:1, 116
1:N, 116
commands, 116
overview, 116
ports
connections, 119
NT-AL001-E Link Adapter
DIP switch settings, 19

O

operating environment
precautions, xiii
operation
basic procedure, 8
procedure
1:1 Data Link, 111
Host Link, 36
no-protocol communications, 102
NT Links, 118
protocol macros, 66

P

PC Setup, 8, 28, 130
link words
1:1 Data Link, 110
standard settings
1:1 Data Link, 112
Host Link, 37
no-protocol communications, 102
NT Links, 118
protocol macros, 67
PC-initiated communications, 34
PMCR(—) instruction, 84, 145
operand settings, 88
specifications, 84
ports, 8
See also RS-232C ports
See also RS-422A/485 ports
settings, 29
power supply, 8
precautions
applications, xiii
Board replacement, 135
Forced Abort Bit, 94
general, xii
installing Serial Communications Boards, 16
noise reduction, 18
NT Links, 116
operating environment, xiii
replacement, 135
safety, xii
wiring, 18
previous products
comparison, 55
program examples
1:1 Data Link, 113
Host Link, 48
no-protocol communications, 107
NT Links, 116
protocol macros, 86, 87
protocol macros, 3, 5, 57
applications, 84
errors, 127
flags and control bits, 80
functions, 58
ladder programs, 86
ports
connections, 70
specifications, 59
standard system protocols, 63
transmission methods, 90
protocols, 4, 138
3Z4L Laser Micrometer
sequences, 319
CompoWay/F
sequences, 139
creating, 64
E5_J Temperature Controller
sequences, 231
E5_K Digital Controller read
sequences, 155, 173
E5ZE Temperature Controller read
sequences, 189
E5ZE Temperature Controller write
sequences, 211
ES100 Digital Controller
sequences, 245
Hayes Modem AT Command
sequences, 403
Host Link, 45
K3T_ Intelligent Signal Processor
sequences, 285
Protocol Support Software
list, 138
See also standard system protocols
structure, 76
V500/V520 Bar Code Reader
sequences, 307
V600/V620 ID Controller
sequences, 367
Visual Inspection System
sequences, 349

R

reception case number, 31, 82
reception counter, 31, 100
reception matrixes, 77
repeat counter, 31
RS-232C
communications
one-to-one link, 110
connecting Units, 110
RS-232C connections, 153
RS-232C ports
1:1 connections, 71
1:N connections, 73

changes from previous products, 53
connector pin layout, 11
host computer connections, 40
specifications, 11
wiring, 20
RS-422 connections, 154
RS-422A/485 ports
1:1 connections, 74
1:N connections, 75
changes from previous products, 55
host computer connections, 42
specifications, 12
wiring, 21
RS-485 connections, 154
RXD(—) instruction, 104, 106

S

safety precautions
See also precautions
sequences
CompoWay/F Master
Broadcast with ASCII Conversion, No Response (Sequence No. 601), 148
Broadcast with No Conversion and No Response (Sequence No. 603), 150
General-purpose Broadcast with No Conversion and No Response (Sequence No. 605), 152
General-purpose Send with No Conversion and with Response (Sequence No. 604), 151
Send with ASCII Conversion, with Response (Sequence No. 600), 145
Send with No Conversion and with Response (Sequence No. 602), 149
sequences, 3Z4L Laser Micrometer
3Z4L Clear (Sequence No. 400), 324
3Z4L Initialize (3000-series) (Sequence No. 430), 340
3Z4L Initialize (4000-series) (Sequence No. 443), 346
All Statistic Memory Clear (3000-series) (Sequence No. 418), 335
Automatic Detection List Request (3000-series) (Sequence No. 429), 339
Automatic Detection Release (3000-series) (Sequence No. 428), 339
Automatic Detection Set (3000-series) (Sequence No. 427), 339
AVG Move (H) Times Set (3000-series) (Sequence No. 425), 338
AVG Move (L) Times Set (3000-series) (Sequence No. 426), 338
AVG Move Interval Set (3000-series) (Sequence No. 424), 338
Calibration Release (Sequence No. 405), 326
Calibration Set (Sequence No. 404), 326
Continuous Measurement Start (Interrupt) (3000-series) (Sequence No. 413), 334
Continuous Measurement Start (Interrupt) (4000-series) (Sequence No. 437), 345
Continuous Measurement Start (Scan) (3000-series) (Sequence No. 412), 333
Continuous Measurement Start (Scan) (4000-series) (Sequence No. 436), 345
Continuous Measurement Termination (4000-series) (Sequence No. 438), 346
Data Request (3000-series) (Sequence No. 415), 334
Data Request (4000-series) (Sequence No. 439), 346
Deflection Measurement Start (4000-series) (Sequence No. 435), 345
E Unit Set (Sequence No. 403), 325
Forced Negative Zero (4000-series) (Sequence No. 441), 346
Forced Positive Zero (4000-series) (Sequence No. 440), 346
Forced Zero Release (4000-series) (Sequence No. 442), 346
General-purpose Command 1 (4000-series) (Sequence No. 444), 347
General-purpose Command 2 (4000-series) (Sequence No. 445), 348
Measurement Condition List Request (3000-series) (Sequence No. 409), 330
Measurement Condition List Request (4000-series) (Sequence No. 433), 343
Measurement Condition Release (3000-series) (Sequence No. 408), 330
Measurement Condition Release (4000-series) (Sequence No. 432), 343
Measurement Condition Set (3000-series) (Sequence No. 407), 327
Measurement Condition Set (4000-series) (Sequence No. 431), 341
Measurement Termination (3000-series) (Sequence No. 414), 334
Memory Switch Set (Sequence No. 401), 325
Memory Switch Set 1 (3000-series) (Sequence No. 421), 336
Memory Switch Set 2 (3000-series) (Sequence No. 422), 337
mm Unit Set (Sequence No. 402), 325
Program Number Set (3000-series) (Sequence No. 406), 327
Settings, 322
Simple AVG Times Set (3000-series) (Sequence No. 423), 337
Single Run Measurement Start (3000-series) (Sequence No. 410), 333
Single Run Measurement Start (4000-series) (Sequence No. 434), 344
Statistic Processing Calculation Non-execution (3000-series) (Sequence No. 417), 335
Statistic Processing Execution (3000-series) (Sequence No. 416), 334
Statistic Processing Memory Clear (3000-series) (Sequence No. 419), 335
Statistic Result Request (3000-series) (Sequence No. 420), 335
Zero Run Measurement Start (3000-series) (Sequence No. 411), 333
sequences, E5_J Temperature Controller
General-purpose Read (Sequence No. 216), 243
General-purpose Write (Sequence No. 216), 243
Read Heater Current (Sequence No. 214), 242
Read Initial Status (Sequence No. 215), 242
Read Input Shift Value (Sequence No. 210), 240
Read Output Value (Sequence No. 211), 241
Read Parameters 1 (Sequence No. 208), 238
Read Parameters 2 (Sequence No. 209), 239
Read Process Value (Sequence No. 212), 241
Read Set Point Limit (Sequence No. 213), 241
Save Set Point (Sequence No. 204), 235
Select Backup Mode (Sequence No. 202), 234
Select Local Mode (Sequence No. 201), 234
Select RAM Write Mode (Sequence No. 203), 235
Select Remote Mode (Sequence No. 200), 234
Write Input Shift Value (Sequence No. 207), 237
Write Parameters 1 (Sequence No. 205), 235
Write Parameters 2 (Sequence No. 206), 236
sequences, E5_K Digital Controller
Execute/Cancel AT (Sequence No. 074), 186
General-purpose Read (Sequence No. 023), 172
General-purpose Write (Sequence No. 070), 184

Read Alarm Hysteresis (Sequence No. 016), 164
Read Alarm Value (Sequence No. 004), 159
Read Control Period (Sequence No. 010), 161
Read Cooling Coefficient (Sequence No. 006), 160
Read Dead Band (Sequence No. 007), 160
Read Hysteresis (Sequence No. 009), 161
Read Input Digital Filter (Sequence No. 015), 163
Read Input Shift Limits (Sequence No. 017), 164
Read LBA Detection Time (Sequence No. 012), 162
Read Level 0 Parameters (Sequence No. 018), 165
Read Level 1 Parameters 1 (Sequence No. 019), 166
Read Level 1 Parameters 2 (Sequence No. 020), 167
Read Level 2 Parameters 1 (Sequence No. 021), 169
Read Level 2 Parameters 2 (Sequence No. 022), 170
Read Manual Reset Value (Sequence No. 008), 160
Read MV (Sequence No. 002), 158
Read MV at Stop Time and at PV Error (Sequence No.013), 162
Read MV Limits (Sequence No. 014), 163
Read Process Value (Sequence No. 000), 157
Read Proportional Band, Integral Time, and Derivative Time (Sequence No. 005), 159
Read Set Point (Sequence No. 003), 158
Read Set Point during SP Ramp (Sequence No. 001), 157
Read SP Ramp Time Unit and Set Value (Sequence No. 011), 162
Remote/Local (Sequence No. 073), 185
Run/Stop (Sequence No. 072), 185
Software Reset (Sequence No. 076), 187
Switch to Level 0 (Software Reset) (Sequence No. 071), 184
Switch to Level 1 (Sequence No. 075), 187
Write Alarm Hysteresis (Sequence No. 063), 178
Write Alarm Value (Sequence No. 051), 174
Write Control Period (Sequence No. 057), 176
Write Cooling Coefficient (Sequence No. 053), 175
Write Dead Band (Sequence No. 054), 175
Write Hysteresis (Sequence No. 056), 176
Write Input Digital Filter (Sequence No. 062), 178
Write Input Shift Value (Sequence No. 064), 178
Write LBA Detection Time (Sequence No. 059), 177
Write Level 0 Parameters (Sequence No. 065), 179
Write Level 1 Parameter 2 (Sequence No. 067), 181
Write Level 1 Parameters 1 (Sequence No. 066), 180
Write Level 2 Parameters 1 (Sequence No. 068), 182
Write Level 2 Parameters 2 (Sequence No. 069), 183
Write Manual Reset Value (Sequence No. 055), 175
Write MV at Stop Time and at PV Error (Sequence No. 060), 177
Write MV Limits (Sequence No. 061), 177
Write Proportional Band, Integral Time, and Derivative Time (Sequence No. 052), 174
Write Set Point (Sequence No. 050), 174
Write SP Ramp Time Unit and Set Value (Sequence No. 058), 176

sequences, E5ZE Temperature Controller
Cancel Autotuning (Sequence No. 160), 220
Initialize Settings (Sequence No. 169), 225
Read Alarm Mode (Sequence No. 107), 198
Read Alarm Temperatures (Sequence No. 108), 199
Read Control Period (Sequence No. 105), 197
Read Cooling Coefficient (Sequence No. 123), 209
Read Dead Band/Overlap Band (Sequence No. 122), 209
Read Error Status (Sequence No. 111), 201
Read HB Alarm and HS Alarm Valid Channels (Sequence No. 119), 207
Read Heater Burnout and SSR Failure Detection Currents (Sequence No. 120), 207
Read Heater Current and SSR Leakage Current (Sequence No.121), 208
Read Hysteresis (Sequence No. 109), 200
Read Input Shift Value (Sequence No. 113), 202
Read Manual Reset Value (Sequence No. 114), 203
Read Operation Status (Sequence No. 110), 201
Read Output Mode (Sequence No. 106), 198
Read Output Value Change Rate Limit (Sequence No. 118), 206
Read Output Value Limit (Sequence No. 117), 205
Read Output Values (Sequence No. 102), 195
Read Present Set Point (Sequence No. 116), 204
Read Process Value (Sequence No. 101), 194
Read Proportional Band, Integral Time, and Derivative Time (Sequence No. 104), 197
Read Ramp Value (Sequence No. 115), 203
Read Set Point (Sequence No. 100), 194
Read Set Point, Process Value, and Output Value (Sequence No. 103), 196
Read Setting Unit (Sequence No. 112), 202
Save Settings (Sequence No. 168), 225
Start Autotuning (Sequence No. 159), 219
Start Control (Sequence No. 174), 228
Start Manual Operation (Sequence No. 176), 229
Stop Operation or Control (Sequence No. 175), 228
Write Alarm Mode (Sequence No. 155), 216
Write Alarm Temperature (Setting Unit 0.1) (Sequence No. 157), 218
Write Alarm Temperature (Setting Unit 1) (Sequence No. 156), 217
Write Control Period (Sequence No. 153), 215
Write Cooling Coefficient (Sequence No. 173), 227
Write Dead Band/Overlap Band (Sequence No. 172), 227
Write HB and HS Alarm Valid Channels (Sequence No. 170), 226
Write Heater Burnout and SSR Failure Detection Current (Sequence No. 171), 226
Write Hysteresis (Sequence No. 158), 219
Write Input Shift Value (Sequence No. 162), 220
Write Manual Output Value (Sequence No. 165), 222
Write Manual Reset Value (Sequence No. 163), 221
Write Output Mode (Sequence No. 154), 216
Write Output Value Change Rate Limit (Sequence No. 167), 224
Write Output Value Limit (Sequence No. 166), 223
Write Proportional Band, Integral Time, and Derivative Time (Sequence No. 152), 214
Write Ramp Value (Sequence No. 164), 222
Write Set Point (Setting Unit 0.1) (Sequence No. 151), 213
Write Set Point (Setting Unit 1) (Sequence No. 150), 212
Write Setting Unit (Sequence No. 161), 220

sequences, ES100_ Digital Controller
Auto Mode (Sequence No. 273), 278
Cancel A.T. (Sequence No. 276), 280
Change Bank No. (Sequence No. 278), 281
Change Pattern No. (Sequence No. 277), 281
Execute A.T. (Sequence No. 275), 279
External Setting Mode (Sequence No. 270), 276
General-purpose Command (Sequence No. 280), 283
Local Setting Mode (Sequence No. 269), 276
Manual Mode (Sequence No. 274), 279
Read Adjustment Parameters (Sequence No. 258), 258
Read Control Monitor Data (Sequence No. 257), 256
Read Controller Status (Sequence No. 279), 282
Read Error Detection Data (Sequence No. 252), 250
Read Event Data (Sequence No. 250), 248
Read Heater Burnout Data (Sequence No. 253), 252
Read Local SP (Sequence No. 264), 269
Read MV Data (Sequence No. 256), 255

Read PID Control Parameters 1 (Sequence No. 260), 262
Read PID Control Parameters 2 (Sequence No. 261), 264
Read Program Parameters (Sequence No. 266), 272
Read PV Data (Sequence No. 254), 253
Read SP Data (Sequence No. 255), 254
Read Time Signal (Sequence No. 251), 249
Remote Setting Mode (Sequence No. 268), 275
Reset (Stop) (Sequence No. 272), 278
Run Command (Sequence No. 271), 277
Write Adjustment Parameters (Sequence No. 259), 261
Write Local SP (Sequence No. 265), 271
Write PID Control Parameters 1 (Sequence No. 262), 266
Write PID Control Parameters 2 (Sequence No. 263), 268
Write Program Parameters (Sequence No. 267), 274

sequences, Hayes Modem AT Command
Data Send/Receive (General-purpose) (Sequence No. 553), 408
Dial (Sequence No. 561), 406
Dial (Sequence No. 571), 406
Dial (Sequence No. 581), 406
Escape (Sequence No. 554), 409
Escape to Hang Up (Sequence No. 590), 403
Hang Up (Sequence No. 555), 409
Initialize and Dial (Sequence No. 562), 403
Initialize and Dial (Sequence No. 572), 403
Initialize and Dial (Sequence No. 582), 403
Initialize Modem (Specialized) (Sequence No. 560), 405
Initialize Modem (Specialized) (Sequence No. 570), 405
Initialize Modem (Specialized) (Sequence No. 580), 405
Password (Sequence No. 552), 407
Set Modem (General-purpose) (Sequence No. 550), 405

sequences, K3T_ Intelligent Signal Processor
General-purpose Command (Sequence No. 339), 305
Model Data Read (by Unit Number) (Sequence No. 337), 303
Model Data Read (Continuous Units) (Sequence No. 338), 304
Read Display Value (PV) (by Unit Number) (Sequence No. 335), 301
Read Display Value (PV) (Continuous Units) (Sequence No. 336), 303
Read Holding Data (Sequence No. 332), 299
Read Holding Data BH (Continuous Units) (Sequence No. 334), 301
Read Holding Data PH (Continuous Units) (Sequence No. 333), 300
Read Set Value (by Unit Number) (Sequence No. 317), 295
Read Set Value H (Continuous Units) (Sequence No. 319), 296
Read Set Value H with Bank (Continuous Units) (Sequence No. 324), 298
Read Set Value HH (Continuous Units) (Sequence No. 318), 296
Read Set Value HH with Bank (Continuous Units) (Sequence No. 323), 298
Read Set Value L (Continuous Units) (Sequence No. 320), 296
Read Set Value L with Bank (Continuous Units) (Sequence No. 325), 298
Read Set Value LL (Continuous Units) (Sequence No. 321), 296
Read Set Value LL with Bank (Continuous Units) (Sequence No. 326), 298
Read Set Value O1 with Bank (Continuous Units) (Sequence No. 331), 299
Read Set Value O2 with Bank (Continuous Units) (Sequence No. 330), 299
Read Set Value O3 with Bank (Continuous Units) (Sequence No. 329), 299
Read Set Value O4 with Bank (Continuous Units) (Sequence No. 328), 298
Read Set Value O5 with Bank (Continuous Units) (Sequence No. 327), 298
Read Set Value with Bank (by Unit Number) (Sequence No. 322), 297
Reset (by Unit Number) (Sequence No. 300), 290
Reset Control (Continuous Units) (Sequence No. 301), 290
Write Set Value (by Unit Number) (Sequence No. 302), 291
Write Set Value H (Continuous Units) (Sequence No. 304), 292
Write Set Value H with Bank (Continuous Units) (Sequence No. 309), 294
Write Set Value HH (Continuous Units) (Sequence No. 303), 291
Write Set Value HH with Bank (Continuous Units) (Sequence No. 308), 293
Write Set Value L (Continuous Units) (Sequence No. 305), 292
Write Set Value L with Bank (Continuous Units) (Sequence No. 310), 294
Write Set Value LL (Continuous Units) (Sequence No. 306), 292
Write Set Value LL with Bank (Continuous Units) (Sequence No. 311), 294
Write Set Value O1 with Bank (Continuous Units) (Sequence No. 316), 295
Write Set Value O2 with Bank (Continuous Units) (Sequence No. 315), 295
Write Set Value O3 with Bank (Continuous Units) (Sequence No. 314), 294
Write Set Value O4 with Bank (Continuous Units) (Sequence No. 313), 294
Write Set Value O5 with Bank (Continuous Units) (Sequence No. 312), 294
Write Set Value with Bank (by Unit Number) (Sequence No. 307), 292

sequences, V500/V520 Bar Code Reader
BCR Connection Confirmation (V500) (Sequence No. 358), 315
BCR Function Read (V500) (Sequence No. 355), 313
BCR Function Write (V500) (Sequence No. 354), 311
BCR Initialize (V500) (Sequence No. 362), 316
BCR Read Start (Sequence No. 350), 310
BCR Read Stop (Sequence No. 351), 310
Complete Data Read (Sequence No. 353), 311
Data Continuous Read (Interrupt) (V500) (Sequence No. 361), 316
Data Continuous Read (Interrupt) (V520) (Sequence No. 364), 317
Data Continuous Read (Scan) (V500) (Sequence No. 360), 316
Data Continuous Read (Scan) (V520) (Sequence No. 363), 316
Data Read (Sequence No. 352), 311
General-purpose Command 1 (Sequence No. 365), 317
General-purpose Command 2 (Sequence No. 366), 318
Log Data Clear (V500) (Sequence No. 359), 316
Log Data Output Request (V500) (Sequence No. 356), 314
Preset Data Set (V500) (Sequence No. 357), 315
System Setting, 310

sequences, V600/V620 ID Controller
Auto-read (ASCII/1) (Sequence No. 508), 382
Auto-read (Hexadecimal/1) (Sequence No. 509), 383
Auto-write (ASCII/1) (Sequence No. 526), 395
Auto-write (Hexadecimal/1) (Sequence No. 527), 395
Command Processing Cancel (Sequence No. 543), 400
Control (Sequence No. 541), 399
Data Check (Sequence No. 540), 398

Error Information Read (Sequence No. 542), 400
General-purpose Command (Sequence No. 546), 402
Polling Auto-read (ASCII) (Sequence No. 510), 383
Polling Auto-read (ASCII/2) (Sequence No. 511), 384
Polling Auto-read (ASCII/4) (Sequence No. 512), 384
Polling Auto-read (ASCII/4) (Sequence No. 513), 384
Polling Auto-read (Hexadecimal) (Sequence No. 514), 385
Polling Auto-read (Hexadecimal/2) (Sequence No. 515), 385
Polling Auto-read (Hexadecimal/4) (Sequence No. 516), 386
Polling Auto-read (Hexadecimal/8) (Sequence No. 517), 386
Polling Auto-read Command Processing Cancel (Sequence No. 544), 401
Polling Auto-write (ASCII/2) (Sequence No. 528), 395
Polling Auto-write (ASCII/4) (Sequence No. 530), 396
Polling Auto-write (ASCII/8) (Sequence No. 532), 396
Polling Auto-write (Hexadecimal/2) (Sequence No. 534), 397
Polling Auto-write (Hexadecimal/4) (Sequence No. 536), 397
Polling Auto-write (Hexadecimal/8) (Sequence No. 538), 398
Polling Auto-write Command Processing Cancel (Sequence No. 545), 401
Polling Auto-write Subcommand (ASCII/2) (Sequence No. 529), 396
Polling Auto-write Subcommand (ASCII/4) (Sequence No. 531), 396
Polling Auto-write Subcommand (ASCII/8) (Sequence No. 533), 396
Polling Auto-write Subcommand (Hexadecimal/2) (Sequence No. 535), 397
Polling Auto-write Subcommand (Hexadecimal/4) (Sequence No. 537), 397
Polling Auto-write Subcommand (Hexadecimal/8) (Sequence No. 539), 398
Read (ASCII/1) (Sequence No. 500), 374
Read (ASCII/2) (Sequence No. 501), 375
Read (ASCII/4) (Sequence No. 502), 376
Read (ASCII/8) (Sequence No. 503), 377
Read (Hexadecimal/1) (Sequence No. 504), 378
Read (Hexadecimal/2) (Sequence No. 505), 379
Read (Hexadecimal/4) (Sequence No. 506), 380
Read (Hexadecimal/8) (Sequence No. 507), 381
Write (ASCII/1) (Sequence No.518), 386
Write (ASCII/2) (Sequence No. 519), 387
Write (ASCII/4) (Sequence No. 520), 389
Write (ASCII/8) (Sequence No. 521), 390
Write (Hexadecimal/1) (Sequence No. 522), 391
Write (Hexadecimal/2) (Sequence No. 523), 392
Write (Hexadecimal/4) (Sequence No. 524), 393
Write (Hexadecimal/8) (Sequence No. 525), 394

sequences, Visual Inspection System
Arbitrary Measurement Value Acquisition (F200) (Sequence No. 457), 355
Binary Level Modification (F200/300) (Sequence No. 482), 364
Camera Change (Decrease by 1) (F200/300) (Sequence No. 480), 364
Camera Change (Increase by 1) (F200/300) (Sequence No. 481), 364
Camera Designation and Positioning (F350) (Sequence No. 471), 362
Character String Inspection and Character Inspection (F350) (Sequence No. 474), 363
Continuous Measurement Execution (Interrupt) (F200) (Sequence No. 452), 353
Continuous Measurement Execution (Interrupt) (F300) (Sequence No. 462), 359
Continuous Measurement Execution (Scan) (F200) (Sequence No. 451), 352
Continuous Measurement Execution (Scan) (F300) (Sequence No. 461), 357
Evaluation Condition Change (F200) (Sequence No. 456), 354
General-purpose Command (Send) (Sequence No. 494), 365
General-purpose Command (Send/Receive) (Sequence No. 495), 366
Illumination Fluctuation Follow Execution (F300) (Sequence No. 465), 361
Inspection Execution and Character Inspection (F350) (Sequence No. 473), 363
Measurement Execution (F200) (Sequence No. 450), 352
Measurement Execution (F300) (Sequence No. 460), 356
Measurement Execution and Positioning (F350) (Sequence No. 470), 361
Measurement, Inspection Termination (Sequence No. 493), 365
Reference Object Registration (Criterion) (F200) (Sequence No. 455), 354
Reference Object Registration (Group) (F200) (Sequence No. 453), 354
Reference Object Registration (Reference Position) (F200) (Sequence No. 454), 354
Reference Object Registration Command 1 Execution (F300) (Sequence No. 463), 360
Reference Object Registration Command 2 Execution (F300) (Sequence No. 464), 361
Reset (F200/300) (Sequence No. 483), 364
Scene Switching (Arbitrary) (Sequence No. 492), 365
Scene Switching (Decrease by 1) (Sequence No. 490), 364
Scene Switching (Increase by 1) (Sequence No. 491), 365
Scene Switching and Positioning (F350) (Sequence No. 472), 363

Serial Communications Boards
error information, 123
installation, 14
replacement, 135
specifications, 8

serial communications modes
1:1 Data Link, 3, 4, 6, 110
1:1 NT Link, 3, 4, 7
1:N NT Link, 3, 4, 7
Host Link, 3, 5, 34
no-protocol, 2, 4, 6, 100
NT Link, 116
protocol macro, 3, 5, 58
setting, 29

settings
flags and control bits, 27
See also PC Setup
switches, 13

soldering, 25

specifications
Serial Communications Boards, 8

standard system protocols, 63, 137
communications problems, 79
examples, 78
modifying, 64

switches, 13

synchronization
RS-232C ports, 11
RS-422A/485 ports, 12

SYSMAC WAY
See also Host Link

T

Temperature Controllers, 5
terminating resistance switch, 13
trace function
  protocol macros, 63
troubleshooting, 121, 124
  1:N NT Link errors, 132
  Host Link errors, 124
  protocol macro errors, 127
TXD(—) instruction, 34, 104, 106
  Host Link, 36

V

V500/V520 Bar Code Reader, 63
  connections, 309
  protocols
    sequences, 307
V600/V620 ID Controller, 63
  connections, 369
  protocols
    sequences, 367
Visual Inspection System
  connections, 351
  protocols
    sequences, 349
Visual Inspection Units, 63

W

weight, 8
wiring, 17
  connectors, 23
  precautions, 18
  RS-232C ports, 20
  RS-422A/485 ports, 21

Revision History

A manual revision code appears as a suffix to the catalog number on the front cover of the manual.

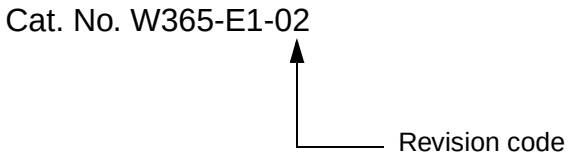

The following table outlines the changes made to the manual during each revision. Page numbers refer to the previous version.

Revision code	Date	Revised content
01	September 1999	Original production
02	April 2002	The following changes were made. **Page xiii:** Line added to warning. **Page 22:** Third graphic changed. **Page 23:** Graphic added before note. **Page 29:** Information added to second row. **Pages 32, 71:** Note added. **Page 88:** Text in graphic changed in one place. **Page 95:** Information added after graphics. **Page 126:** New row inserted after first row. **Page 127:** Changes made to bottom table. **Page 147:** “#0000” changed to “000.” **Page 287:** Changes made to *Note 1*. **Pages 289, 290, 291, 292, 295, 298, 300:** “Most significant bit” changed to “5th digit BCD.”

OMRON CORPORATION
FA Systems Division H.Q.
66 Matsumoto
Mishima-city, Shizuoka 411-8511
Japan
Tel: (81)559-77-9181/Fax: (81)559-77-9045

Regional Headquarters

OMRON EUROPE B.V.
Wegalaan 67-69, NL-2132 JD Hoofddorp
The Netherlands
Tel: (31)2356-81-300/Fax: (31)2356-81-388

OMRON ELECTRONICS LLC
1 East Commerce Drive, Schaumburg, IL 60173
U.S.A.
Tel: (1)847-843-7900/Fax: (1)847-843-8568

OMRON ASIA PACIFIC PTE. LTD.
83 Clemenceau Avenue,
#11-01, UE Square,
Singapore 239920
Tel: (65)6835-3011/Fax: (65)6835-2711

OMRON

Authorized Distributor:

Cat. No. W365-E1-02

Note: Specifications subject to change without notice.

Printed in Japan

Cat. No. W365-E1-02 SYSMAC CQM1H-series Serial Communications Board OPERATION MANUAL OMRON