OMRON

TYPE 3G3RX-□-E1F

Customised to your machine

INSTRUCTION MANUAL

Thank you for purchasing 3G3RX inverter.

To ensure safe operation, please be sure to read the safety precautions provided in this document along with all of the user manuals for the inverter. Please be sure you are using the most recent versions of the user manuals. Keep this instruction manual and all of the manuals in a safe location and be sure that they are readily available to the final user of the products.

Name	Cat. No.
RX Series User's Manual	I560-E2-05

OMRON Corporation NT209XF-EN

Names of Parts

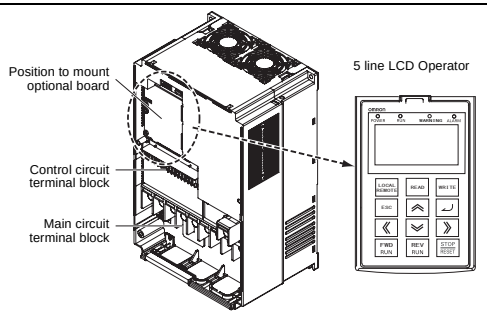

Installation and Wiring

■ Dimensions

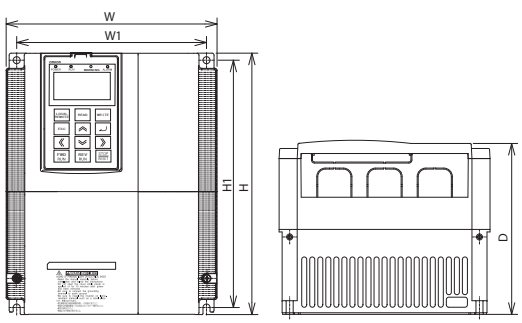

3G3RX-	W	W1	H	H1	D
A2004-E1F to A2037-E1F A4004-E1F to A4040-E1F	150	130	255	241	140
A2055-E1F to A2110-E1F A4055-E1F to A4110-E1F	210	189	260	246	170
A2150-E1F to A2220-E1F A4150-E1F to A4220-E1F	250	229	390	376	190
A2300-E1F, A4300-E1F	310	265	540	510	195
A2370-E1F, A2450-E1F A4370-E1F to A4550-E1F	390	300	550	520	250
A2550-E1F	480	380	700	670	250
B4750-E1F, B4900-E1F	390	300	700	670	270
B411K-E1F, B413K-E1F	480	380	740	710	270

[mm]

■ Standard Connection Diagram

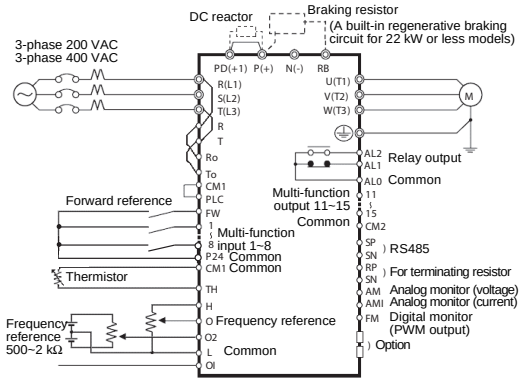

* Factory default settings for relay output are NC contact for AL1 and NO contact for AL2.

■ Terminal symbols, Screw size and Tightening Torque

Type 3G3RX-	Main Circuit			Option	Control Circuit	Relay
	R(L1),S(L2),T(L3),U(T1),V(T2),W(T3)	Ro,To	Ground (symbol)	PD(+1), P(+), N(-),RB	AM,AMI,H,O,O2,OI,L,FM, FW, 8, 7, 6, 5, 4, 3, 2, 1, CM1,PLC,P24,CM2,15,14,13,12,11,TH	AL0, AL1, AL2
A2004 to A2037 A4004 to A4040	M4	M4	M4	M4	M3	M3
A2055, A2075 A4055, A4075	M5		M5	M5		
A2110, A4110	M6		M5	M6		
A2150, A2185 A4150 to A4220	M6		M6	M6		
A2220	M8		M6	M8		
A2300	M8		M6	M8		
A4300	M6		M6	M6		
A2370	M8*		M8*	M8*		
A4370	M8*		M8*	M8*		
A2450	M8*		M8*	M8*		
A4450, A4550	M8*		M8*	M8*		
A2550 B4750 to B413K	M10		M8*	M10		

Screw Size	M3	M4	M5	M6	M8	M10
Torque	0.7 N·m (max. 0.8)	1.2 N·m (max. 1.4)	2.4 N·m (max. 4.0)	4.5 N·m (max. 4.9)	8.1 N·m (max. 8.8) *(max. 20.0)	20.0 N·m (max. 22.0)

Keys

	Name	Description
LOCAL REMOTE	Remote key	It changes form local to remote mode. Press the key during 2 seconds to switch between modes
⌃	Increment key	Changes the set values, parameters and Commands.
⌄	Decrement key	
«	Left cursor	
»	Right cursor	
FWD RUN	Forward RUN	Starts the operation in forward direction
REV RUN	Reverse RUN	Starts the operation in reverse direction
STOP RESET	STOP/RESET key	Stops the operation. Functions as the Reset key if an error occurs.
↵	Enter key	Enters and stores the data.
ESC	Escape key	Returns to the above layer

Parameter List

Parameter No.	Function name	Monitor or data range
d001	Output frequency monitor	0.00 to 400.00 Hz
d002	Output current monitor	0.0 to 9999.0 A
d003	Rotation direction monitor	FWD / STOP / REV
d004	PID feedback value monitor	0.0 to 999000.0 % (Valid when the PID function is selected.)
d007	Output frequency monitor (after conversion)	0.00 to 39960.00 (Output frequency × conversion factor of b086)
d008	Real frequency monitor	-400.00 to 400.00 Hz
d009	Torque reference monitor	-200 to +200 %
d010	Torque bias monitor	-200 to +200 %
d012	Output torque monitor	-200 to +200 %
d013	Output voltage monitor	0.0 to 600.0 V
d014	Input power monitor	0.0 to 999.9 KW
d015	Integrated power monitor	0.0 to 999999.9 KW
d016	Total RUN time	0 to 99999 hr
d017	Power ON time	0 to 99999 hr
d018	Fin temperature monitor	-20.0 to 200.0ºC
d019	Motor temperature monitor	-20.0 to 200.0ºC
d028	Pulse counter monitor	0 to 2147483647
d029	Position command monitor	-1073741823 to 1073741823
d030	Current position monitor	-1073741823 to 1073741823
d080	Fault frequency monitor	0 to 65535
d081 to d086	Fault monitor1 (latest) ~ Fault monitor6	Error code (condition of occurrence), Trip factor, Output frequency, Output current, Internal DC voltage, RUN time, ON time
d090	Warning monitor	Warning code
d102	DC voltage monitor	0.0 to 999.9 VDC
d103	Regenerative braking load rate monitor	0.0 to 100.0%
d104	Electronic thermal monitor	0.0 to 100.0%
F001	Output frequency setting / monitor	0.00, Starting frequency to max. frequency (Hz), 0.00 to 100.00% (Valid when the PID function is selected.)
F002	Acceleration time1	0.01 to 3600.00 s
F003	Deceleration time1	0.01 to 3600.00 s
F004	Operator rotation direction selection	00:FWD /01:REV
A001	Frequency reference selection	00:VR (Digital Operator (volume) Enable when 3G3AX-OP01 is used) / 01:Terminal / 02:Operator (Digital operator F001) / 03:RS485 (Modbus communication) / 04:Option1 / 05:Option2 / 06:Pulse (Pulse train frequency) /07:EzSQ (Drive programming) / 10:Math (Frequency operation result)
A002	RUN command selection	01:Terminal / 02:Operator (Digital operator) / 03:RS485 (Modbus communication) / 04:Option1 / 05:Option2
A003	Base frequency	30 Hz to max. frequency [A004/A204/A304]
A203/A303	2nd/3rd Base frequency	
A004	Maximum frequency	30 to 400 Hz
A204/A304	2nd/3rd Max. frequency	
A005	O/OI selection	00: [O]/[OI] (Switch between O/OI via terminal AT) 01: [O]/[O2] (Switch between O/O2 via terminal AT) 02: [O]/VR (Switch between O/VR via terminal AT) 03: [OI]/VR (Switch between OI/VR via terminal AT) 04: [O2]/VR (Switch between O2/VR via terminal AT) (02 to 04:Enable when 3G3AX-OP01 is used)
A019	Multi-step speed selection	00: Binary(16) (16-step selection with 4 terminals) 01: Bit (8) (8-step selection with 7 terminals)
A020	Multi-step speed reference 0	0.00 / Starting frequency to max. frequency (Hz)
A021 to A035	Multi-step speed reference1~15	0.00 / Starting frequency to max. frequency (Hz)
A038	Jogging frequency	0.00 / Starting frequency to 9.99 Hz
A039	Jogging stop selection	00:FRS (Free running on jogging stop, Disabled in operation) / 01:DEC (Deceleration stop on jogging stop, Disabled in operation) / 02:DB (DC injection braking on jogging stop, Disabled in operation) / 03:FRS (RUN) (Free running on jogging stop, Enabled in operation) / 04:DEC (RUN) (Deceleration stop on jogging stop, Enabled in operation) / 05:DB (RUN) (DC injection braking on jogging stop, Enabled in operation)
A045	Output voltage gain	20 to 100%
A097/A098	Acceleration/ Deceleration pattern selection	00:Linear / 01:S curve / 02:U curve / 03:inv.U curve /04:EL-S curve
b001	Retry selection	00:Trip / 01:0Hz Start / 02:f-match (Frequency matching start) / 03:f-match-trip (Trip after frequency matching deceleration stop) / 04:Actv.f-match (Frequency pull-in restart)
b002	Allowable momentary power interruption time	0.3 to 25.0s
b083	Carrier frequency	0.5 to 15.0 KHz(0.4 to 55 kW) 0.5 to 10.0 KHz(75 to 132 kW)
b084	Initialization selection	00:no (Disable) / 01:Trip data (Clear the trip monitor) / 02:Parameters (Initialize data) / 03:Trp+Param (initialize Trip and data) / 04: Trp+Prm+EzSQ (Complete initialization)
b130	Overvoltage protection function selection during deceleration	00:OFF (Disable) / 01:V-const (DC voltage kept constant) / 02:Accel (Acceleration enabled)
b131	Overvoltage protection level during deceleration	200V class: 330 to 390 400V class: 660 to 780
C001 to C008	Multi-function input 1~8 selection	01:RV(reverse)/02~05:CF1~4(multi-step speed1~4)/ 06:JG(jogging)/07:DB(external DC injection braking)/ 08:SET(2nd control)/09:2CH(2-step acceleration/deceleration)/11:FRS (free run stop)/12:EXT(external trip)/ 13:USP(USP function)/14:CS(commercial switch)/ 15:SFT(soft lock)/16:AT(analog input switch)/17:SET3(3rd control)/18:RS(reset)/20:STA(3-wire start)/21:STP(3-wire stop)/22:F/R(3-wire forward/reverse)/23:PID(PID enable/ disable)/24:PIDC(PID integral/reset)/26:CAS(control gain switching)/27:UP(UP/DWN function accelerated)/ 28:DWN(UP/DWN function decelerated)/29:UDC(UP/ DWN function data clear)/31:OPE(forward operator)/ 32~38:SF1-7(multi-step speed bit1-7)/39:OLR(overload limit switching)/40:TL(torque limit enabled)/ 41:TRQ1(torque limit switching 1)/42:TRQ2(torque limit switching 2)/43:PPI(P/PI switching)/44:BOK(brake confirmation)/45:ORT(orientation)/46:LAC(LAD cancel)/ 47:PCLR(position deviation clear)/48:STAT(pulse train position command input permission)/50:ADD(frequency addition)/51:F-TM (forced terminal block)/52:ATR(torque command input permission)/53:KHC(integrated power clear)/54:SON(servo ON)/55:FOC(preliminary excitation)/ 56~63:MI1-MI8 (drive programming input 1-8)/ 65:AHD(analog command held)/66~68:CP1-3(position command selection 1-3)/69:ORL(zero return limit signal)/ 70:ORG(zero return startup signal)/71:FOT(forward driving stop)/72:ROT(reverse driving stop)/73:SPD(speed/position switching)/74:PCNT(pulse counter)/75:PCC(pulse counter clear) / 82:PRG (Drive programming start) / no:- (no allocation)
C011 to C018, C019	Multi-function input ,FW terminal operation selection	00: Norm.Open (NO) 01: Norm.Closed (NC)
C021 to C025	Multifunction output 11-15 selection	00:RUN(during RUN)/01:FA1(constant speed reached)/ 02:FA2(set frequency min. reached)/03:OL(overload warning)/04:OD(PID excessive deviation)/05:AL(alarm output)/ 06:FA3(disconnection defected)/07:OTQ(over torque)/ 08:IP(signal during momentary power interruption)/ 09:UV(signal during undervoltage)/10:TRQ(torque limit)/ 11:RNT(RUN time over)/12:ONT(power on time over)/ 13:THM(thermal warning)/19:BRK(brake release)/20:BER (brake error)/21:ZS(0Hz)/22:DSE(excessive speed deviation)/23:POK(position ready)/24:FA4(set frequency exceeded 2)/25:FA5(set frequency only 2)/26:OL2(overload warning 2)/27:ODc(analog O disconnection detection)/28:OIDc(analog OI disconnection detection)/29:O2Dc (analog O2 disconnection detection)/31:FBV(PID FB status output)/32:NDc(network error)/33:LOG1-38:LOG6 (logic operation output1-6)/39:WAC(capacitor life warning)/40:WAF(cooling fan life warning)/41:FR(starting contact signal)/42:OHF(fin overheat warning)/43:LOC(low current signal)/44~49:MO1-MO6 (drive programming output 1-6)/50:IRDY(operation ready)/51:FWR(during forward operation)/52:RVR(during reverse operation)/53:MJA(fatal fault signal)/54:WCO(window comparator O)/ 55:WCOI(window comparator OI)/56:WCO2(window comparator O2) / 63:OPO (option) / no:- (no allocation)
C026	Relay output (AL1,AL2) function selection	
C031 ~C035, C036	Multifunction, Relay output	00: Norm.Open (NO contact at AL1, NC contact at AL2) 01: Norm.Closed (NC contact at AL1, NO contact at AL2)
H003	Motor capacity	0.20 to 75.00 kW (0.4 to 55 kW) 0.20 to 160.00 kW (75 to 132KW)
H004	Motor pole number	2P/4P/6P/8P/10P

Safety Precautions

■ Indications and Meanings of Safety Information

In this user's manual, the following precautions and signal words are used to provide information to ensure the safe use of the 3G3RX Inverter. The information provided here is vital to safety. Strictly observe the precautions provided.

■ Meanings of Signal Words

⚠ WARNING	Indicates an imminently hazardous situation which, if not avoided, is likely to result in serious injury or may result in death. Additionally there may be severe property damage.
⚠ CAUTION	Indicates a potentially hazardous situation which, if not avoided, may result in minor or moderate injury or in property damage.

■ Alert Symbols in this Document

⚠ WARNING	
	Turn off the power supply and implement wiring correctly. Not doing so may result in a serious injury due to an electric shock.
	Wiring work must be carried out only by qualified personnel. Not doing so many result in a serious injury due to an electric shock.
	Do not change wiring and slide switches (SW1), put on or take off Operator and optional devices, replace cooling fans while the input power is being supplied. Doing so may result in a serious injury due to an electric shock.
	Be sure to ground the unit. Not doing so may result in a serious injury due to an electric shock or fire. (200 V class: type-D grounding, 400 V class: type-C grounding)

⚠ WARNING

	Do not remove the terminal cover during the power supply and 10 minutes after the power shut off. Doing so may result in a serious injury due to an electric shock
	Do not operate the Operator or switches with wet hands. Doing so may result in a serious injury due to an electric shock.
	Inspection of the Inverter must be conducted after the power supply has been turned off. Not doing so may result in a serious injury due to an electric shock. The main power supply is not necessarily shut off even if the emergency shut off function is activated.
	Do not touch the inverter fins, braking resistors and the motor, which become too hot during the power supply and for some time after the power shut off function is activated.

⚠ CAUTION

	Do not connect resistors to the terminals (+1, P/+2, N/-) directly. Doing so might result in a small-scale fire, heat generation or damage to the unit.
	Install a stop motion device to ensure safety. Not doing so might result in a minor injury. (A holding brake is not a stop motion device designed to ensure safety.)
	Be sure to use a specified type of braking resistor/regenerative braking unit. In case of a braking resistor, install a thermal relay that monitors the temperature of the resistor. Not doing so might result in a moderate burn due to the heat generated in the braking resistor/regenerative braking unit. Configure a sequence that enables the Inverter power to turn off when unusual over heating is detected in the braking resistor/regenerative braking unit.
	The Inverter has high voltage parts inside which, if short-circuited, might cause damage to itself or other property. Place covers on the openings or take other precautions to make sure that no metal objects such as cutting bits or lead wire scraps go inside when installing and wiring.
	Take safety precautions such as setting up a molded-case circuit breaker (MCCB) that matches the Inverter capacity on the power supply side. Not doing so might result in damage to property due to the short circuit of the load.
	Do not dismantle, repair or modify this product. Doing so may result in an injury.

SUITABILITY FOR USE

OMRON shall not be responsible for conformity with any standards, code, or regulations that apply to the combination of products in the customer's application or use of the products.

Take all necessary steps to determine the suitability of the product for the systems, machines, and equipment with which it will be used.
Please know and observe all prohibitions of use applicable to the products.

NEVER USE THE PRODUCTS FOR AN APPLICATION INVOLVING SERIOUS RISK TO LIFE OR PROPERTY WITHOUT ENSURING THAT THE SYSTEM AS A WHOLE HAS BEEN DESIGNED TO ADDRESS THE RISKS, AND THAT THE OMRON PRODUCTS ARE PROPERLY RATED AND INSTALLED FOR THE INTENDED USE WITHIN THE OVERALL EQUIPMENT OR SYSTEM.

See also product catalogues for Warranty and Limitations of Liability.

Sales and Service: OMRON EUROPE B.V

OMRON

OMRON Corporation
Industrial Automation Company

Control Devices Division H.Q.
Motion Control Division
Shiokoji Horikawa, Shimogyo-ku,
Kyoto, 600-8530 Japan
Tel: (81) 75-344-7173
Fax: (81) 75-344-7149

2-2-1 Nishikusatsu, Kusatsu-shi,
Shiga, 525-0035 Japan
Tel: (81) 77-565-5223
Fax: (81) 77-565-5568

Regional Headquarters
OMRON EUROPE B.V.
Wegalaan 67-69-2132 JD Hoofddorp
The Netherlands
Tel. (31)2356-81-300
Fax: (31)2356-81-388

Note: In the interest of product improvement, specifications are subject to change without notice.

Printed in Japan

Precautions for Safe Use

■ Installation and Storage

Do not store or use the product in the following places.

- Locations subject to direct sunlight.
- Locations subject to ambient temperature exceeding the specifications.
- Locations subject to relative humidity exceeding the specifications.
- Locations subject to condensation due to severe temperature fluctuations.
- Locations subject to corrosive or flammable gases.
- Locations subject to exposure to combustibles.
- Locations subject to dust (especially iron dust) or salts.
- Locations subject to exposure to water, oil, or chemicals.
- Locations subject to shock or vibration.

■ Transporting, Installation, and Wiring

- Do not drop or apply strong impact on the product. Doing so may result in damaged parts or malfunction.
- Do not hold by the front cover and terminal cover, but hold by the fins during transportation.
- Confirm that the rated input voltage of the inverter is the same as AC power supply voltage.
- Do not connect an AC power supply voltage to the control input/output terminals. Doing so may result in damage to the product.
- Be sure to tighten the screws on the terminal block securely. Wiring work must be done after installing the unit body.
- Do not connect any load other than a three-phase inductive motor to the U, V, and W output terminals.
- Take sufficient shielding measures when using the product in the following locations. Not doing so may result in damage to the product.
  - Locations subject to static electricity or other forms of noise.
  - Locations subject to strong magnetic fields.
  - Locations close to power lines.
- If a parameter is set incorrectly when starting up, adjusting, maintaining or replacing, an unexpected operation may occur. Perform the operation after enough confirmation.
- When using Drive Programming, confirm that the program data is downloaded normally before starting the operation.

■ Operation and Adjustment

- Be sure to confirm the permissible range of motors and machines before operation because the inverter speed can be changed easily from low to high.
- Provide a separate holding brake if necessary.
- If Drive Programming stops during multi-function output, the output status is held. Take safety precautions such as stopping peripheral devices.
- If the clock command is used in Drive Programming, an unexpected operation may occur due to weak battery or removal of the LCD digital operator. Take measures such as detecting a weak battery or removal of the LCD digital operator (the clock data detects the initial setting and all zero), stopping the inverter or programs.

■ Maintenance and Inspection

- Be sure to confirm safety before conducting maintenance, inspection or parts replacement.
- The capacitor service life is influenced by the ambient temperature. Refer to "Product life curve" described in the manual. When a capacitor reaches the end of its service life and does not work as the product, you need to replace the capacitor.
- When disposing of LCD digital operators and wasted batteries, follow the applicable ordinances of your local government. When disposing of the battery, insulate it using tape.

The following display must be indicated when products using lithium primary batteries (with more than 6 ppb of perchlorate) are transport to or through the State of California, USA.

Perchlorate material - special handling may apply

See www.dtsc.ca.gov/hazardouswaste/perchlorate

The 3G3AX-OP05 has the lithium primary battery (with more than 6 ppb of perchlorate). Label or mark the above display on the exterior of all outer shipping packages of your products when exporting your products which the 3G3AX-OP05 are installed to the State of California, USA.

- Do not short + and -, charge, disassemble, heat, put into the fire, or apply strong impact on the battery. The battery may leak, explode, produce heat or fire. Never use the battery which was applied strong impact due to such as fall on the floor, it may leak.
- UL standards establish that the battery shall be replaced by an except engineer. The expert engineer must be in charge of the replacement and also replace the battery according to the method described in this manual.
- When the display of LCD digital operator can not be recognized due to the service life, replace the LCD digital operator.

Precautions for Correct Use

■ Installation

- Mount the product vertically on a wall the product's longer sides upright.
  The material of the wall has to be noninflammable such as a metal plate.

■ Restart Selection Function

- Do not come close to the machine when using the Restart selection function (b001, b008) because the machine may abruptly start when stopped by an alarm.
- Be sure to confirm the RUN signal is turned off before resetting the alarm because the machine may abruptly start.

■ Deceleration Stop Function

- Do not come close to the machine when selecting reset in the Deceleration stop function (b050) because the machine may abruptly start after the power is turned on.

■ Operation Stop Command

- Provide a separate emergency stop switch because the STOP key on the Operator is valid only when function settings are performed.
- When checking a signal during the power supply and the voltage is erroneously applied to the control input terminals, the motor may start abruptly. Be sure to confirm safety before checking a signal.

■ Maintenance and Parts Replacement

- Inverters contain components and will operate properly only when each component operates normally. Some of the electrical components require maintenance depending on application conditions. Periodic inspection and replacement are necessary to ensure proper long-term operation of inverters. (Quoted from The Recommendation for Periodic Maintenance of a General-purpose Inverter published by JEMA.)
- When a cooling fan reaches the end of its service life, replace it.

■ Product Disposal

- Comply with the local ordinance and regulations when disposing of the product.

UL Cautions

The warnings and instructions in this section summarizes the procedures necessary to ensure an inverter installation complies with Underwriters Laboratories guidelines.

They are used to provide both an adjustable voltage and adjustable frequency to the AC motor. The inverter automatically maintains the required voltage-Hz ration allowing the capability through the motor speed range.

- Use 60/75°C Cu wire only. For 3G3RX series except for models 3G3RX-A4055, -A4075 and -A4110.
- Use 75°C Cu wire only. For models: 3G3RX-A4055, -A4075 and -A4110.
- Suitable for use on a circuit capable of delivering not more than 100k rms symmetrical amperes, 240 V maximum. (For models:200 V class)
- Suitable for use on a circuit capable of delivering not more than 100k rms symmetrical amperes, 480 V maximum. (For models:400 V class)
- Install device in pollution degree 2 environment or equivalent.
- Maximum Surrounding Air Temperature 50°C.
- Caution -Risk of Electric Shock- Capacitor discharge time is at least 10 minutes.
- Solid state motor overload protection reacts with max. 120% of FLA.
- Integral solid state short circuit protection does not provide branch circuit protection. Branch circuit protection must be provided in accordance with the National Electric Code and any additional local codes.

■ Circuit breaker and Fuse Size

Distribution fuse/circuit breaker size marking is included in the manual to indicate that the unit shall be connected with a Listed inverse time circuit breaker, rated 600 V with the current ratings or UL Listed fuses as shown in the table below.

Input Voltage	Inverter Model	Circuit Breaker/Fuse	Ratings (A)
200 V Class	3G3RX-A2004 to A2037	Fuse (Type J)	30
	3G3RX-A2055 to A2110	Fuse (Type J) or Inverse time circuit Breaker	100
	3G3RX-A2150 to A2220		125
	3G3RX-A2300, A2370		225
	3G3RX-A2450		250
	3G3RX-A2550		300
400 V Class	3G3RX-A4004 to A4040	Fuse (Type J)	20
	3G3RX-A4055 to A4110	Inverse time circuit Breaker	40
	3G3RX-A4150 to A4220		75
	3G3RX-A4300, A4370		100
	3G3RX-A4450, A4550		150
	3G3RX-B4750, B4900		225
	3G3RX-B411K		300
	3G3RX-B413K		350

■ Wire Connectors

Field wiring connections must be made by a UL Listed and CSA certified closed-loop terminal connector sized for the wire gauge involved.

Connector must be fixed using the crimp tool specified by the connector manufacturer.

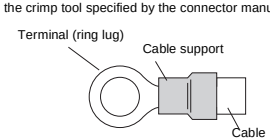

■ Terminal Tightening Torque and Wire Size

The wire size range and tightening torque for field wiring terminals are presented in the tables below.

Input Voltage	Motor Output (kW)	Inverter Model	Power Terminal Wiring Size Range (AWG)	Torque (N·m)
200 V Class	0.4	3G3RX-A2004	14 (Stranded only)	1.8
	0.75	3G3RX-A2007		
	1.5	3G3RX-A2015		
	2.2	3G3RX-A2022		
	3.7	3G3RX-A2037	10 (Stranded only)	
	5.5	3G3RX-A2055	8	4.0
	7.5	3G3RX-A2075	6	
	11	3G3RX-A2110	6 or 4	
	15	3G3RX-A2150	2	4.9
	18.5	3G3RX-A2185	1	
	22	3G3RX-A2220	1 or 1/0	8.8
	30	3G3RX-A2300	2/0 or Parallel of 1/0	
	37	3G3RX-A2370	4/0 (Prepared wire only) or Parallel of 1/0	20.0
	45	3G3RX-A2450		
	55	3G3RX-A2550	350 kcmil (Prepared wire only) or Parallel of 2/0 (Prepared wire only)	19.6
400 V Class	0.4	3G3RX-A4004	14 (Stranded only)	1.8
	0.75	3G3RX-A4007		
	1.5	3G3RX-A4015		
	2.2	3G3RX-A4022		
	4.0	3G3RX-A4040		
	5.5	3G3RX-A4055	12	4.0
	7.5	3G3RX-A4075	10	
	11	3G3RX-A4110	8	
	15	3G3RX-A4150	6	4.9
	18.5	3G3RX-A4185		
	22	3G3RX-A4220	6 or 4	
	30	3G3RX-A4300	3	
	37	3G3RX-A4370	1	20.0
	45	3G3RX-A4450	1	
	55	3G3RX-A4550	2/0	
	75	3G3RX-B4750	Parallel of 1/0	
	90	3G3RX-B4900		
	110	3G3RX-B411K	Parallel of 3/0	35.0
	132	3G3RX-B413K		

Terminal Connector	Wiring Size Range (AWG)	Torque (N·m)
Logic and Analog connectors	30-16	0.22-0.25
Relay connector	30-14	0.5-0.6

■ Motor Overload Protection

3G3RX Inverters provide solid state motor overload protection, which depends on the proper setting of the following parameters:

- b012: electronic overload protection
- b212: electronic overload protection, 2nd motor
- b312: electronic overload protection, 3rd motor

Set the rated current [Amperes] of the motor(s) with the above parameters. The setting range is 0.2 rated current to 1.0 rated current.

When two or more motors are connected to the Inverter, they cannot be protected by the electronic overload protection. Install an external thermal relay on each motor.

Conformance to EC Directives

- For earthing, selection of cable, and any other conditions for EMC-compliance, please refer to the manual for installation.
- This is a class A product in residential areas it may cause radio interference, in which case the user may be required to take adequate measures to reduce interference.

■ 3G3RX series Inverter has integrated EMC filter as shown below

- 200 V class: EN61800-3 category C3
- 400 V class: EN61800-3 category C3

■ OMRON Corporation

Shiokoji Horikawa, Shimogyo-ku, Kyoto, 600-8530, Japan

■ Omron Europe B.V.

Wegalaan 67-69, NL-2132 JD Hoofddorp, The Netherlands