PRODUCT NEWS

Product Discontinuation Notices

OMRON

Issue Date
Month Day, Year
July 31st , 2023

Product Discontinuation

Safety Door Switch

D40Z series

Recommended Replacement

Safety Door Switch

D41D series
D40A series

[Final order entry date]

The end of September, 2024

[Date of The Last Shipping]

The end of November, 2024

[Caution on recommended replacement]

When using the recommended alternative product D41D series, there is no set model between the switch and the actuator. Please select the switch and actuator respectively before purchasing. In addition, for connection with external devices, please also purchase an accessory (sold separately) connection cable.
The D41D Series is available in Japan, the United States, Canada, EU member states, the United Kingdom, the People's Republic of China, Australia, and New Zealand. If it is used in other regions, it may violate the radio laws of that country. The D40A series can be used even in areas where the D41D series cannot be used.

[Difference from discontinued product]

Recommended replacement Model	Body Color	Dimen-sions	Wire connection	Mounting Dimensions	Charac-teristics (*3)	Operation ratings	Operation methods
D41D Series							
D41D (Switch)	*	-- (*1)	--	-- (*1)	*	-- (*2)	--
D41D-A (Actuator)	* (*3)	-- (*1)	-	-- (*1)	*	*	-
D40A Series							
D40A	*	*	*	**	* (*4)	*	*

** : Compatible
* : The change is a little/Almost compatible
-- : Not compatible
- : No corresponding specification

*1 D41D has different mounting dimensions from D40Z, but the size of the product is smaller than D40Z. (Refer to “Dimensions / Mounting dimensions”)
*2 D41D has similar detection characteristics to the D40Z. Only the LED display during operation is different.
*3 D41D-A2 only large body color change.
*4 D40A is PLd and Category 3. Consider the D41D series when PLe Category 4 safety is required or when switching to high level coded products.

[Product Discontinuation and recommended replacement]

Product discontinuation	Recommended replacement
D40Z-1C2	**D41D series (Switches)**
	D41D-1CD-N1
	D41D-2CD-025N2
	D41D series (Actuator)
	D41D-A1
	D41D-A2
	D41D-A3
	D40A series
	D40A-1C2
	D40A-1C015-F
D40Z-1C5	**D41D series (Switches)**
	D41D-1CD-N1
	D41D-2CD-025N2
	D41D series (Actuator)
	D41D-A1
	D41D-A2
	D41D-A3
	D40A series
	D40A-1C5
	D40A-1C015-F
D40Z-1C2-S	D41D-1CD-N1
	D41D-2CD-025N2
D40Z-1C5-S	D41D-1CD-N1
	D41D-2CD-025N2
D40Z-1C-A	D41D-A1
	D41D-A2
	D41D-A3

Recommended Replacement; D41D series

[Body color]

Product discontinuation Model D40Z series	Recommendable replacement Model D41D series
Switch Blacc, Yellow. 	**Switch** Black, Blue. 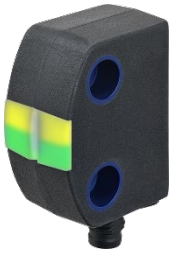
Actuator Black, Yellow. 	**Actuator; D41D-A1** Black, Blue.  **Actuator; D41D-A2** Blue.  **Actuator; D41D-A3** Black. 

[Dimensions / Mounting dimensions]

Product discontinuation Model D40Z series	Recommendable replacement Model D41D series
Switch 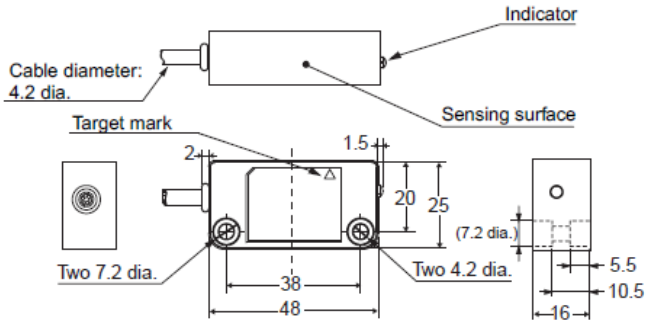 	**Switch; D41D-1CD-N1** 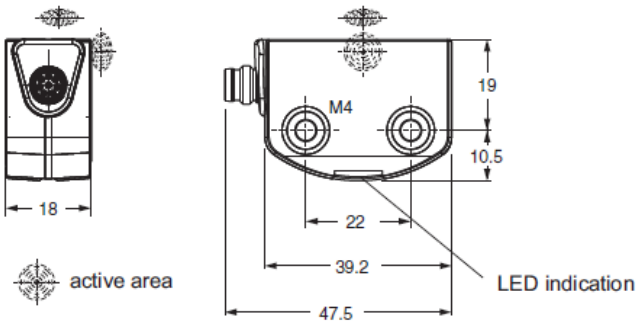 **Switch; D41D-2CD-025N2** 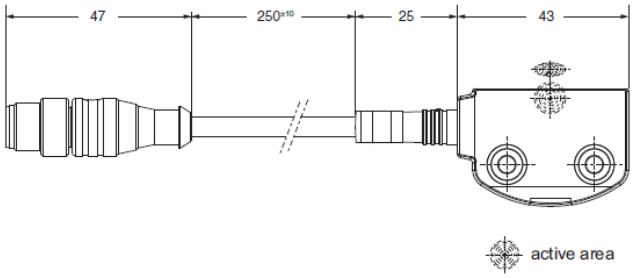
Actuator 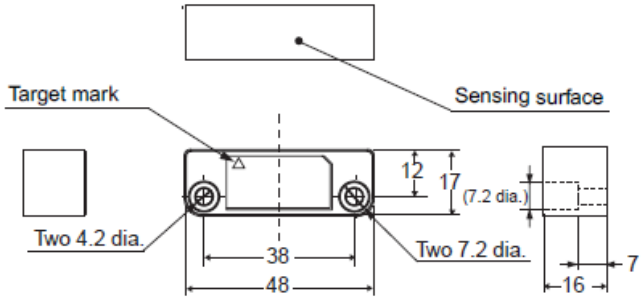 	**Actuator; D41D-A1** 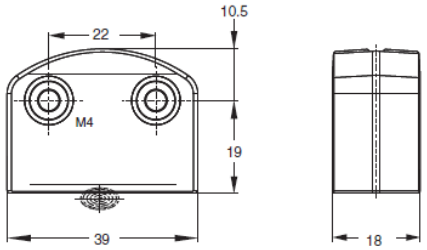 M4 screw (Tightening torque: 0.8N・m) **Actuator; D41D-A2** 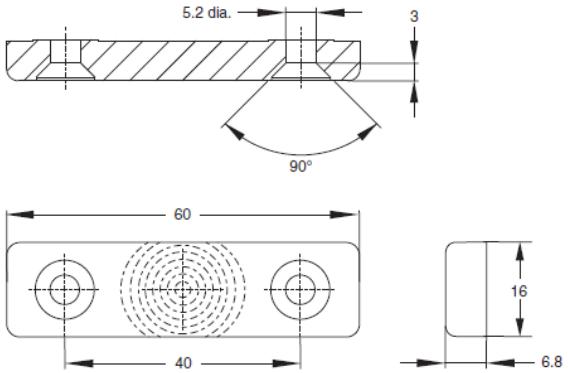 M5 countersunk screw (Tightening torque: 2N・m)

Product discontinuation Model D40Z series	Recommendable replacement Model D41D series
	Actuator; D41D-A3 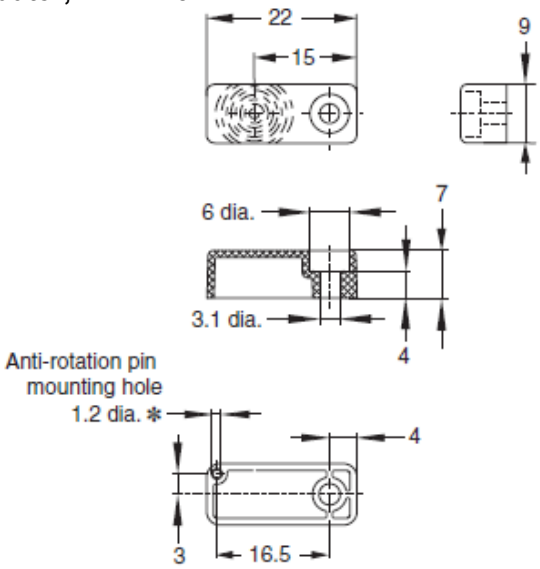 M3 screw (Tightening torque: 0.6N･m)

[Wire connection]

Product discontinuation Model D40Z series	Recommendable replacement Model D41D series
Wiring of Input and Output Signal Name / Color of Conductor / Description of Operation Non-contact door switch power input + Brown / - Blue: Power supply for D40Z Non-contact door switch signal input: White — To set non-contact door switch output in ON state, non-contact door switch signal input must be in ON state. Non-contact door switch Output: Black — Output status depends on statuses of actuator and non-contact door switch signal input. Auxiliary monitoring Output: Yellow — Output status depends on status of actuator. Gray — When a fault is detected, turns into OFF state regardless of actuator status.	**Wiring of Input and Output** Function / Pin assignment / Color code of the OMRON's connector (M8/M12 connector cable) M8: D41D-8P5-CFM8-7□□M M12: D41L-8P5-CFM12-9□□M A1 / U_e / 1 / WHITE X1 / Safety input 1 / 2 / BROWN A2 / GND / 3 / GREEN Y1 / Safety output 1 / 4 / YELLOW OUT / Auxiliary output / 5 / GRAY X2 / Safety input 2 / 6 / PINK Y2 / Safety output 2 / 7 / BLUE IN / without function / 8 / RED
Connection Example Multiple switch connection with G9SX-NS□ 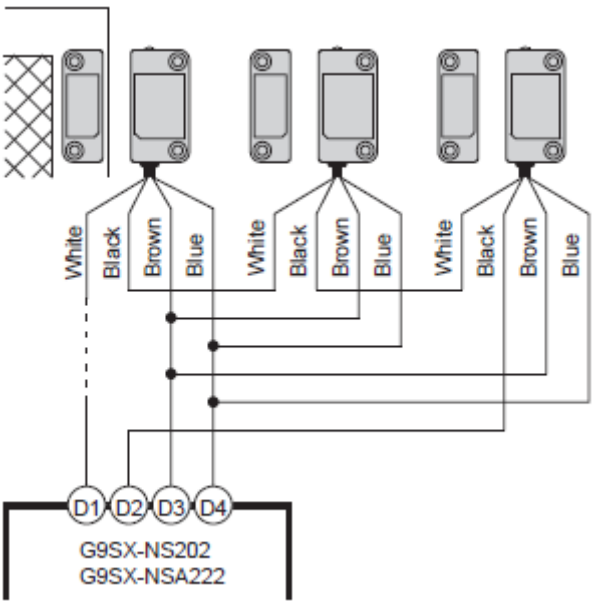 	**Connection Example** 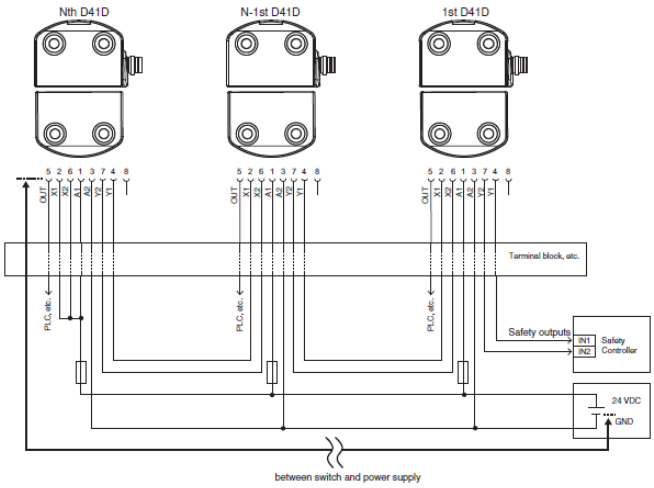

Product discontinuation Model D40Z series	Recommendable replacement Model D41D series
Connectable controllers - Non-Contact Door Switch Controller: G9SX-NS□ - Safety Controller: G9SP - NX-series Safety Controller: NX-SL / NX-SI	**Connectable controllers** - Safety Relay Unit: G9SA / G9SB - Flexible Safety Unit: G9SX (Excldes G9SX-NS□) - Safety Controller: G9SP - NX-series Safety Controller: NX-SL / NX-SI - Safety I/O Terminal: GI-SMD / GI-SID

[Characteristics]

Item		Product discontinuation Model D40Z series	Recommendable replacement Model D41D series
Detection method		Electromagnetic induction	RFID
Interlock type		Type 4 (EN ISO 14119)	Type 4 (EN ISO 14119)
Coded level		Low level coded (EN ISO 14119)	High level coded (EN ISO 14119)
Operating characteristic	**Operating distance (OFF --> ON)**	5 mm min.	10 mm (-10 to 60℃) 6 mm (-10 to 60℃, lateral) 8 mm (-25 to 65℃) 4 mm (-25 to 65℃, lateral)
	Operating distance (ON --> OFF)	15 mm max.	18 mm (lateral actuation: 15 mm)
	Differential travel	20% or less of operating distance at 23 ℃ C (maximum 2.5 mm)	Less than 2.0 mm
	Repeat accuracy	±10% of operating distance at 23℃	Less than 0.5 mm
Influence of temperature		20% or less of operating distance at 23 ℃ within temperature range of -10 to 65 ℃	-
Ambient operating temperature		-10 to 65 ℃ (with no icing or condensation)	-25 to 65℃
Ambient operating humidity		25% to 85%	93% max. (non-condensing, non-icing)
Degree of contamination		3	3
Vibration resistance		10 to 55 to 10 Hz (single amplitude: 0.75 mm, double amplitude: 1.5 mm)	10 to 55 Hz, amplitude 1.0 mm
Shock resistance		300 m/s^2 min.	30 g/11 ms
Degree of protection		IP67	IP65 and IP67 (IEC 60529)
Material		PBT resin	Thermoplastic PBT (enclosure)
Mounting method		M4 screws	M4 screws: Switches Actuator (D41D-A1) M5 countersunk screw: Actuator (D41D-A2) M3 screws: Actuator (D41D-A3)
Terminal screw tightening torque		1 N·m	M4 screws: 0.8 N·m M5 countersunk screw: 2 N•m M3 screws: 0.6 N•m
Power supply voltage		24 VDC +10%/-15%	24 VDC +10%/-15%
Auxiliary monitoring output		Photocoupler output: 24 VDC, load current: 10 mA max	PNP transistors output: 24 VDC, load current: 50 mA max
Connecting cables		Discrete wire (6-wire) cable: 2m, 5m	D41D-1CD-N1: M8 connector, 8-pole, A-coded

Item		Product discontinuation Model D40Z series	Recommendable replacement Model D41D series
			D41D-2CD-025-N2: Connecting cable 0.25 m long with M12 connector
Connecting cables (sold separately)		-	M8 connector cable - D41D-8P5-CFM8-7□□M (2 m / 5 m / 10 m) M12 connector cable - D41L-8P5-CFM12-9□□M (5 m / 10 m)
Number of connectable switches		30 max. (wiring length: 100 m max.)	31 max. (wiring length: 100 m max between switch and power supply.)
Weight		Switch: approx. 175 g (D40Z-1C5) Actuator: approx. 20 g	Unit: Less than 50 g Package: Less than 110 g
Standards Certification	**Directive**	Machinery Directive EMC Directive RoHS Directive WEEE Directive	Machinery Directive RE Directive RoHS Directive WEEE Directive
	Standards	- EN ISO 13849-1 PLe Category 4 - IEC/EN 61508 SIL 3 - IEC/EN 60947-5-3 - EN ISO 14119	- EN ISO 13849-1 PLe Category 4 - IEC/EN 61508 SIL 3 - IEC/EN 60947-5-3 - EN ISO 14119 - EN300 330
	UL Certification	- UL 508 - CAN/CSA C22.2 No.14	- UL 508 - CAN/CSA C22.2 No.14

[Operation ratings]

Product discontinuation Model D40Z series

LED indicators

Switch status of operation or failure is indicated by two red and yellow LEDs.

LED color	Status
RED	ON: Switch does NOT detect actuator. Blinking: Switch detects a fault.
YELLOW	ON: Switch detects actuator. Blinking: Switch detects actuator, and non-contact door switch signal input is in OFF state.

Engineering data (reference value)

- Detection ranges

The switch and actuator target marks are on the same axis.

The operating distance depending on the deviation in the X or Z direction from the sensing surface matching.

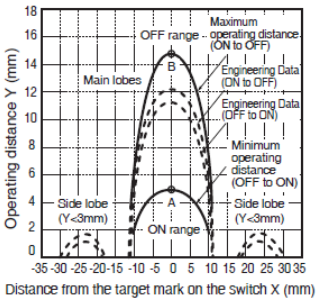

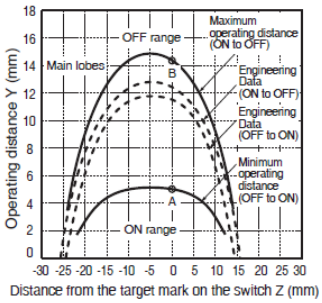

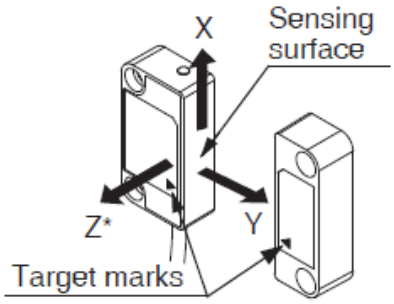

* The movement of the arrow direction indicates the positive direction on the graph.

Recommendable replacement Model D41D series

LED indicators

Switch status of operation or failure is indicated by three red, yellow, and green LEDs.

Switch function	LEDs		
	Green	Red	Yellow
Supply voltage	On	Off	Off
Actuated	On	Off	On
Actuated in limit area	On	Off	Flashes (1Hz)
Error warning, switch actuated	Off	Flashes	On
Error	Off	Flashes	On
Teach actuator	Off	On	Flashes
Tampering protection time (*1)	Flashes	Off	Off
Error in input circuit X1 and/or X2	Flashes (1Hz)	Off	Off
Error in input circuit X1 and/or X2	Flashes (1Hz)	Off	On

*1. Refer to Teaching.

Engineering data (reference value)

- Operating distance

Operating distance of the switch depending on the direction in which the actuator approaches.

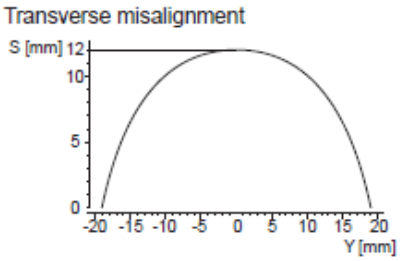

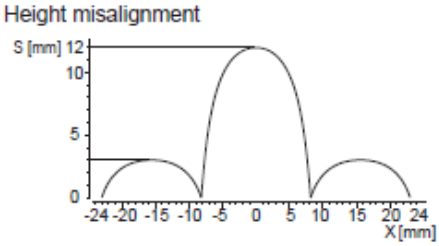

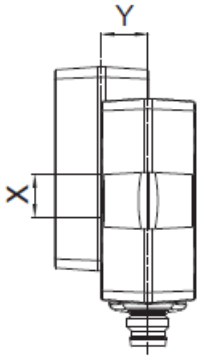

[Operation methods]

Product discontinuation Model D40Z series	Recommendable replacement Model D41D series
Teaching It does not have a teaching procedure.	**Teaching** Individually coded safety door switch and actuators will require the following teach-in procedure.  1. Turn the power ON.  2. Move the actuator closer to the switch to start the teaching procedure. The red LED turns ON. After 10 seconds, the yellow LED gives brief cyclic flashes. Turn the power OFF. ✻  3. Turn the power ON again to complete the teaching procedure. ✻ If you repeat the teaching procedure, you need to wait for 10 minutes after brief cyclic flashes of the yellow LED. - For ordering suffix D41D-1 (switch) The executed allocation of safety door switch and actuator is irreversible. - For ordering suffix D41D-2 (switch) The teach-in procedure for a new actuator can be repeated an unlimited number of times. When a new actuator is taught, the code, which was applicable until that moment, becomes invalid. - For ordering suffix D41D-A1/-A2/-A3 (actuator) Actuator can be taught an unlimited number of times. This allows the actuator taught by the D41D-1 to be taught again by the D41D2 with no teaching limitation instead of the D41D-1 with teaching limitation.

Recommended Replacement; D40A series

(Comparison with the current lineup. Contact us separately for additional lineup specifications.)

[Body color]

Product discontinuation Model D40Z series	Recommendable replacement Model D40A series
Switch Blacc, Yellow. 	**Switch** Black, White. 
Actuator Black, Yellow. 	**Actuator** Black, White. 

[Dimensions]

Product discontinuation Model D40Z series	Recommendable replacement Model D40A series
Switch 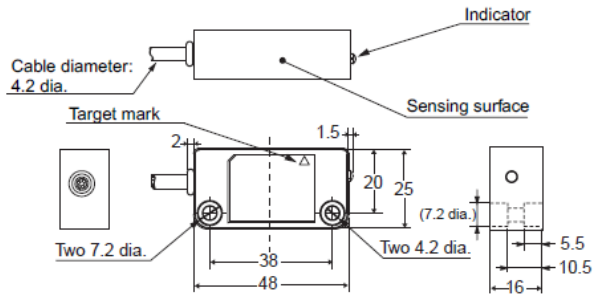	**Switch** 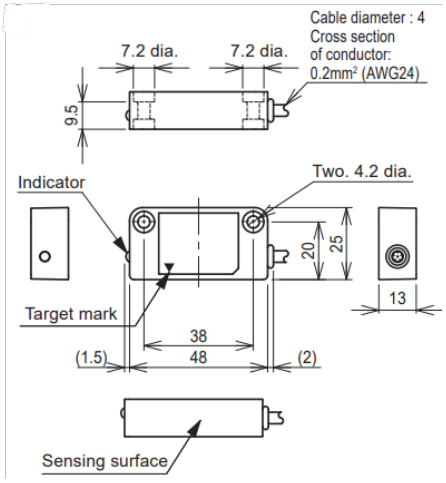
Actuator 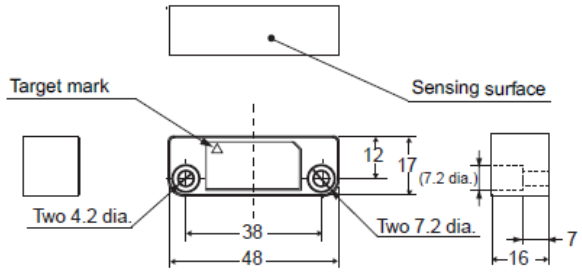	**Actuator** 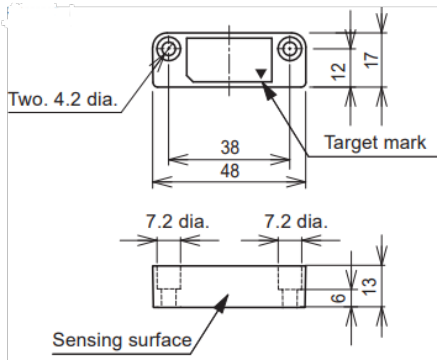

[Wire connection]

Product discontinuation Model D40Z series

Wiring of Input and Output

Signal Name		Color of Conductor	Description of Operation
Non-contact door switch power input	+	Brown	Power supply for D40Z
	-	Blue	
Non-contact door switch signal input		White	To set non-contact door switch output in ON state, non-contact door switch signal input must be in ON state.
Non-contact door switch Output		Black	Output status depends on statuses of actuator and non-contact door switch signal input.
Auxiliary monitoring Output		Yellow	Output status depends on status of actuator.
		Gray	When a fault is detected, turns into OFF state regardless of actuator status.

Connection Example

Single switch connection with G9SX-NS□

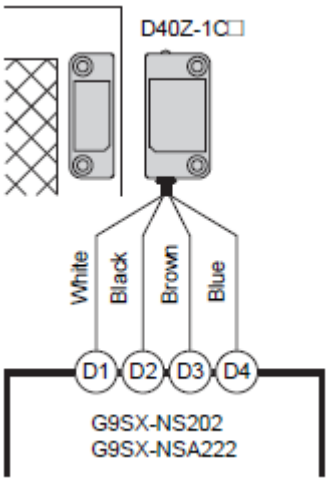

Multiple switch connection with G9SX-NS□

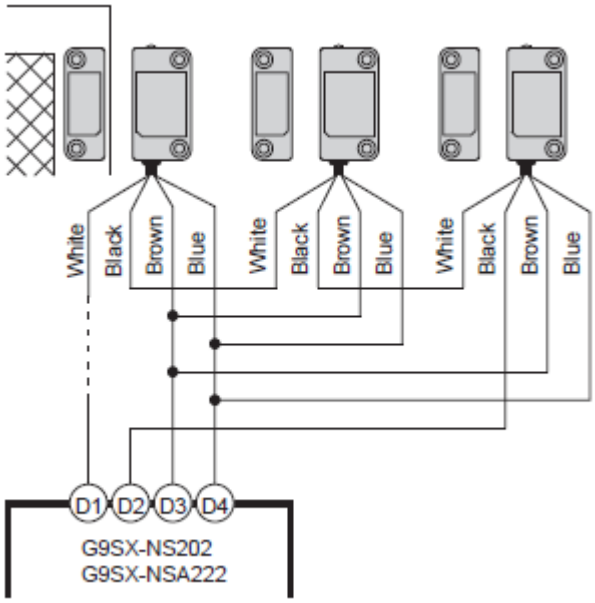

Recommendable replacement Model D40A series

Wiring of Input and Output

Signal Name		Cable color	Pim number	Description of operation
Non-contact door switch power input	+	brown	1	Power supply for D40A. Connect to D3 terninal and D4 terminal on G9SX-NS□.
	-	blue	3	
Non-contact door switch signal input		white	2	Input designated signal from G9SX-NS□. To set non-contact door switch output in ON state, non-contact door switch input must be in ON state.
Non-contact door switch output		black	4	Output status depends on actuator status and non-contact door switch input state.
Auxiliary monitoring output (PNP open corrector output)		yellow	5	Output when sensor detect actuator.

Connection Example

Single switch connection with G9SX-NS□

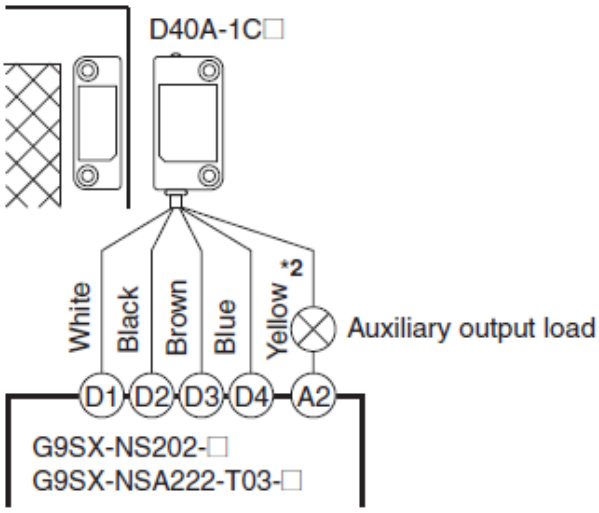

Multiple switch connection with G9SX-NS□

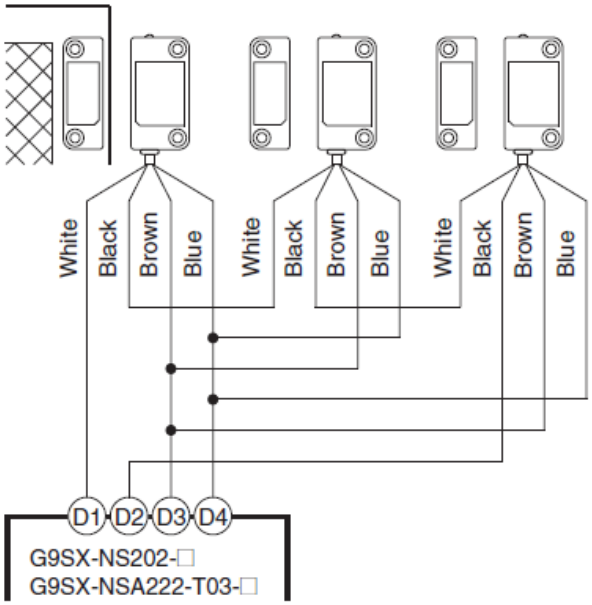

Product discontinuation Model D40Z series	Recommendable replacement Model D40A series
Wiring example of auxiliary output The auxiliary output of D40Z supports the input polarity of both PNP and NPN. 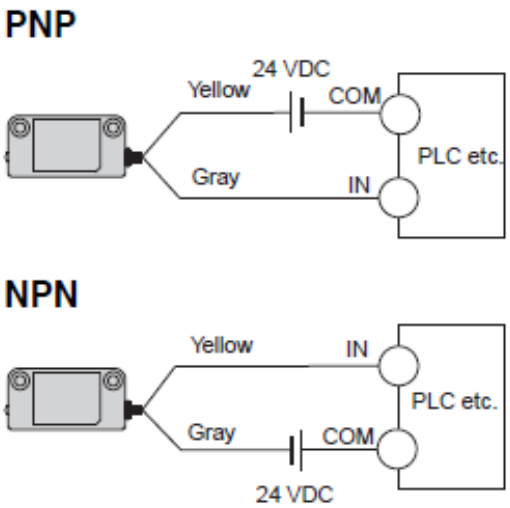 **Connectable controllers** - Non-Contact Door Switch Controller: G9SX-NS□ - Safety Controller: G9SP - NX-series Safety Controller: NX-SL / NX-SI	**Wiring example of auxiliary output** The auxiliary output of D40A is PNP only. 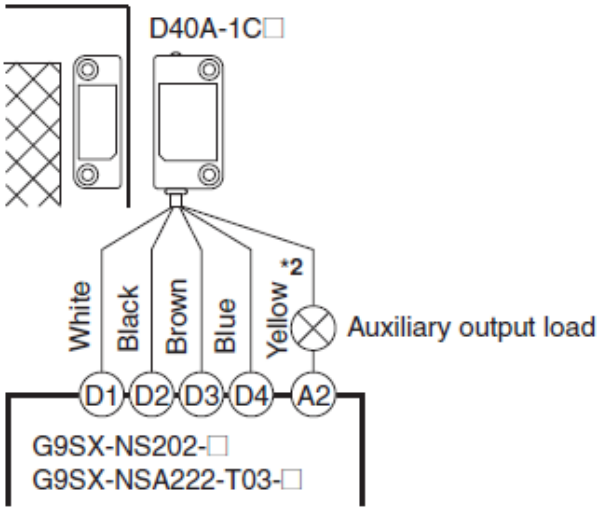 **Connectable controllers** - Non-Contact Door Switch Controller: G9SX-NS□ - Safety Controller: G9SP - NX-series Safety Controller: NX-SL / NX-SI

[Characteristics]

Item		Product discontinuation Model D40Z series	Recommendable replacement Model D40A series
Detection method		Electromagnetic induction method	Magnetic detection
Interlock type		Table Type 4 (EN ISO 14119)	Type 4 (EN ISO 14119)
Coded level		Low level coded (EN ISO 14119)	Low level coded (EN ISO 14119)
Operating characteristics	**Operating distance (OFF --> ON)**	5 mm min.	5 mm min.
	Operating distance (ON --> OFF)	15 mm max.	15 mm max.
	Differential travel	20% or less of operating distance at 23 ℃ (maximum 2.5 mm)	20% or less of operating distance at 23 ℃ (maximum 2.5 mm)
	Repeat accuracy	±10% of operating distance at 23℃	±10% of operating distance at 23℃
Influence of temperature		20% or less of operating distance at 23 ℃ within temperature range of -10 to 65 ℃	20% or less of operating distance at 23 ℃ within temperature range of -10 to 55 ℃
Ambient operating temperature		-10 to 65 ℃ (with no icing or condensation)	-10 to 55 ℃ (with no icing or condensation)
Ambient operating humidity		25% to 85%	25% to 85%
Degree of contamination		3	3
Vibration resistance		10 to 55 to 10 Hz (single amplitude: 0.75 mm, double amplitude: 1.5 mm)	10 to 55 to 10 Hz (single amplitude: 0.75 mm, double amplitude: 1.5 mm)

Item		Product discontinuation Model D40Z series	Recommendable replacement Model D40A series
Shock resistance		300 m/s^2 min.	300 m/s^2 min.
Degree of protection		IP67	IP67
Material		PBT resin	PBT resin
Mounting method		M4 screws	M4 screws
Terminal screw tightening torque		1 N·m	1 N·m
Power supply voltage		24 VDC +10%/-15%	24 VDC +10%/-15%
Auxiliary monitoring output		Photocoupler output: 24 VDC, load current: 10 mA max	PNP transistors output: 24 VDC, load current: 10 mA max
Connecting cables		Discrete wire (6-wire) cable: 2m, 5m	D40A-1C2/-1C5(standard type): Discrete wire(5-wire) cable: 2m, 5m D40A-1C015-F (connector type): Connecting cable 0.15 m long with M12 connector (5-pole)
Connecting cables (sold separately)		-	Socket on One Cable End (5-pole connectors): - XS2F-D521-□G0-A (2 m / 5 m / 10 m / 15 m / 20 m) Socket and Plugs on Cable Ends (5-pole connectors): - XS2W-D521-□G1-A (2 m / 5 m / 10 m / 15 m / 20 m)
Number of connectable switches		30 max. (wiring length: 100 m max.)	30 max. (wiring length: 100 m max.)
Weight		Switch: approx. 175 g (D40Z-1C5) Actuator: approx. 20 g	Switch: approx. 145 g (D40A-1C5) Actuator: approx. 20 g
Standards Certification	**Directive**	Machinery Directive EMC Directive RoHS Directive WEEE Directive	Machinery Directive EMC Directive RoHS Directive WEEE Directive
	Standards	- EN ISO 13849-1 PLe Category 4 - IEC/EN 61508 SIL 3 - IEC/EN 60947-5-3 - EN ISO 14119	- EN ISO 13849-1 PLd Category 3 - EN 61508 SIL 3 - EN 60947-5-3 - EN ISO14119
	UL Certification	- UL 508 - CAN/CSA C22.2 No.14	- UL 508 - CAN/CSA C22.2 No.14

[Operation ratings]

Product discontinuation Model D40Z series	Recommendable replacement Model D40A series
LED indicators Switch status of operation or failure is indicated by two red and yellow LEDs.	**LED indicators** Switch status of operation is indicated by two red and yellow LEDs.

LED color	Status
RED	ON: Switch does NOT detect actuator. Blinking: Switch detects a fault.
YELLOW	ON: Switch detects actuator. Blinking: Switch detects actuator, and non-contact door switch signal input is in OFF state.

LED color	Status
RED	Sensor does NOT detect actuator
YELLOW	Sensor detect actuator

Product discontinuation Model D40Z series	Recommendable replacement Model D40A series
Engineering data (reference value) Detection ranges The switch and actuator target marks are on the same axis. The operating distance depending on the deviation in the X or Z direction from the sensing surface matching. 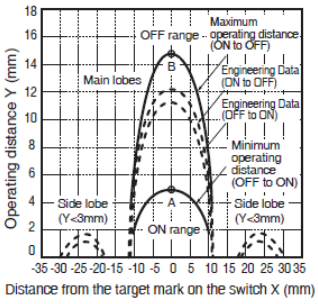 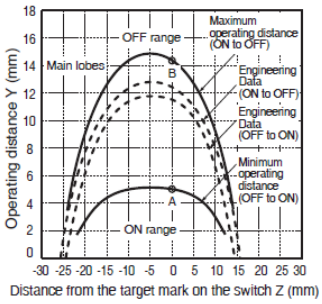 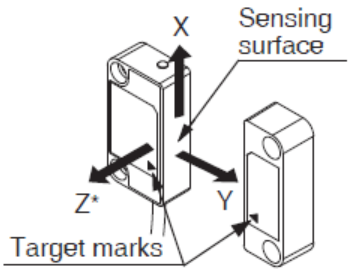 * The movement of the arrow direction indicates the positive direction on the graph.	**Engineering data (reference value)** Detection ranges The switch and actuator target marks are on the same axis. The operating distance depending on the deviation in the X or Z direction from the sensing surface matching. 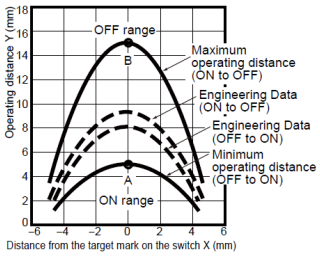 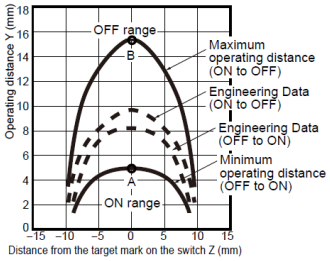 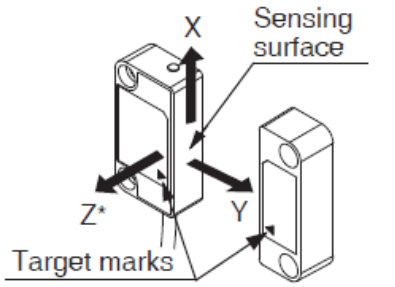 * The movement of the arrow direction indicates the positive direction on the graph.

[Operation methods]

Product discontinuation Model D40Z series	Recommendable replacement Model D40A series
Teaching It does not have a teaching procedure.	**Teaching** It does not have a teaching procedure.