OMRON

TRAJEXIA-PLC

Total freedom in motion control

» Trajexia in compact format

» You decide

» Freedom to design

trajexia

realizing

OMRON

Trajexia motion controller integrated with your PLC

Trajexia, the family of advanced motion controllers that put you in control, now has a compact and integrated version. Meet Trajexia-PLC, the motion controller that has all the flexibility and modularity of Omron PLCs, plus the outstanding motion-control features of the Trajexia platform.

If you want to add advanced motion control into your control system, Trajexia-PLC will help you to meet the most demanding requirements whilst minimizing space, saving on wiring, optimizing design and allowing easy integration with your HMI.

In fact, it's just what you asked for... and with all the familiarity and performance you require!

trajexia

Advanced control in one compact solution

Trajexia-PLC was specifically created with your application in mind. By focussing on compactness and simplicity, it will help you to create the next generation of market-leading machines quicker than ever.

Integration of your application could not be made easier. Besides a built-in MECHATROLINK-II port providing precise control of up to 30 axes, it takes advantage of the wide range of CJ1 interface board options to communicate to other Fieldbus systems such as Ethernet, Profibus or DeviceNet, and naturally you have the widest choice of best-in-class servos and inverters.

The Trajexia motion controller and the PLC exchange information through shared memory areas, helping you to simplify programming and data access, making your machine design quicker and easier.

Deliver higher performance in less space...

Saving vital rack space in your machines and time spent on wiring is only part of the overall package. Because in addition to major space-saving and economic benefits, the new Trajexia for PLC is a solution that offers all the familiar and outstanding features of Trajexia Standalone, and with the same look and feel. You don't have to invest time in re-learning to get started.

...made possible with

Data exchange is performed via the PLC bus, simplifying design, saving space and enabling easy integration with other devices.

Control of 30 axes

Coordinated over fast MECHATROLINK-II motion bus with selectable cycle time from 0.5 ms to 4 ms.

Encoder interface

Allows connection of an external encoder to the system. Supports incremental, absolute encoder and pulse train output as well.

Digital I/Os

The motion controller has embedded and configurable I/Os.

MECHATROLINK-II master port

Controls up to 30 servos or inverters.

Drives

Full connectivity to the same range of servo drives and inverters as other Trajexia controllers.

Advanced programming tools

The CJ1-MCH72 motion CPU uses the same advanced programming language as the Trajexia standalone CPUs and the new monitoring and debugging tool, Trajexia Studio.

Intuitive and easy to use programming tools

New Trajexia Studio tool offers an easy and intuitive software environment, helping to program and debug your applications using advanced tools.

- Improved user graphical interface
- Multi device support
- Drag & drop functionality
- Offline programming and advanced download
- Program compare tool
- Axis configuration wizard
- Advance editor features

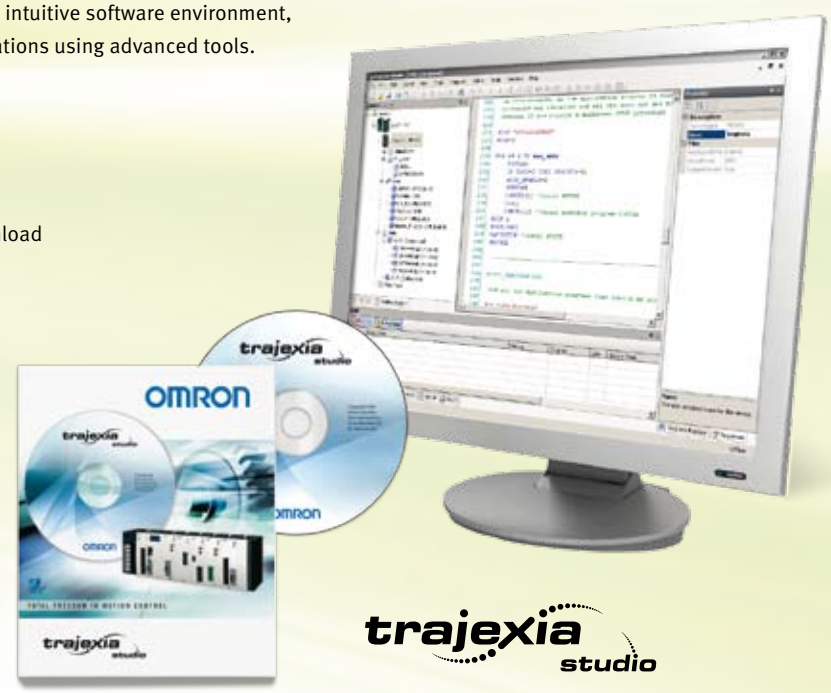

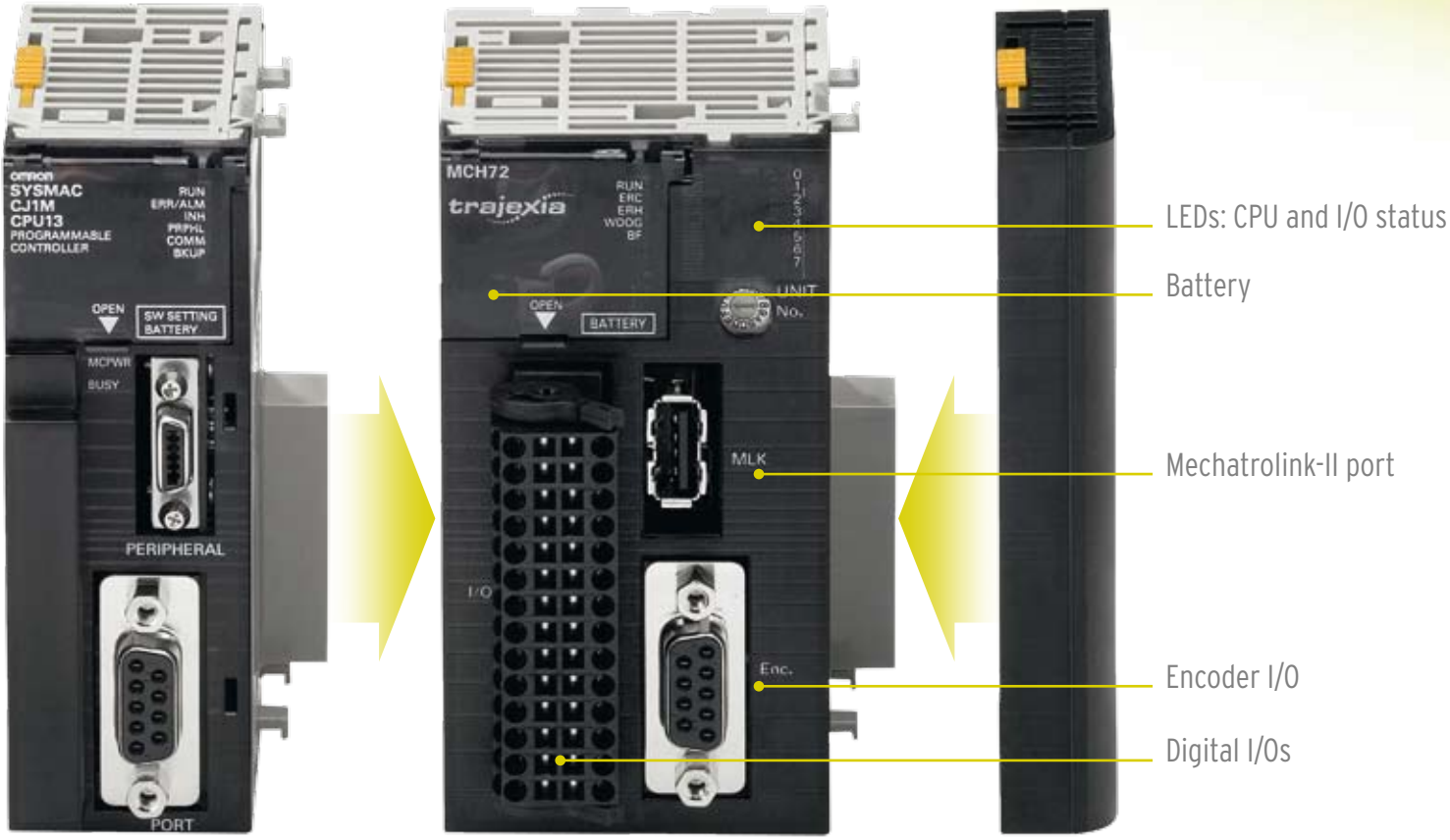

CJ1W-MCH72 - MECHATROLINK-II

Motion control unit

PLC Advanced Motion Controller Using MECHATROLINK-II Motion Bus

- 30 physical axis advanced motion coordination over a robust and fast motion link: MECHATROLINK-II
- Supports position, speed and torque control
- Each axis can run complex interpolated moves, e-cams and e-gearboxes
- Advanced debugging tools including trace and oscilloscope functions
- Hardware registration input for each servo axis
- Control of servos and inverters over a single motion network
- Built-in Digital I/Os and master Encoder.

System configuration

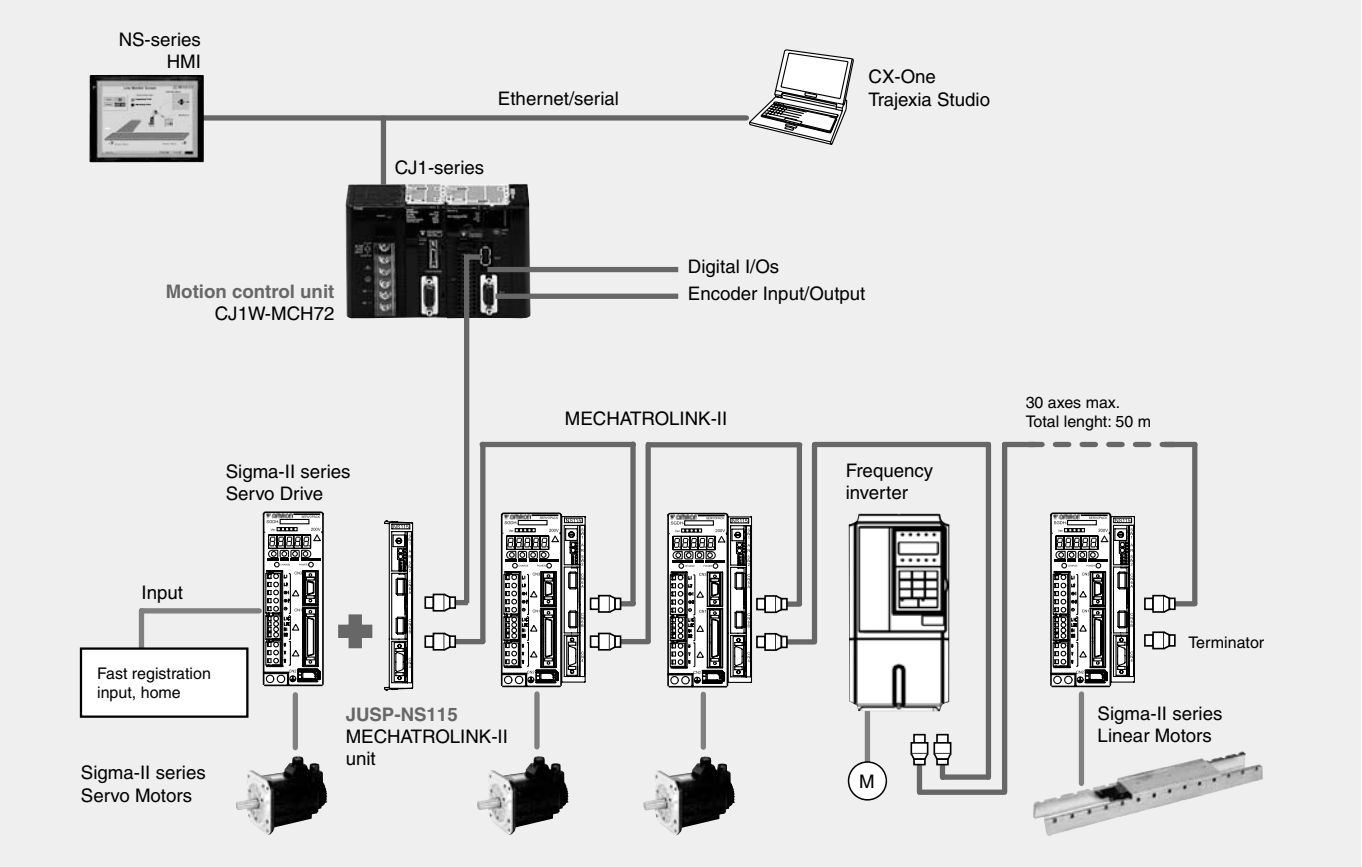

Specifications

General Specifications

Item	Details
Model	CJ1W-MCH72
Ambient operating temperature	0 to 55°C
Ambient operating humidity	90%RH (without condensation)
Storage temperature	-20º to 70º C
Atmosphere	No corrosive gases
Vibration resistance	10 to 57 Hz (0.075 mm amplitude) 57 to 100 Hz, Acceleration: 9,8 m/s2, in X Y and Z directions for 80 minutes
Shock resistance	143 m/s² , 3 times each X, Y, Z directions
Insulation resistance	20 MOhm
Dielectric strength	500 V
Protective structure	IP20
International standards	CE:IEC61131-2, IEC61000-6-2, IEC61000-6-4
	cULus: UL508C (Industrial Control Equipment)
	Lloyds; RoHS compliant

Motion Control Unit

Item		Details
Number of axes		30 (31 total with vitual axis)
Number of inverters		8 maximum (Inverters in speed or torque mode)
Cycle time		Selectable 0.5 ms, 1 ms , 2 ms or 4 ms
Programming language		BASIC-like Motion language. Same function range as Trajexia TJ1-MC16
		Note: MCH72 Trajexia uses and advanced instruction set; MCH 71 BASIC applications have to be re-designed to be used in the new controller.
Multi-tasking		Up to 14 tasks running simultaneously
Built-in Digital I/O		16 inputs, 2 with registration functionality. 8 outputs, 1 with hardware position switch functionality
Measurement units		User definable
Available memory for user programs		500KB
Data storage capacity		Up to 2 MB flash data storage
Saving program data, motion controller		SRAM with battery backup and Flash-ROM
Saving program data, personal computer		Via Trajexia Studio Software
Firmware update		Via Trajexia software tool
Encoder I/O	Position/ Speed Feedback	Incremental and Absolute encoder
	Absolute encoder standard	Supports SSI 200kHZ, EnDat 1MHz
	Encoder Input max frecuency	6 MHz
	Encoder /Pulse output max frecuency	2 MHz
MECHATROLINK-II master port	Controlled devices	Junma ML-II, Sigma-II and Sigma III servo drives and V7, F7 and G7 frequency inverters
	Electrical characteristics	Conforms to MECHATROLINK standard
	Transmission speed	10Mbps
	Stations Slave types	Axes or servodrives and frequency inverters
	Transmision distance	Max. 50 meters without using repeater
Data Echange with PLC		CJ1W-MCH72 exchanges data with memory areas in the PLC. Mapping for cyclic data exchange in the PLC CPU to memory areas in the motion unit can be freely configured.

MECHATROLINK-II, Servo drive interface unit (JUSP-NS115)

Item		Details
Type		JUSP-NS115
Applicable servo drive		SGDH-□□□E models (version 38 or later)
Installation Method		Mounted on the SGDH servo drive side: CN10.
Basic specifications	Power supply method	Supplied from the servo drive control power supply.
	Power consumption	2 W
MECHATROLINK -II communications	Baud rate/transmission cycle	10 Mbps / 1 ms or more. MECHATROLINK-II communications
Command format	Operation specification	Positioning using MECHATROLINK-I/II communications.
	Reference input	MECHATROLINK-I/II communications Commands: position, speed, torque, parameter read/write, monitor output
Position control functions	Acceleration/deceleration method	Linear first/second-step, asymmetric, exponential, S-curve
	Fully closed control	Position control with fully closed feedback is possible.
Fully closed system specifications	Encoder pulse output in the servo drive	5 V differential line-driver output (complies with EIA standard RS-422A)
	Fully closed encoder pulse signal	A quad B line-driver
	Maximum receivable frequency for servo drive	1 Mpps
	Power supply for fully closed encoder	To be prepared by customer.
Input signals in the servo drive	Signal allocation changes possible	Forward/reverse run prohibited, zero point return deceleration LS External latch signals 1, 2, 3 Forward/reverse torque control
Internal functions	Position data latch function	Position data latching is possible using phase C, and external signals 1, 2, 3
	Protection	Parameters damage, parameter setting errors, communications errors, WDT errors, fully closed encoder detecting disconnection
	LED indicators	A: alarm, R: MECHATROLINK-I/II communicating

Nomenclature

CJ1W-MCH72 - Trajexia Motion Control Unit

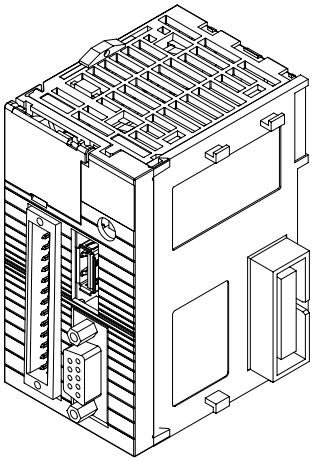

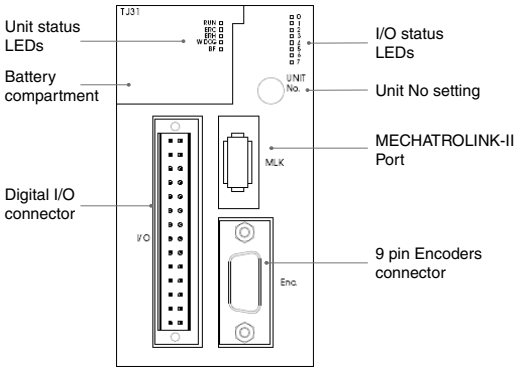

JUSP-NS115 - MECHATROLINK-II Interface Unit

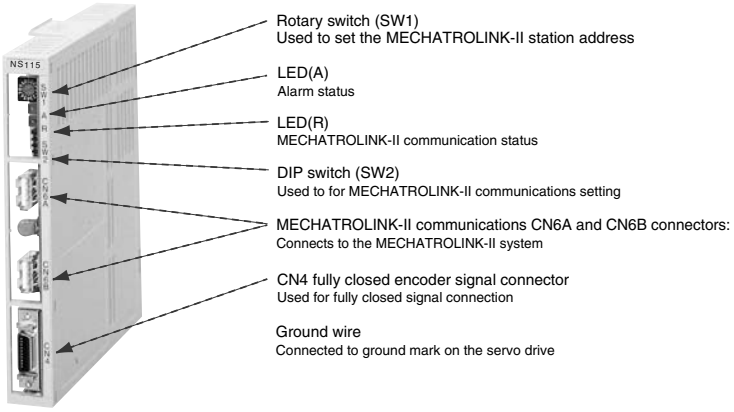

Dimensions

CJ1W-MCH72 - Trajexia Motion Control Unit

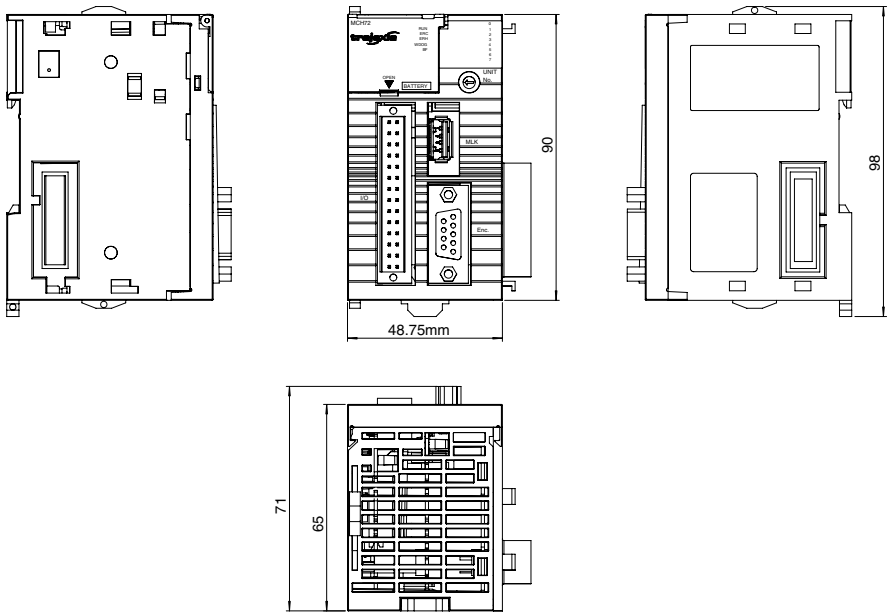

JUSP-NS115 - MECHATROLINK-II Interface

Units: mm Approx. weight: 0.2 kg

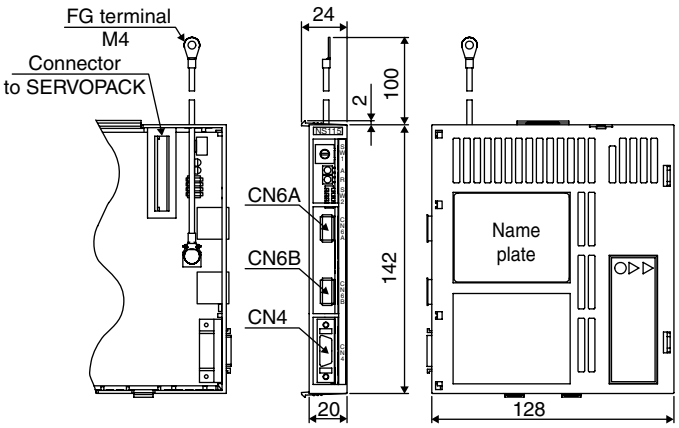

Installation

MECHATROLINK-II Interface connections

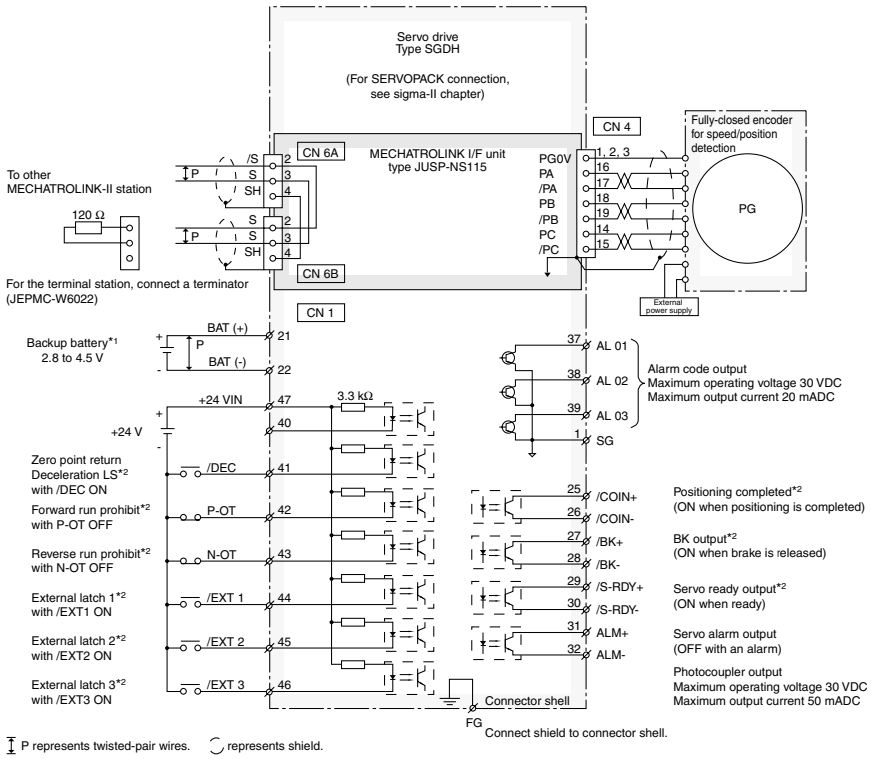

P represents twisted-pair wires. represents shield.

*1 Connect when using an absolute encoder and when the battery is not connected to CN8.

*2 Set the signal assignment with the user constants.

Ordering information

Motion controller

Name	Model
MECHATROLINK-II Trajexia motion control unit	CJ1W-MCH72

MECHATROLINK-II - related devices

Name	Remarks	Model
MECHATROLINK-II cables	0.5 meter	JEPMC-W6003-A5
	1 meter	JEPMC-W6003-01
	3 meters	JEPMC-W6003-03
	5 meters	JEPMC-W6003-05
	10 meters	JEPMC-W6003-10
	20 meters	JEPMC-W6003-20
	30 meters	JEPMC-W6003-30
MECHATROLINK-II terminator	Terminating resistor	JEPMC-W6022
MECHATROLINK-II interface units	For Sigma-II series servo drives. (Firmware version 38 or later)	JUSP-NS115
	For Varispeed V7 inverter (for inverter version support contact your OMRON sales office)	SI-T/V7
	For Varispeed F7, G7 inverter (for inverter version support contact your OMRON sales office)	SI-T
MECHATROLINK-II repeater	When 17 or more axes are connected to the MECHATROLINK-II the repeater is required	JEPMC-REP2000

Servo system

Note: Refer to servo systems section for detailed information

Frequency inverters

Note: Refer to frequency inverters section for detailed information

Computer software

Specifications	Model
Trajexia Studio V1.0 or higher (Available with CX-One license)	CX-One

ALL DIMENSIONS SHOWN ARE IN MILLIMETERS.
To convert millimeters into inches, multiply by 0.03937. To convert grams into ounces, multiply by 0.03527.

Cat. No. I54E-EN-01

OMRON EUROPE B.V. Wegalaan 67-69, NL-2132 JD, Hoofddorp, The Netherlands. Tel: +31 (0) 23 568 13 00 Fax: +31 (0) 23 568 13 88 www.industrial.omron.eu

UNITED KINGDOM
Omron Electronics Ltd
Opal Drive, Fox Milne, Milton Keynes, MK15 0DG, UK
Tel: +44 (0) 870 752 08 61
Fax: +44 (0) 870 752 08 62
www.industrial.omron.co.uk

Austria
Tel: +43 (0) 2236 377 800
www.industrial.omron.at

Belgium
Tel: +32 (0) 2 466 24 80
www.industrial.omron.be

Czech Republic
Tel: +420 234 602 602
www.industrial.omron.cz

Denmark
Tel: +45 43 44 00 11
www.industrial.omron.dk

Finland
Tel: +358 (0) 207 464 200
www.industrial.omron.fi

France
Tel: +33 (0) 1 56 63 70 00
www.industrial.omron.fr

Germany
Tel: +49 (0) 2173 680 00
www.industrial.omron.de

Hungary
Tel: +36 1 399 30 50
www.industrial.omron.hu

Italy
Tel: +39 02 326 81
www.industrial.omron.it

Netherlands
Tel: +31 (0) 23 568 11 00
www.industrial.omron.nl

Norway
Tel: +47 (0) 22 65 75 00
www.industrial.omron.no

Poland
Tel: +48 (0) 22 645 78 60
www.industrial.omron.pl

Portugal
Tel: +351 21 942 94 00
www.industrial.omron.pt

Russia
Tel: +7 495 648 94 50
www.industrial.omron.ru

South-Africa
Tel: +27 (0)11 579 2600
www.industrial.omron.co.za

Spain
Tel: +34 913 777 900
www.industrial.omron.es

Sweden
Tel: +46 (0) 8 632 35 00
www.industrial.omron.se

Switzerland
Tel: +41 (0) 41 748 13 13
www.industrial.omron.ch

Turkey
Tel: +90 216 474 00 40
www.industrial.omron.com.tr

More Omron representatives
www.industrial.omron.eu

Authorised Distributor:

Control Systems
• Programmable logic controllers • Human-machine interfaces • Remote I/O

Motion & Drives
• Motion controllers • Servo systems • Inverters

Control Components
• Temperature controllers • Power supplies • Timers • Counters • Programmable relays
• Digital panel indicators • Electromechanical relays • Monitoring products • Solid-state relays
• Limit switches • Pushbutton switches • Low voltage switch gear

Sensing & Safety
• Photoelectric sensors • Inductive sensors • Capacitive & pressure sensors
• Cable connectors • Displacement & width-measuring sensors • Vision systems
• Safety networks • Safety sensors • Safety units/relay units • Safety door/guard lock switches

KPP_Trajexia_PLC_EN01

Although we strive for perfection, Omron Europe BV and/or its subsidiary and affiliated companies do not warrant or make any representations regarding the correctness or completeness of the information described in this document. We reserve the right to make any changes at any time without prior notice.